GRAND STRAND WATER AND SEWER AUTHORITY
CONWAY WWTP
4.0 MGD EXPANSION AND UPGRADE

GSWSA PROJECT NO 8 39-01
SRF PROJECT NO 381-59

CONTRACT 1 - GENERAL CONSTRUCTION
AUGUST 2001

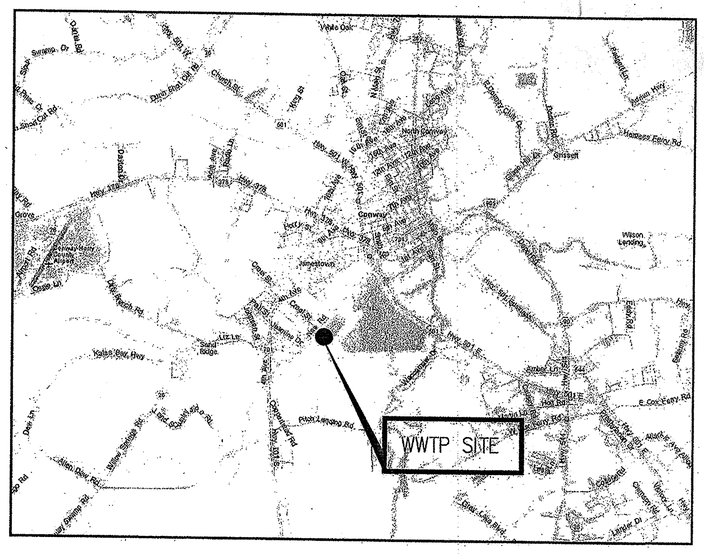

LOCATION MAP

GRAND STRAND
WATER & SEWER
AUTHORITY

HAZEN AND SAWYER
Environmental Engineers & Scientists

SOUTH CAROLINA REGISTERED PROFESSIONAL ENGINEER No.18971 DONALD L. TAYLOR 11/16/01

SOUTH CAROLINA REGISTERED PROFESSIONAL ENGINEER No.10488 JOSEPH B. MECKS 11/16/01

AS BUILT
5/16/03
35-004-001

ISSUED FOR CONSTRUCTION
BY JBM DATE 11/16/01

ABBREVIATIONS

AB	ANCHOR BOLT
AC	ALTERNATING CURRENT/ ASBESTOS CEMENT
ACT	ACOUSTIC TILE
AD	AREA DRAIN
ADJ	ADJUSTABLE
AFF	ABOVE FINISHED FLOOR
AGGR	AGGREGATE
AL	ALUMINUM
ALLOW	ALLOWANCE/ALLOWABLE
ALT	ALTERNATE
APPROX	APPROXIMATE
ARCH	ARCHITECTURAL
ASB	ASBESTOS
ASPH	ASPHALT
AT	ASPHALT TILE
B	BORING
BD	BOARD
BFE	BOTTOM OF FITTING ELEV
BFV	BUTTERFLY VALVE
BITUM	BITUMINOUS
℄	BASELINE
BL	BUILDING LINE
BLDG	BUILDING
BLK	BLOCK
BM	BENCH MARK
BOC	BACK OF CURB
BOT	BOTTOM
BRG	BEARING
BRK	BRICK
BRZ	BRONZE
BSMT	BASEMENT
BT	BOLT
BUR	BUILT-UP ROOFING
BV	BALL VALVE
C	CLOSET/CARPET/CHANNEL
CAB	CABINET
CB	CATCH BASIN
C/C	CENTER TO CENTER
CE	CONSTRUCTION EASEMENT
CEM	CEMENT
CER	CERAMIC
CF	CUBIC FEET
CFM	CUBIC FEET PER MINUTE
CI	CAST IRON/CUBIC INCHES
CIP	CAST IRON PIPE
℄	CENTER LINE
CL_2	CHLORINE
CLG	CEILING
CLKG	CAULKING
CLR	CLEAR
CMP	CORRUGATED METAL PIPE
CMU	CONCRETE MASONRY UNIT
CO	CLEANOUT
COL	COLUMN
CONC	CONCRETE
CONST	CONSTRUCTION
CONT	CONTINUOUS
CONTR	CONTRACTOR
CORP	CORPORATION
CORR	CORRIDOR
CP	CONCRETE PLANK
CRS	COURSE
CT	CERAMIC TILE
CTJ	CONTROL JOINT
CU	COPPER
CV	CHECK VALVE
CW	COLD WATER
CY	CUBIC YARD
DC	DIRECT CURRENT
DET	DETAIL
DF	DRINKING FOUNTAIN
DIA (ø)	DIAMETER
DIAG	DIAGONAL
DIM	DIMENSION
DIP	DUCTILE IRON PIPE
DISCH	DISCHARGE
DIST	DISTRIBUTION
DJ	DOUBLE JOIST
DL	DEAD LOAD
DN	DOWN
DOZ	DOZEN
DR	DOOR
DWG	DRAWING
DWL	DOWEL
E	EAST/EASEMENT
EA	EACH
ECC	ECCENTRIC
EF	EACH FACE
EFF	EFFLUENT
EIP	EXIST IRON PIPE
EL	ELEVATION
ELEC	ELECTRIC/ELECTRICAL
ELL	ELBOW
ENGR	ENGINEER
ENT	ENTRANCE
EOG	EDGE OF GRAVEL
EOP	EDGE OF PAVEMENT
EQ	EQUAL
EQPT	EQUIPMENT
EW	EACH WAY
EX	EXISTING
EXC	EXCAVATE
EXH	EXHAUST
EXP	EXPANSION
EXT	EXTERIOR
FAB	FABRICATE
F&C	FRAME AND COVER
F&G	FRAME AND GRATE
FC	FLUSHING CONNECTION
FD	FLOOR DRAIN
FDN	FOUNDATION
FE	FIRE EXTINGUISHER
FF	FINISH FLOOR
FH	FIRE HYDRANT
FIN	FINISH
FIX	FIXTURE
FL	FLASHING/FLOOR
FLEX	FLEXIBLE
FLG	FLANGE
FLUOR	FLUORESCENT
FLXC	FLEXIBLE CONNECTION
FM	FORCE MAIN
FPRF	FIREPROOF
FRP	FIBERGLASS REINFORCED POLYESTER LAMINATE
FT	FEET
FTG	FOOTING/FITTING
FURR	FURRING/FURRED
G	GAS/GAS LINE
GA	GAUGE
GAL	GALLON
GALV	GALVANIZED
GC	GENERAL CONTRACTOR
GEN	GENERATOR
GI	GALVANIZED IRON
GL	GLASS
GPM	GALLONS PER MINUTE
GR	GRADE
GV	GATE VALVE
GW	GUY WIRE
GWB	GYPSUM WALL BOARD
GWF	GLAZED WALL FINISH
GYP	GYPSUM
H	HEIGHT
HDW	HARDWARE
HEX	HEXAGONAL
HM	HOLLOW METAL
HORZ	HORIZONTAL
HP	HORSEPOWER
HPT	HIGH POINT
HTR	HEATER
HVAC	HEATING,VENTILATION AND AIR CONDITIONING
HW	HOT WATER
HWL	HIGH WATER LEVEL
HWY	HIGHWAY
HYD	HYDRAULIC
I	IRON
ID	INSIDE DIAMETER
IF	INSIDE FACE
IN	INCH
INCL	INCLUDED
INF	INFLUENT
INS	INSULATION
INT	INTERIOR
INV	INVERT
J	JOIST
JB	JUNCTION BOX
JCT	JUNCTION
JT	JOINT
L	LENGTH/ANGLE
LA	LINE AHEAD
LAB	LABORATORY
LAM	LAMINATED
LAT	LATERAL
LAV	LAVATORY
LB	POUND/LINE BACK
LF	LINEAR FEET
LG	LONG
LL	LIVE LOAD
LLH	LONG LEG HORIZONTAL
LLV	LONG LEG VERTICAL
LP	LIGHT POLE
LPT	LOW POINT
LT	LIGHT
LTG	LIGHTING
LVR	LOUVER
LWL	LOW WATER LEVEL
MAINT	MAINTENANCE
MATL	MATERIAL
MAX	MAXIMUM
MECH	MECHANICAL
MEMB	MEMBRANE
MET	METAL
MFR	MANUFACTURER
MG	MILLION GALLONS
MGD	MILLION GALLONS PER DAY
MH	MANHOLE
MIN	MINIMUM
MISC	MISCELLANEOUS
MJ	MECHANICAL JOINT
MLDG	MOLDING
MO	MASONRY OPENING
MOD	MODIFY/MODIFIED
MON	MONUMENT
MOT	MOTOR
MOV	MOTOR OPERATED VALVE
MTD	MOUNTED
MTG	MOUNTING
MULT	MULTIPLE
N	NORTH
NA	NOT APPLICABLE
NF	NEAR FACE
NIC	NOT IN CONTRACT
NO	NUMBER
NOM	NOMINAL
NPW	NON POTABLE WATER
NTS	NOT TO SCALE
OC	ON CENTER
OD	OUTSIDE DIAMETER
OF	OUTSIDE FACE
OFF	OFFICE
OPER	OPERATOR
OPNG	OPENING
OPP	OPPOSITE
ORIG	ORIGINAL
OT	OPEN TRUSS
OVHD	OVERHEAD
PAR	PARALLEL
PC	POINT OF CURVE/PIECE
PCC	POINT OF COMPOUND CURVE
PCF	POUNDS PER CUBIC FOOT
PE LINING	POLYETHYLENE LINING
PERF	PERFORATED
PERP	PERPENDICULAR
PI	POINT OF INTERSECTION
ℙ	PROPERTY LINE/PLATE
PNL	PANEL
PP	POWER POLE
PREFAB	PREFABRICATED
PRV	PRESSURE RELIEF VALVE
PS	PUMPING STATION
PSF	POUNDS PER SQUARE FOOT
PSI	POUNDS PER SQUARE INCH
PT	POINT OF TANGENT/POINT
PTN	PARTITION
PV	PLUG VALVE
PVC	POLYVINYL CHLORIDE
PVMT	PAVEMENT
PW	POTABLE WATER
QTY	QUANTITY
R	RADIUS/RISER
RCP	REINFORCED CONCRETE PIPE
RD	ROAD/ROOF DRAIN
RECIR	RECIRCULATION
RECP	RECEPTACLE
RECT	RECTANGULAR
RED	REDUCER
REF	REFERENCE
REG	REGISTER
REINF	REINFORCING
REM	REMOVE
REQD	REQUIRED
REST	RESTRAINED
REV	REVISE
RF	ROOF
RFG	ROOFING
RJ	RESTRAINED JOINT
RM	ROOM
RND	ROUND
RO	ROUGH OPENING
RPM	REVOLUTIONS PER MINUTE
RR	RAILROAD
RT	RIGHT
RTU	REMOTE TERMINAL UNIT
RW	RAW WATER
R/W	RIGHT OF WAY
S	SOUTH/SLOPE
SAN	SANITARY
SBL	SURVEY BASELINE
SCH	SCHEDULE
SD	STORM/SITE DRAIN
SECT	SECTION
SERV	SERVICE
SEW	SEWER
SF	SQUARE FEET
SHT	SHEET
SI	SQUARE INCH
SIM	SIMILAR
SJ	STEEL JOIST
SPEC	SPECIFICATION
SQ	SQUARE
SS	SANITARY SEWER
SST	STAINLESS STEEL
ST	STREET
STA	STATION
STD	STANDARD
STG	STORAGE
STIR	STIRRUP
STL	STEEL
STR	STRUCTURAL
SUB	SUBSTITUTE
SUP	SUPPLY
SUPT	SUPERINTENDENT
SUR	SURFACE
SUSP	SUSPENDED
SW	SWITCH
SWBD	SWITCHBOARD
SWD	SIDE WATER DEPTH
SYM	SYMMETRICAL
T	TREAD
T&B	TOP AND BOTTOM
T&G	TONGUE AND GROOVE
TAN	TANGENT
TBM	TEMPORARY BENCH MARK
TC	TOP OF CURB
TDH	TOTAL DYNAMIC HEAD
TECH	TECHNICAL
TEL	TELEPHONE
TEMP	TEMPERATURE
TER	TERRAZZO
THERMO	THERMOSTAT
THK	THICK
THRU	THROUGH
TOD	TOP OF DECK
TOF	TOP OF FOOTING
TOM	TOP OF MASONRY/MANHOLE
TOS	TOP OF SLAB
TOW	TOP OF WALL
TOL	TOLERANCE
TPS	TWISTED PAIR SHIELDED
TRANS	TRANSFORMER
TYP	TYPICAL
UG	UNDERGROUND
UH	UNIT HEATER
UNFIN	UNFINISHED
UNO	UNLESS NOTED OTHERWISE
UR	URINAL
UTIL	UTILITY
VAC	VACUUM
VAT	VINYL ASBESTOS TILE
VCP	VITRIFIED CLAY PIPE
VEL	VELOCITY
VENT	VENTILATING/VENTILATION
VERT	VERTICAL
VOL	VOLUME
VP	VENT PIPE
VWC	VINYL WALL COVERING
W	WEST/WIDTH
W/	WITH
WC	WATER CLOSET
WF	WIDE FLANGE
WH	WALL HYDRANT
WI	WROUGHT IRON
WL	WATER LEVEL
W/L	WATER LINE
WO	WINDOW OPENING
W/O	WITHOUT
WP	WATERPROOF
WPFG	WATER PROOFING
WPT	WALL PENETRATING TYPE
WSE	WATER SURFACE ELEVATION
WSP	WEATHERSTRIP
WT	WEIGHT
WV	WATER VALVE
WWF	WELDED WIRE FABRIC
YD	YARD
YR	YEAR

PROCESS PIPE DESIGNATIONS

A	AIR
BW	BACKWASH
CD	CHEMICAL DRAIN
CEN	CENTRATE
CLS	CHLORINE SOLUTION
CW	CITY WATER
D	DRAIN
DG	DIGESTER GAS
DP	DRY POLYMER
DS	DIGESTED SLUDGE
FD	FLOOR DRAIN
FE	FINAL EFFLUENT
FOR	FUEL OIL RETURN
FOS	FUEL OIL SUPPLY
HOCL	SODIUM HYPOCHLORITE
HWR	HOT WATER RETURN
HWS	HOT WATER SUPPLY
ICR	INTERCOOLER RETURN
ICS	INTERCOOLER SUPPLY
IR	IRRIGATION
JWR	JACKET WATER RETURN
JWS	JACKET WATER SUPPLY
LPL	LIQUID POLYMER
ML	MIXED LIQUOR
MLW	MIXED LIQUOR WASTE
NPW	NON-POTABLE WATER
PCE	PRIMARY CLARIFIER EFFLUENT
PD	PROCESS DRAIN
PI	PLANT INFLUENT
PLS	POLYMER SOLUTION
PS	PRIMARY SLUDGE
PT	PRELIMINARY TREATMENT
PTE	PRELIMINARY TREATMENT EFFLUENT
PW	POTABLE WATER
RAS	RETURN ACTIVATED SLUDGE
RD	ROOF DRAIN
RS	RAW SEWAGE
S	SAMPLE
SA	SERVICE AIR
SBD	STRAINER BACKWASH DISCHARGE
SBS	SODIUM BISULFITE
SC	SCUM
SCE	SECONDARY CLARIFIER EFFLUENT
SD	STORM DRAIN
SL	SLUDGE
SPD	SUMP PUMP DISCHARGE
SS	SANITARY SEWER
SW	SEAL WATER
TMW	THICKENER MAKE-UP WATER
THO	THICKENER OVERFLOW
THS	THICKENED SLUDGE
V	VENT
WAS	WASTE ACTIVATED SLUDGE
W1	POTABLE WATER
W2	POTABLE WATER WITH BACKFLOW PREVENTER
W3	NON POTABLE WATER

INDEX OF DRAWINGS

LEGEND

MATERIALS

GRADE OR EARTH
ASPHALT PAVING
SAND
GRAVEL
CONCRETE
CONC. FILL OR GROUT
CONC. MASONRY UNIT
BRICK
ROCK
STEEL
INSULATION
WATER SURFACE
GRATING
CHECKERED PLATE
GLASS
WOOD BLOCKING

SYMBOLS

GATE VALVE
BUTTERFLY VALVE
PLUG VALVE
SWING CHECK VALVE
GLOBE VALVE
PINCH VALVE
DIAPHRAGM VALVE
BALL VALVE
BALL CHECK VALVE
HARNESSED FLANGED ADAPTER
HARNESSED SLEEVE TYPE COUPLING
SLEEVE TYPE COUPLING
HARNESSED FLEXIBLE COUPLING
WALL PENETRATION
MECHANICAL COUPLING
WELDED JOINT
FLANGED JOINT
MECHANICAL, PUSH ON OR RESTRAINED JOINT
SLUICE GATE
SLIDE GATE/STOP GATE
FLUSHING CONNECTION
HOSE BIBB
QUICK DISCONNECT FITTING
YARD HYDRANT
FIRE HYDRANT
SOIL BORING

SECTION AND DETAIL KEYING

DRAWINGS ARE CROSS REFERENCED IN THE FOLLOWING METHOD:

(A) A SECTION CUT ON DRAWING A3 IS IDENTIFIED AS FOLLOWS:

A / A6 — SECTION LETTER / DRAWING WHERE SECTION IS SHOWN

(B) THE SECTION SHOWN ON DRAWING A6 IS IDENTIFIED AS FOLLOWS:

A / A3 — SECTION LETTER / DRAWING FROM WHERE SECTION WAS TAKEN

DETAILS ARE CROSS REFERENCED IN A SIMILAR MANNER, EXCEPT DETAILS ARE IDENTIFIED BY A SQUARE WITH A NUMBER IN THE UPPER HALF.

STANDARD DETAILS ARE REFERENCED BY A UNIQUE SEVEN DIGIT NUMBER AND ARE SHOWN ON THE CONTRACT DRAWINGS BY ONE OF TWO METHODS:

1509203 — REFERENCED ITEM

OR:

SEE 1509203 — REFERENCED ITEM

STANDARD DETAILS ARE COMPILED IN APPROXIMATE NUMERICAL ORDER IN THE BACK OF THE CONTRACT DRAWINGS ON THE D* DRAWINGS.

LINETYPES

PROPOSED ITEMS
EXISTING ITEMS
HIDDEN ITEMS
DEMOLITION ITEMS
CENTER LINE
MATCH LINE
SILT FENCE

NO.	ISSUED FOR	DATE	BY
2	CONSTRUCTION	4/16/01	JBM
1	REGULATORY APPROVAL	8-31-01	JBM

DESIGNED JBM
DRAWN JTB
CHECKED JBM
PROJ. ENGR. JBM
APPROVED RLT

SOUTH CAROLINA REGISTERED PROFESSIONAL ENGINEER No. 10261 RONALD L. TAYLOR 11/16/01

SOUTH CAROLINA REGISTERED PROFESSIONAL ENGINEER No. 10488 JOSEPH B. MEEKS JR. 11/16/01

HAZEN AND SAWYER
Environmental Engineers & Scientists
4011 WestChase Blvd, Raleigh, North Carolina 27607

GRAND STRAND WATER AND SEWER AUTHORITY
SOUTH CAROLINA

CONWAY WWTP
4.0 MGD EXPANSION AND UPGRADE

GENERAL
INDEX, ABBREVIATIONS AND LEGEND

THE SCALE BAR SHOWN BELOW MEASURES ONE INCH LONG ON THE ORIGINAL DRAWING.

DATE AUGUST 2001
H & S JOB NUMBER 30631
CONTRACT NUMBER 1
DRAWING NUMBER X1
H&S FLAT FILE NO. 56

7/26/01

35-009-002

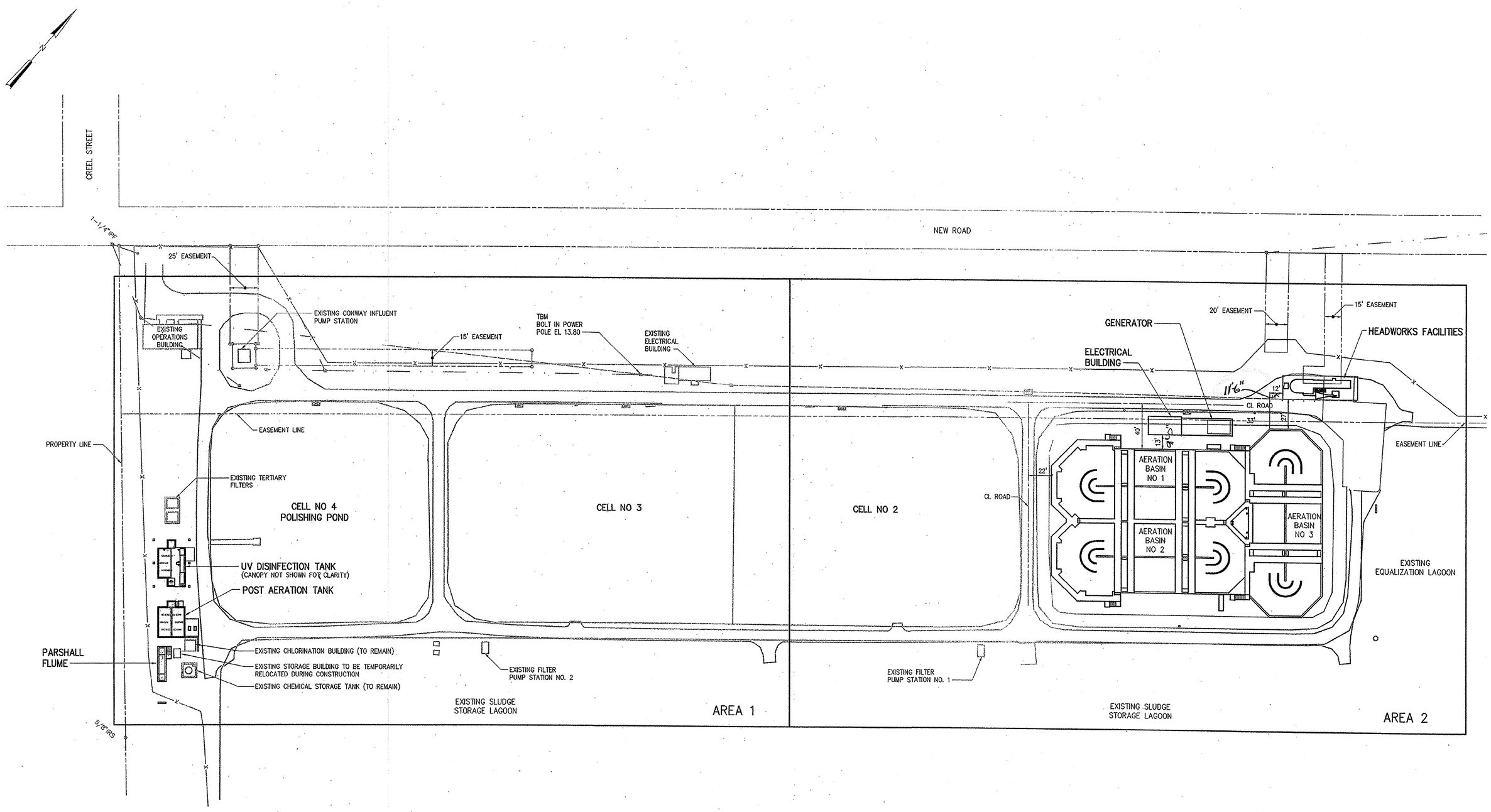

SITE PLAN

1" = 40'

NO.	ISSUED FOR	DATE	BY
2	CONSTRUCTION	11/16/01	JBM
1	REGULATORY APPROVAL	8-31-01	JBM

2001

DESIGNED JBM
DRAWN JTB
CHECKED JBM
PROJ. ENGR. JBM
APPROVED

SOUTH CAROLINA REGISTERED PROFESSIONAL ENGINEER No.10512 RONALD L. TAYLOR 11/16/01

SOUTH CAROLINA REGISTERED PROFESSIONAL ENGINEER No.10488 JOSEPH B. MEEKS, JR. 11/16/01

HAZEN AND SAWYER
Environmental Engineers & Scientists
4011 WestChase Blvd, Raleigh, North Carolina 27607

GRAND STRAND WATER AND SEWER AUTHORITY
SOUTH CAROLINA

CONWAY WWTP
4.0 MGD EXPANSION AND UPGRADE

SITE WORK
GENERAL
OVERALL SITE PLAN AND STAKING PLAN

THE SCALE BAR SHOWN BELOW MEASURES ONE INCH LONG ON THE ORIGINAL DRAWING.

DATE AUGUST 2001
H & S JOB NUMBER 30631
CONTRACT NUMBER 1
DRAWING NUMBER G1
H&S FLAT FILE NO. 56

35-001-003

NOTES:

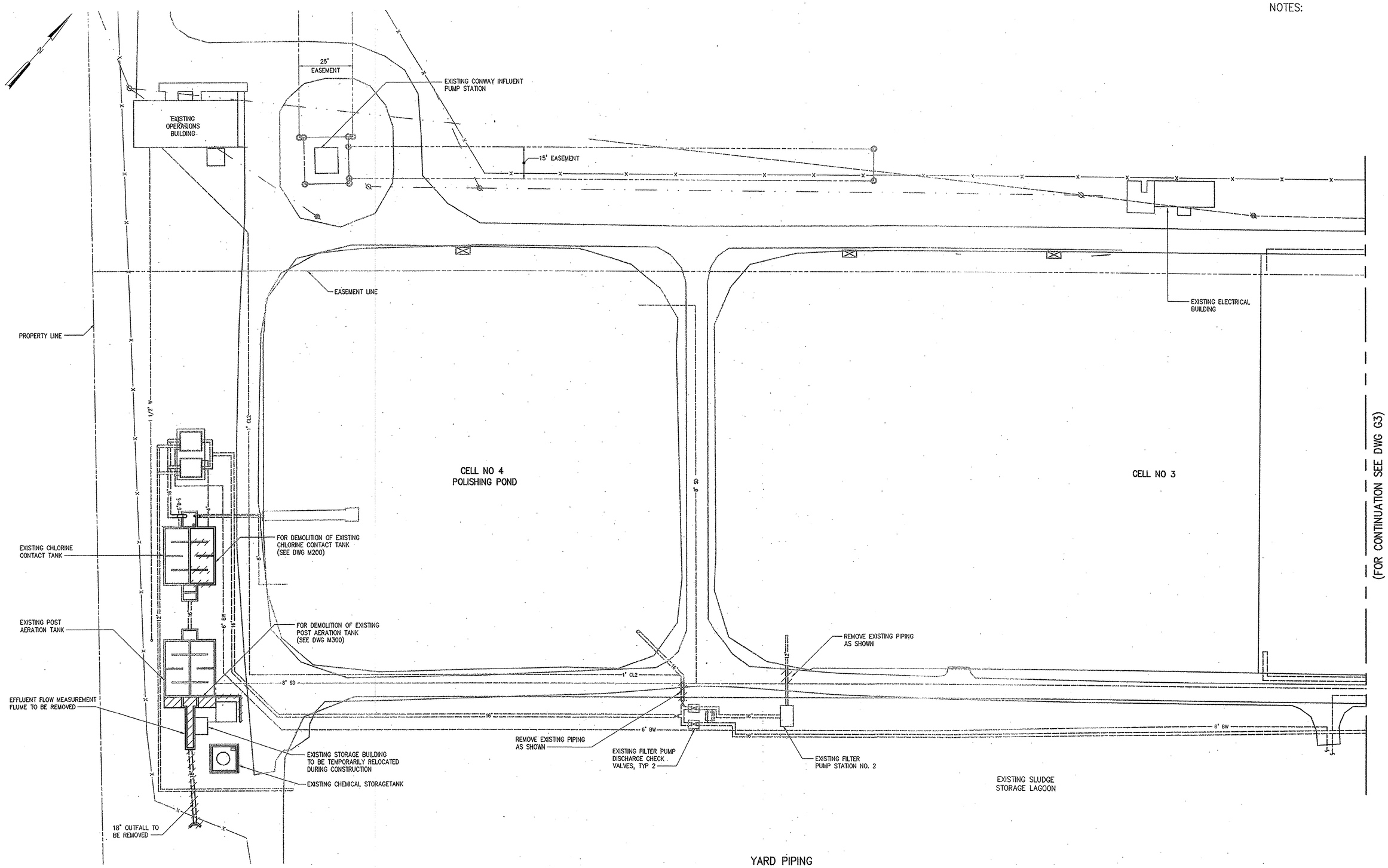

YARD PIPING

1"= 20'

NO.	ISSUED FOR	DATE	BY
2	CONSTRUCTION	11/16/01	JBM
1	REGULATORY APPROVAL	8-31-01	JBM

2001

DESIGNED JBM
DRAWN JTB
CHECKED JBM
PROJ. ENGR. JBM
APPROVED

SOUTH CAROLINA REGISTERED PROFESSIONAL ENGINEER No.06512 RONALD L. TAYLOR 11/16/01

SOUTH CAROLINA REGISTERED PROFESSIONAL ENGINEER No.10488 JOSEPH B. MEEKS 11/16/01

HAZEN AND SAWYER
Environmental Engineers & Scientists
4011 WestChase Blvd, Raleigh, North Carolina 27607

GRAND STRAND WATER AND SEWER AUTHORITY
SOUTH CAROLINA

CONWAY WWTP
4.0 MGD EXPANSION AND UPGRADE

SITE WORK
GENERAL
AREA 1
DEMOLITION PLAN

THE SCALE BAR SHOWN BELOW MEASURES ONE INCH LONG ON THE ORIGINAL DRAWING.

DATE AUGUST 2001
H & S JOB NUMBER 30631
CONTRACT NUMBER 1
DRAWING NUMBER G2
H&S FLAT FILE NO. 56

35-004-004

NOTES:

1 CONTRACTOR SHALL REMOVE EXISTING ASPHALT DRIVE AND CONCRETE DRIVE FOR THE HEADWORKS CONCRETE SLAB.

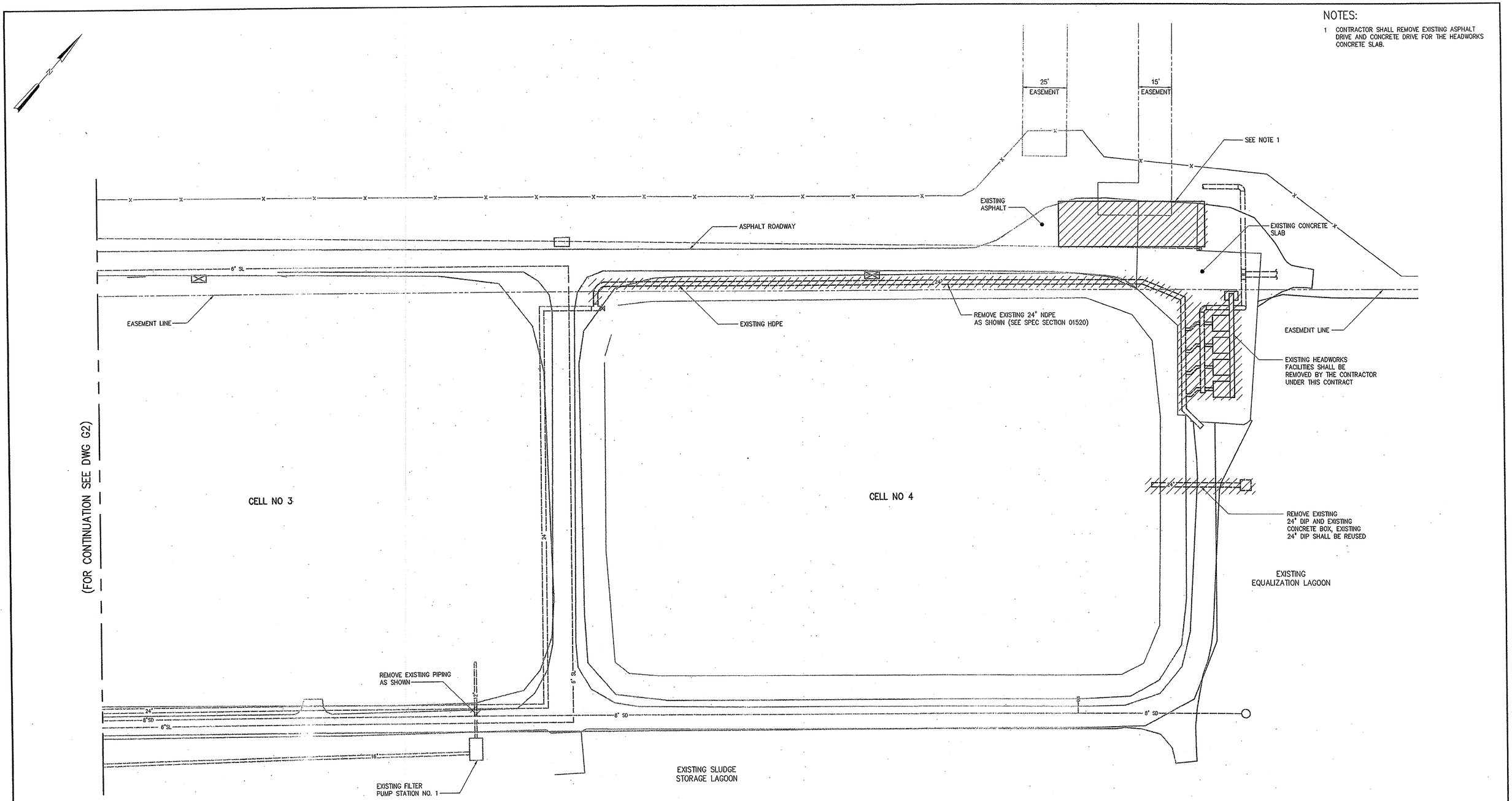

YARD PIPING

1" = 20'

NO.	ISSUED FOR	DATE	BY
2	CONSTRUCTION	11/16/01	JBM
1	REGULATORY APPROVAL	8-31-01	JBM

DESIGNED JBM
DRAWN JTB
CHECKED JBM
PROJ. ENGR. JBM
APPROVED

SOUTH CAROLINA REGISTERED PROFESSIONAL ENGINEER No. 16512 RONALD L. TAYLOR 11/16/01

SOUTH CAROLINA REGISTERED PROFESSIONAL ENGINEER No. 10488 JOSEPH B. MEEKS 11/16/01

HAZEN AND SAWYER
Environmental Engineers & Scientists
4011 WestChase Blvd, Raleigh, North Carolina 27607

GRAND STRAND WATER AND SEWER AUTHORITY
SOUTH CAROLINA

CONWAY WWTP
4.0 MGD EXPANSION AND UPGRADE

SITE WORK
GENERAL
AREA 2
DEMOLITION PLAN

THE SCALE BAR SHOWN BELOW MEASURES ONE INCH LONG ON THE ORIGINAL DRAWING.

DATE AUGUST 2001
H & S JOB NUMBER 30631
CONTRACT NUMBER 1
DRAWING NUMBER G3
H&S FLAT FILE NO. 56

2001

35-004-005

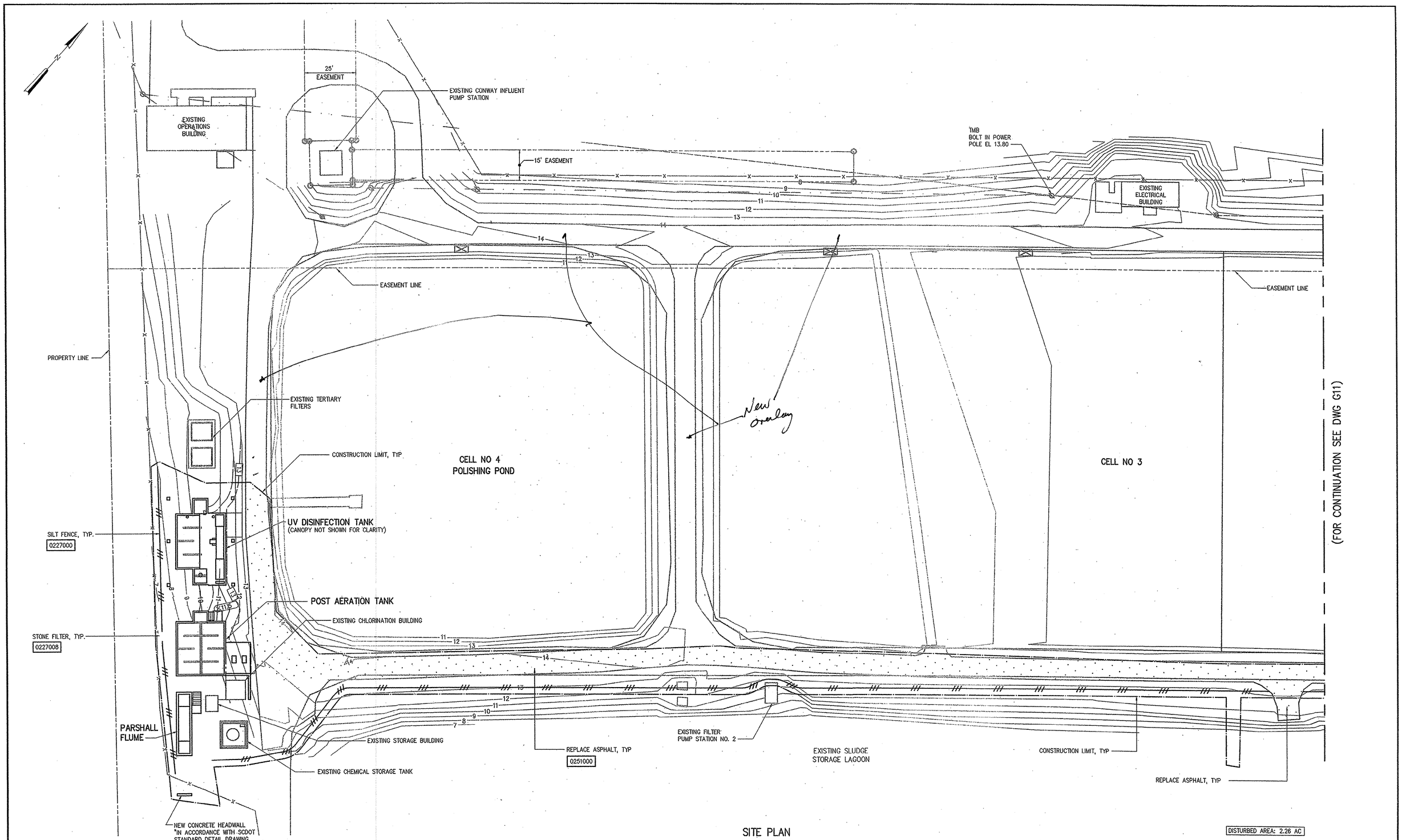

SITE PLAN

1"= 20'

NO.	ISSUED FOR	DATE	BY
2	CONSTRUCTION	11/16/01	JBM
1	REGULATORY APPROVAL	8-31-01	JBM

DESIGNED JTC
DRAWN JTC
CHECKED JBM
PROJ. ENGR. JBM
APPROVED

SOUTH CAROLINA PROFESSIONAL ENGINEER No. 16662 RONALD L. TAYLOR 11/16/01

SOUTH CAROLINA REGISTERED PROFESSIONAL ENGINEER No.10488 JOSEPH B. MEEKS 11/16/01

HAZEN AND SAWYER
Environmental Engineers & Scientists
4011 WestChase Blvd, Raleigh, North Carolina 27607

GRAND STRAND WATER AND SEWER AUTHORITY
SOUTH CAROLINA

CONWAY WWTP
4.0 MGD EXPANSION AND UPGRADE

SITE WORK
GENERAL
AREA 1
GRADING AND EROSION CONTROL

THE SCALE BAR SHOWN BELOW MEASURES ONE INCH LONG ON THE ORIGINAL DRAWING.

DATE AUGUST 2001
H & S JOB NUMBER 30631
CONTRACT NUMBER 1
DRAWING NUMBER G10
H&S FLAT FILE NO. 56

11/01/01 3:06pm FILE= H:\30631\GEN\G010 by EWNG XREFs=MISC\30631-TB, 00\SP-ST, 00\SP-TP, 00\SP-EC, 00\SP-TP-PR, 00\PS-TP,

35-004-006

NOTES:

1 ALL AREAS SHALL BE GRADED SO AS TO ENSURE POSITIVE DRAINAGE OF STORMWATER RUNOFF. AREAS SHOWING PONDING OF STORMWATER SHALL BE RE-GRADED TO DRAIN PROPERLY.

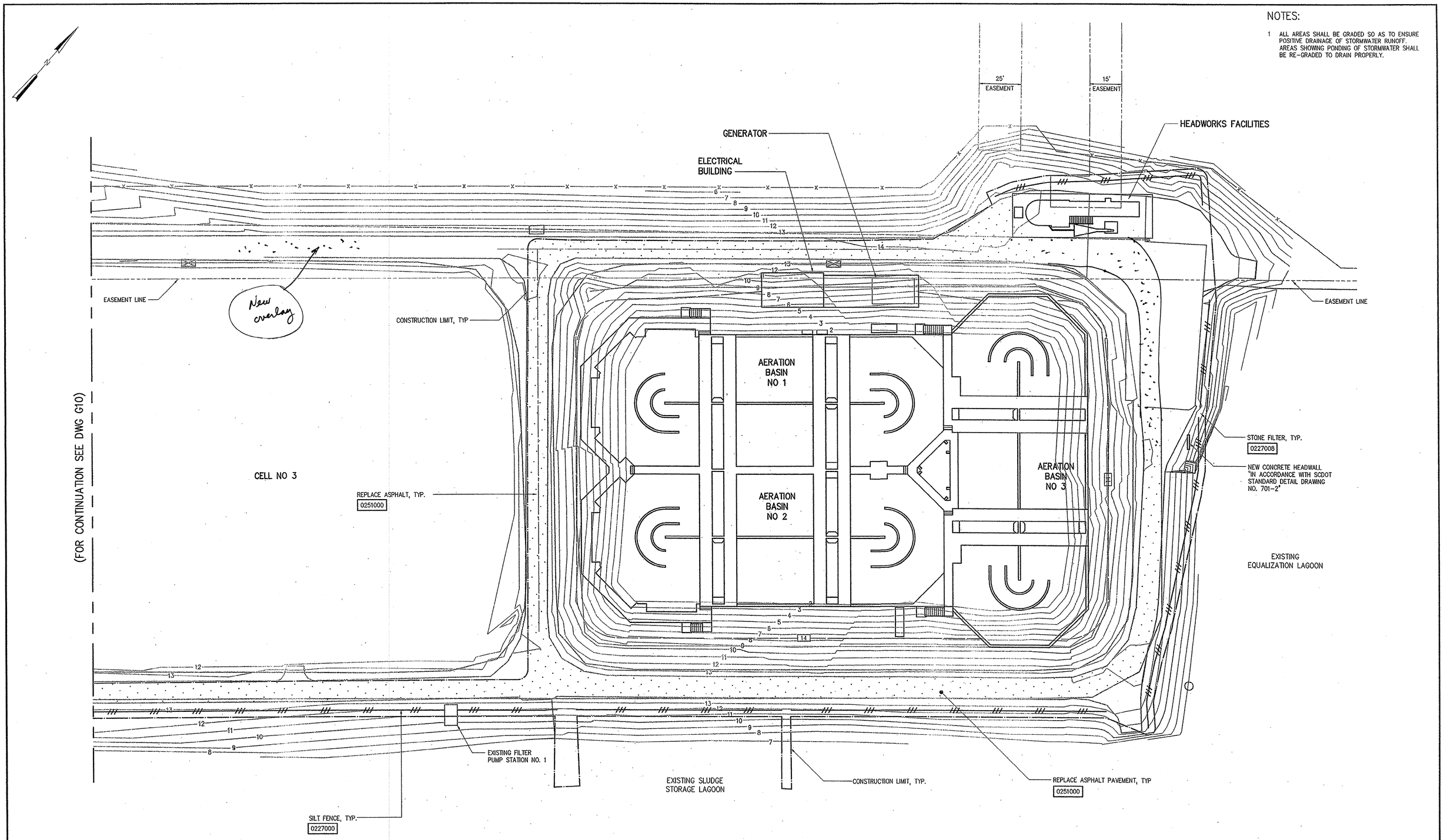

SITE PLAN

1" = 20'

DISTURBED AREA: 2.26 AC

NO.	ISSUED FOR	DATE	BY
2	CONSTRUCTION	11/16/01	JBM
1	REGULATORY APPROVAL	8-31-01	JBM

DESIGNED JTC
DRAWN JTC
CHECKED JBM
PROJ. ENGR. JBM
APPROVED

SOUTH CAROLINA PROFESSIONAL ENGINEER REG. No. 16631 RONALD L. TAYLOR 11/16/01

SOUTH CAROLINA REGISTERED PROFESSIONAL ENGINEER No. 10488 JOSEPH B. MEEKS 11/16/01

HAZEN AND SAWYER
Environmental Engineers & Scientists
4011 WestChase Blvd, Raleigh, North Carolina 27607

GRAND STRAND WATER AND SEWER AUTHORITY
SOUTH CAROLINA

CONWAY WWTP
4.0 MGD EXPANSION AND UPGRADE

SITE WORK
GENERAL
AREA 2
GRADING AND EROSION CONTROL

THE SCALE BAR SHOWN BELOW MEASURES ONE INCH LONG ON THE ORIGINAL DRAWING.

DATE AUGUST 2001
H & S JOB NUMBER 30631
CONTRACT NUMBER 1
DRAWING NUMBER G11
H&S FLAT FILE NO. 56

11/01/01 3:07pm FILE= H:\30631\GEN\G011 by EWNG XREFs=MISC\30631-TB, 00\SP-ST, 00\SP-TP, 00\SP-TP-PR, 00\SP-EC, 00\PS-TP,

35-009-007

CONDITION	PLANT FLOW	BAR SCREEN CHANNEL	INFLUENT PARSHALL FLUME	GRIT CLASSIFIER	DROP BOX		PRIMARY DISTRIBUTION CHANNEL	OXIDATION DITCHES	SECONDARY EFFLUENT CHANNEL		EXISTING POLISHING TANK (1 FOOT FREEBOARD IN POLISHING POND) (UTILIZING ONLY THE 16" LINE)	
MAXIMUM DESIGN FLOW	10 MGD	24.28	23.75	20.90	19.60		17.46	16.84	15.36		ELEV. 12.50 @ 2.39 MGD	
AVERAGE DESIGN FLOW	4 MGD	23.13	22.62	18.34	17.55		17.19	16.67	14.79		ELEV. 12.50 @ 5.18 MGD	

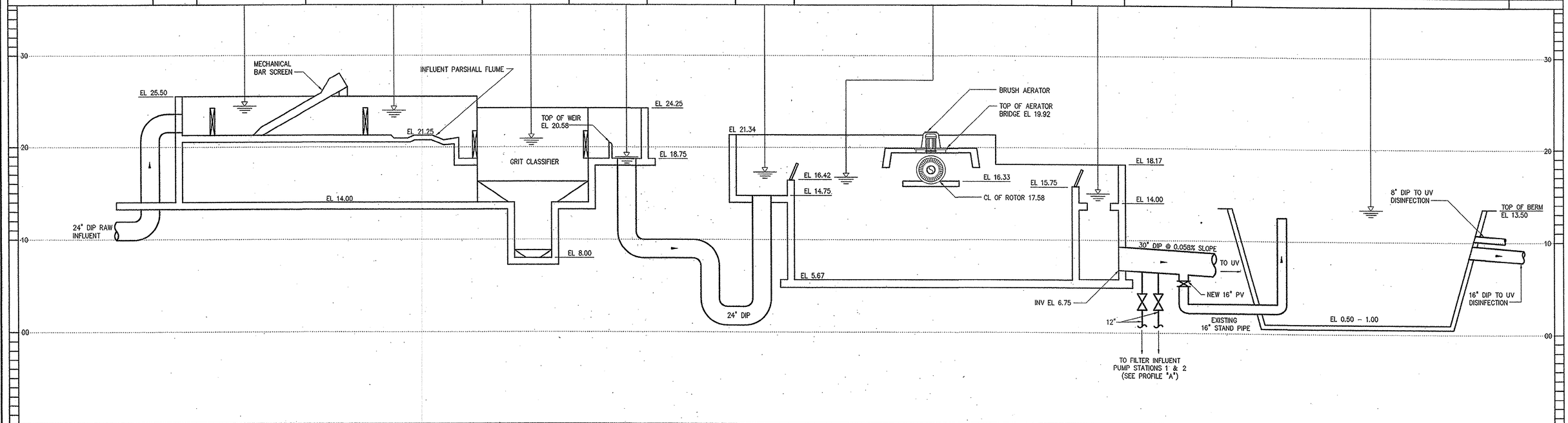

CONDITION	PLANT FLOW	EXISTING CHLORINE CONTACT TANK MODIFIED FOR UV DISINFECTION SYSTEM					EXISTING REAERATION AND DECHLORINATION TANK		NEW EFFLUENT METERING FLUME				EXISTING FILTERS PROFILE "A" BASED ON MAXIMUM DESIGN FLOW THROUGH FILTERS OF 4 MGD		
MAXIMUM DESIGN FLOW	10 MGD	12.93	12.79	11.73	11.73		11.35	11.08	10.85	10.69			WATER LEVEL BACKWASH IS ACTIVATED	19.34	13.77
AVERAGE DESIGN FLOW	4 MGD	10.81	10.78	10.61	10.61		10.55	10.51	10.47	10.11			CLEAN WATER LEVEL	18.31	10.95

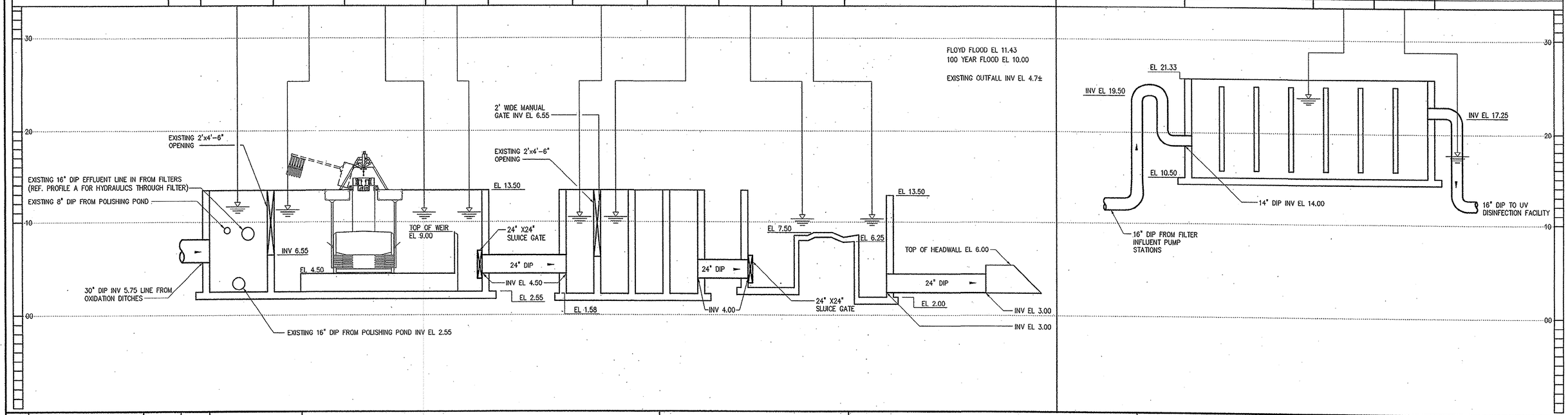

NO.	ISSUED FOR	DATE	BY
2	CONSTRUCTION	11/16/01	SBM
1	REGULATORY APPROVAL	8-31-01	SBM

DESIGNED JWAB
DRAWN ECP
CHECKED JBM
PROJ. ENGR. JBM
APPROVED

SOUTH CAROLINA REGISTERED PROFESSIONAL ENGINEER No. 16512 RONALD L. TAYLOR 11/16/01

SOUTH CAROLINA REGISTERED PROFESSIONAL ENGINEER No. 10488 JOSEPH B. MEEKS JR. 11/16/01

HAZEN AND SAWYER
Environmental Engineers & Scientists
4011 WestChase Blvd, Raleigh, North Carolina 27607

GRAND STRAND WATER AND SEWER AUTHORITY
SOUTH CAROLINA

CONWAY WWTP
4.0 MGD EXPANSION AND UPGRADE

MECHANICAL
HYDRALIC PROFILE

THE SCALE BAR SHOWN BELOW MEASURES ONE INCH LONG ON THE ORIGINAL DRAWING.

DATE AUGUST 2001
H & S JOB NUMBER 30631
CONTRACT NUMBER 1
DRAWING NUMBER M1
H&S FLAT FILE NO. 56

10/30/01 1:51pm FILE= H:\30631\HECH\M001 by ECPLANTER XREFs=00\HYD-PRO, MISC\30631-TB.

35-004-008

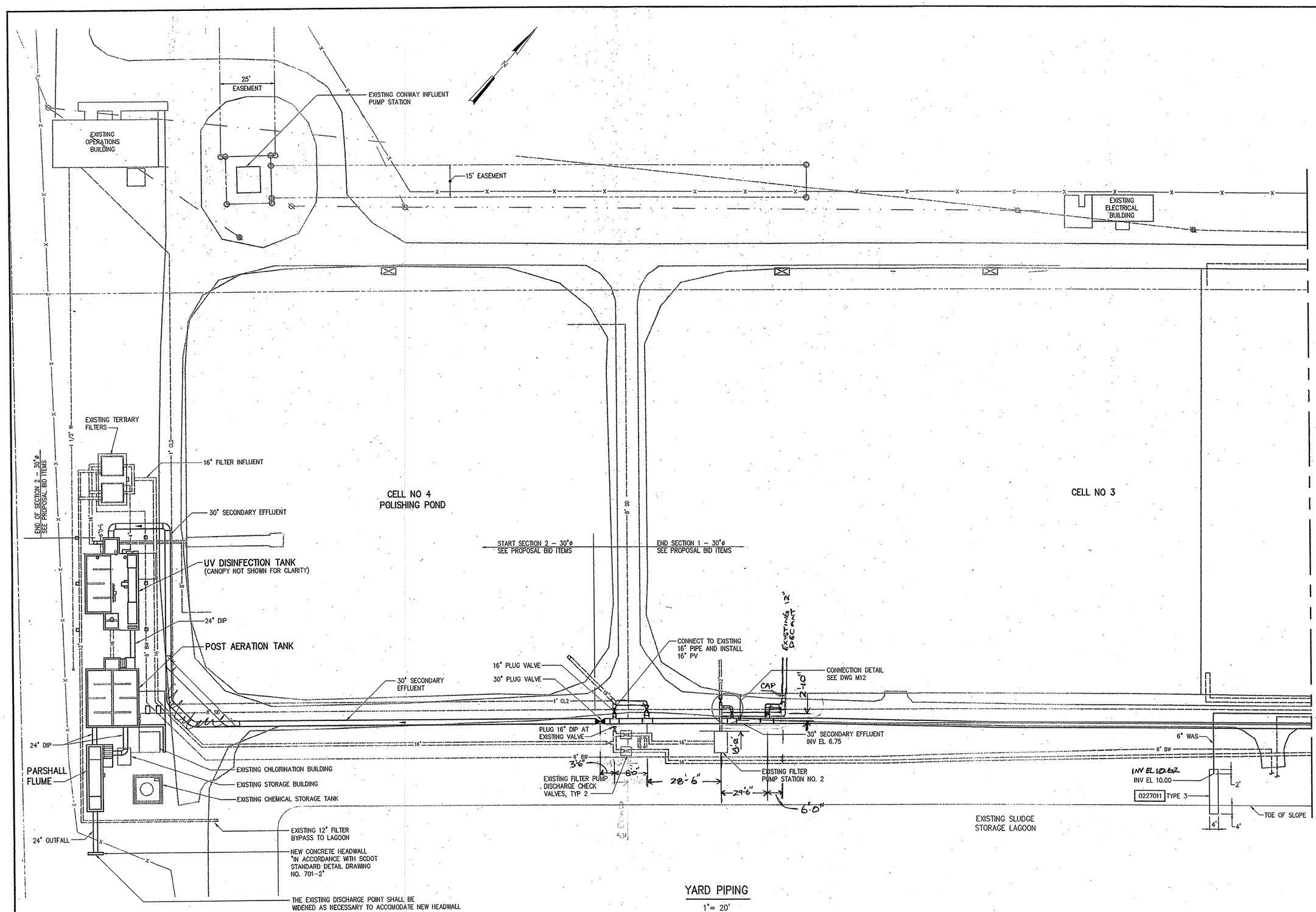

YARD PIPING

1"= 20'

NOTES:

1. CONNECT TO EXISTING PIPING BY REMOVING EXISTING PIPE TO NEAREST JOINT, AND INSTALLING NEW PIPE, FITTINGS AND VALVE AS INDICATED CONNECTIONS SHALL BE RESTRAINED. CONNECT 1509221 MAY BE USED IN THESE LOCATIONS ONLY.
2. EXISTING PIPING SHOWN IN APPROXIMATE LOCATIONS ONLY. ADDITIONAL PIPING NOT SHOWN MAY BE ENCOUNTERED. THE CONTRACTOR SHALL EXCAVATE TEST PITS IN ADVANCE OF ORDERING PIPE MATERIALS IN AREAS WHERE PROPOSED PIPING IS INDICATED TO CROSS OR CONNECT TO EXISTING PIPING. THE CONTRACTOR SHALL LOCATE BOTH HORIZONTALLY AND VERTICALLY ALL PIPING AND REPORT ANY CONFLICTS WITH PROPOSED PIPE LOCATION(S) TO THE ENGINEER AND SUBMIT FOR REVIEW HIS/HER RECOMMENDED ROUTING TO AVOID SUCH FACILITIES. BENDS NECESSARY TO OBTAIN THE ELEVATIONS INDICATED ON THE CONTRACT DRAWINGS OR TO AVOID EXISTING STRUCTURES OR PIPING SHALL BE PROVIDED BY THE CONTRACTOR.
3. ALL BURIED (EXTERIOR) VALVES SHALL INCLUDE A ADJUSTABLE VALVE BOX AND COVER AND SHALL BE OPERATED BY A 2" SQUARE NUT OPERATOR, SEE 0264000. ADDITIONALLY ALL VALVES INSTALLED AT A DEPTH GREATER THAN 5 FEET SHALL HAVE A NUT EXTENSION INSTALLED TO 2 FEET OF FINISH GRADE. PERMANENTLY ATTACH VALVE RISER STEMS FOR ALL VALVES DEEPER THAN 5 FEET IN ACCORDANCE WITH GSWSA SPECIFICATIONS.
4. MINIMUM VERTICAL CLEARANCE BETWEEN TWO CROSSING PIPES SHALL BE 1'-0". IF CLEARANCE MUST BE LESS THAN 1'-0" CONCRETE SHALL BE PLACED AROUND PIPES AS DIRECTED BY THE ENGINEER.
5. PROVIDE 3'-0" MINIMUM COVER ON ALL PIPES UNLESS OTHERWISE INDICATED.
6. THE CONTRACTOR SHALL LOCATE ALL EXISTING ELECTRICAL CONDUCTS AND DUCT BANKS AND COORDINATE THE LOCATIONS OF NEW CONDUITS AND DUCT BANKS WITH THE EXISTING AND WITH EXISTING AND NEW PIPING.

NO.	ISSUED FOR	DATE	BY
2	CONSTRUCTION	11/16/01	JBM
1	REGULATORY APPROVAL	8-31-01	JBM

DESIGNED JBM
DRAWN JTB
CHECKED JBM
PROJ. ENGR. JBM
APPROVED RLT

SOUTH CAROLINA REGISTERED PROFESSIONAL ENGINEER No. 16512 RONALD L. TAYLOR 11/16/01

SOUTH CAROLINA REGISTERED PROFESSIONAL ENGINEER No. 10488 HANSON B. MEEKS, JR. 11/16/01

HAZEN AND SAWYER
Environmental Engineers & Scientists
4011 WestChase Blvd, Raleigh, North Carolina 27607

GRAND STRAND WATER AND SEWER AUTHORITY
SOUTH CAROLINA

CONWAY WWTP
4.0 MGD EXPANSION AND UPGRADE

SITE WORK
MECHANICAL
AREA 1
YARD PIPING

THE SCALE BAR SHOWN BELOW MEASURES ONE INCH LONG ON THE ORIGINAL DRAWING.

DATE AUGUST 2001
H & S JOB NUMBER 30631
CONTRACT NUMBER 1
DRAWING NUMBER M10
H&S FLAT FILE NO. 56

11/01/01 11:08am FILE= H:\30631\MECH\M010 by EWNG XREFs=MISC\30631-TB, 00\SP-ST, 00\PS-TP,

35-004-009

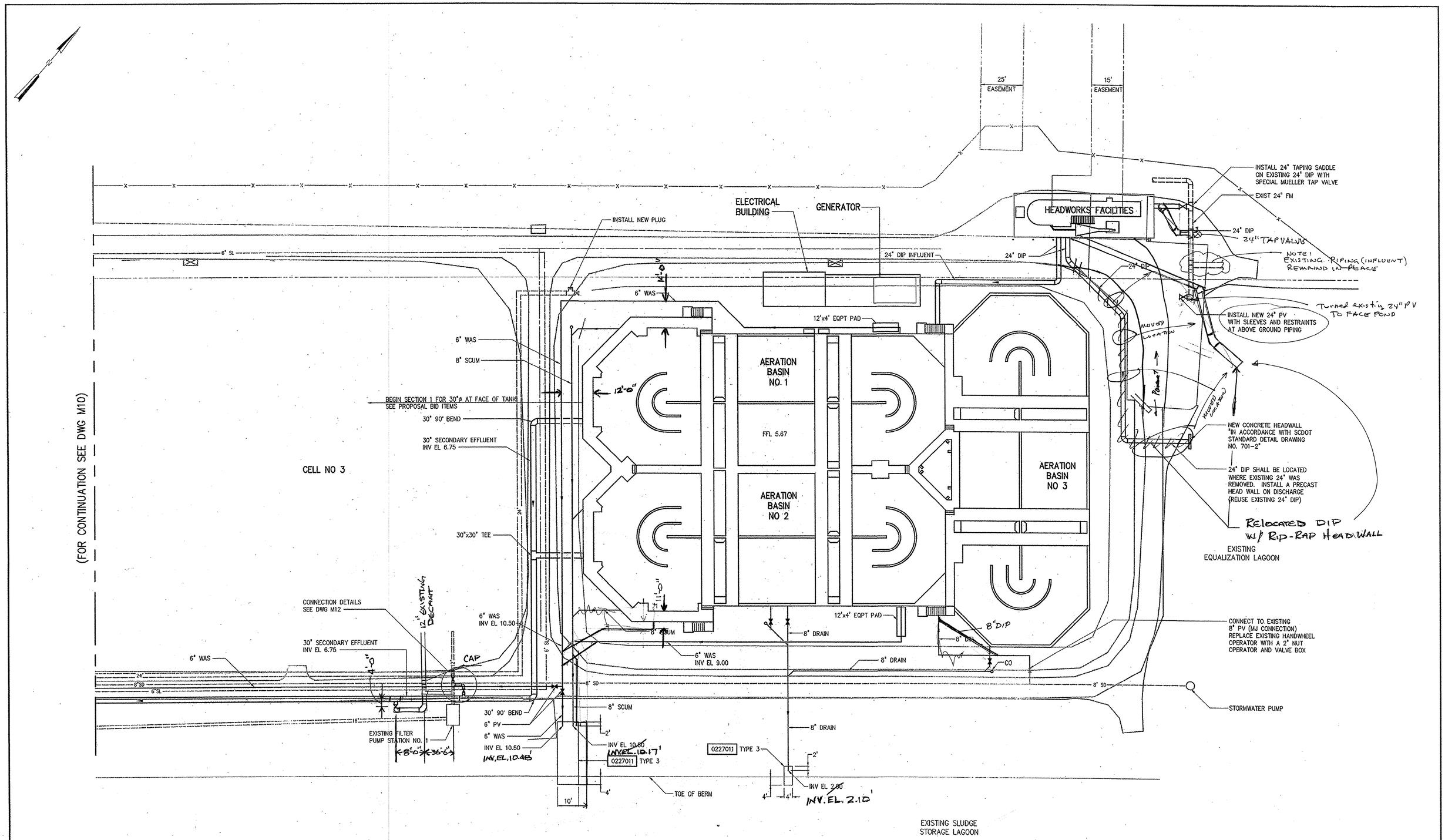

YARD PIPING

1" = 20'

NO.	ISSUED FOR	DATE	BY
2	CONSTRUCTION	11/16/01	JBM
1	REGULATORY APPROVAL	8-31-01	JBM

DESIGNED JBM
DRAWN JTB
CHECKED JBM
PROJ. ENGR. JBM
APPROVED

SOUTH CAROLINA REGISTERED PROFESSIONAL ENGINEER No.16512 RONALD L. TAYLOR 11/16/01

SOUTH CAROLINA REGISTERED PROFESSIONAL ENGINEER No.10488 JOSEPH B. MEEKS 11/16/01

HAZEN AND SAWYER
Environmental Engineers & Scientists
4011 WestChase Blvd, Raleigh, North Carolina 27607

GRAND STRAND WATER AND SEWER AUTHORITY
SOUTH CAROLINA

CONWAY WWTP
4.0 MGD EXPANSION AND UPGRADE

SITE WORK
MECHANICAL
AREA 2
YARD PIPING

THE SCALE BAR SHOWN BELOW MEASURES ONE INCH LONG ON THE ORIGINAL DRAWING.

DATE AUGUST 2001
H & S JOB NUMBER 30631
CONTRACT NUMBER 1
DRAWING NUMBER M11
H&S FLAT FILE NO. 56

11/01/01 11:08am FILE= H:\30631\MECH\M011 by EWING XREFs=MISC\30631-TB, 00\SP-ST, 00\PS-TP,

35-004-010

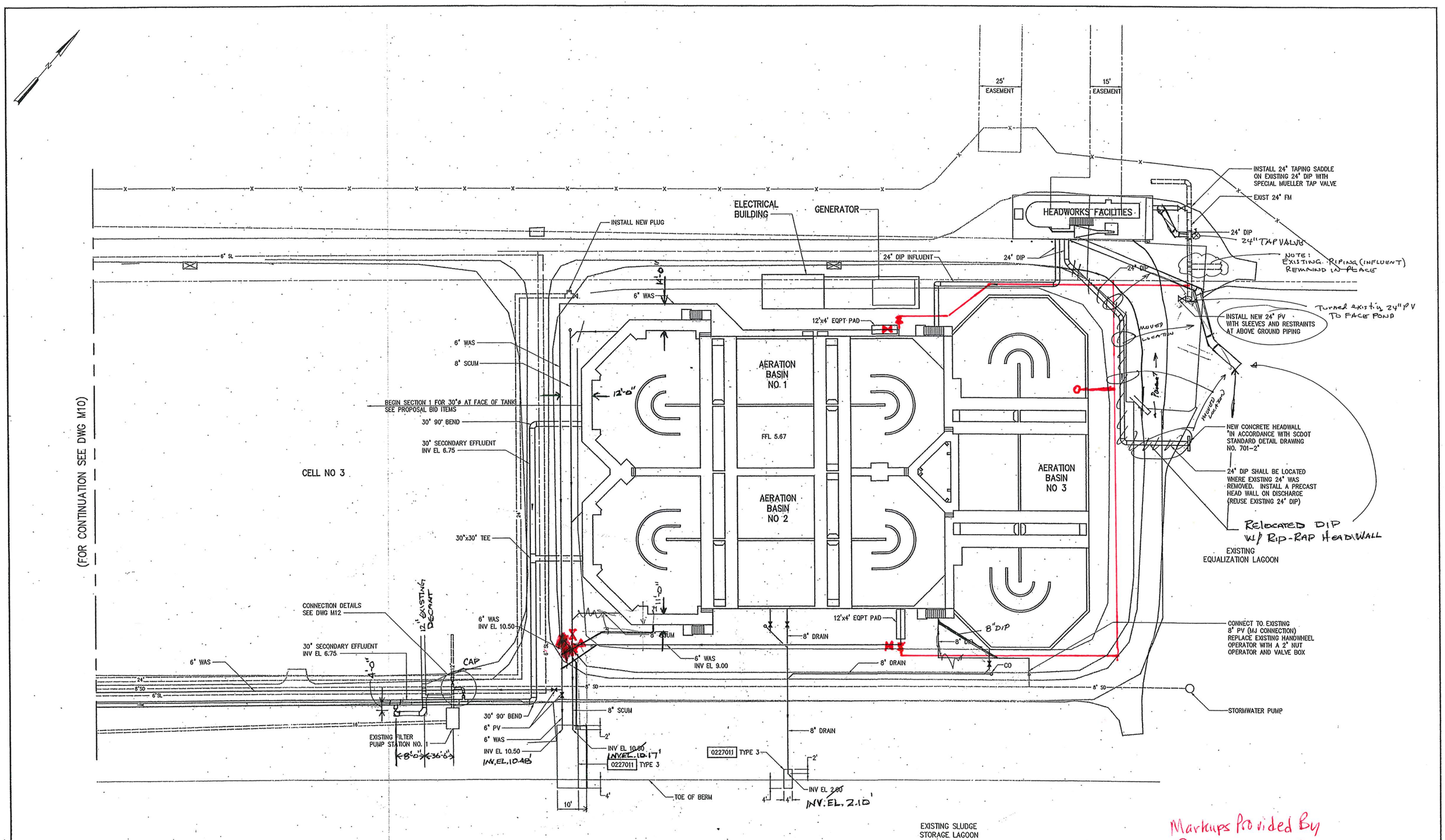

YARD PIPING

1"= 20'

Markups Provided By Robbie Stewart May, 2019

35-004-010

DESIGNED JBM DRAWN JTB		GRAND STRAND WATER AND SEWER AUTHORITY	SITE WORK	THE SCALE BAR SHOWN BELOW	DATE AUGUST 2001 H & S JOB 30631

NOTES:

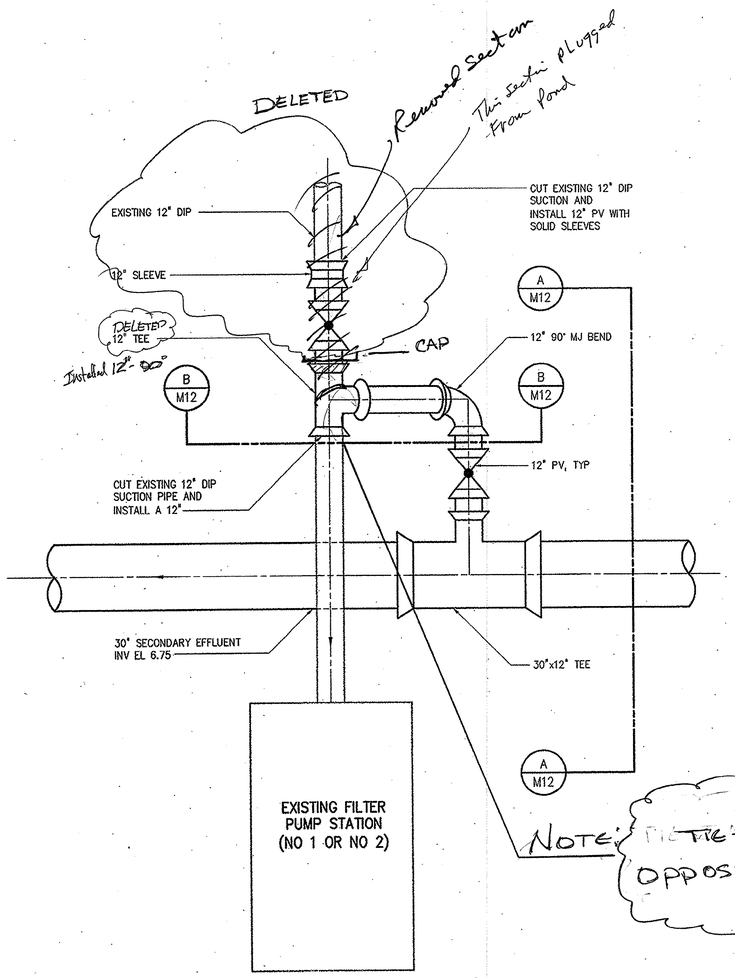

PLAN
3/8"=1'-0"

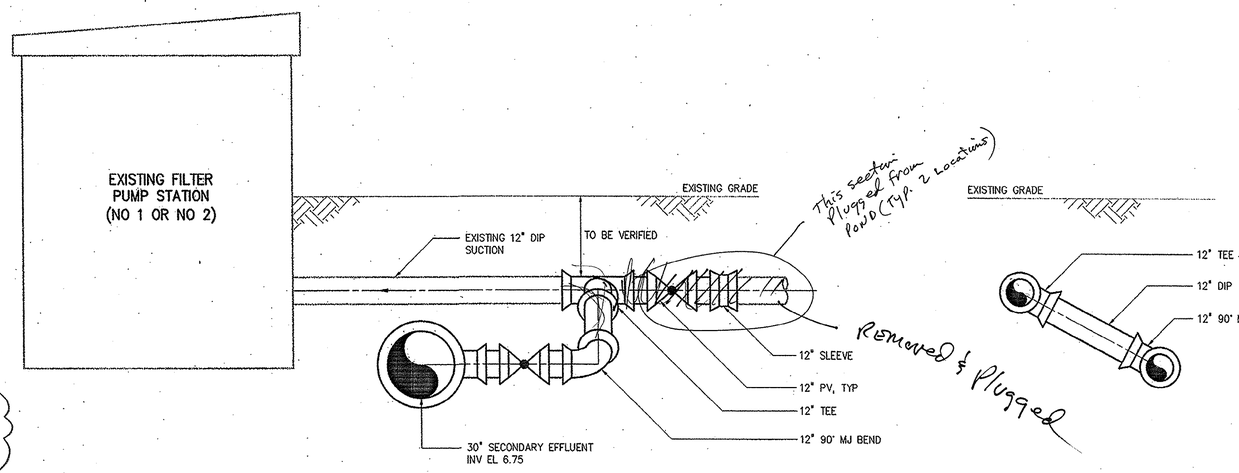

SECTION A/M12
3/8"=1'-0"

SECTION B/M12
3/8"=1'-0"

NO.	ISSUED FOR	DATE	BY
2	CONSTRUCTION	11/16/01	JBM
1	REGULATORY APPROVAL	8-31-01	JBM

DESIGNED JBM
DRAWN EWN
CHECKED JBM
PROJ. ENGR. JBM
APPROVED RLT

SOUTH CAROLINA REGISTERED PROFESSIONAL ENGINEER RONALD L. TAYLOR 11/16/01

SOUTH CAROLINA REGISTERED PROFESSIONAL ENGINEER No.10488 JOSEPH B. MEEKS 11/16/01

HAZEN AND SAWYER
Environmental Engineers & Scientists
4011 WestChase Blvd, Raleigh, North Carolina 27607

GRAND STRAND WATER AND SEWER AUTHORITY
SOUTH CAROLINA

CONWAY WWTP
4.0 MGD EXPANSION AND UPGRADE

EXISTING FILTER PUMP STATION
MECHANICAL
CONNECTION DETAILS

THE SCALE BAR SHOWN BELOW MEASURES ONE INCH LONG ON THE ORIGINAL DRAWING.

DATE AUGUST 2001
H & S JOB NUMBER 30631
CONTRACT NUMBER 1
DRAWING NUMBER M12
H&S FLAT FILE NO. 56

10/30/01 2:22pm FILE= H:\30631\MECH\M012 by EWNG XREFs=MISC\30631-TB, 00\PS-TP, 00\PS-S001, 00\PS-S002.

35-004-011

NOTES:

1. THE HEADWORK FACILITY WILL BE FURNISHED BY THE OWNER AND INSTALLED BY THE CONTRACTOR UNDER THIS CONTRACT AS INDICATED BY THE SPECIFICATION.
2. DIMENSION TO BE DETERMINED BY EQUIPMENT MANUFACTURER.

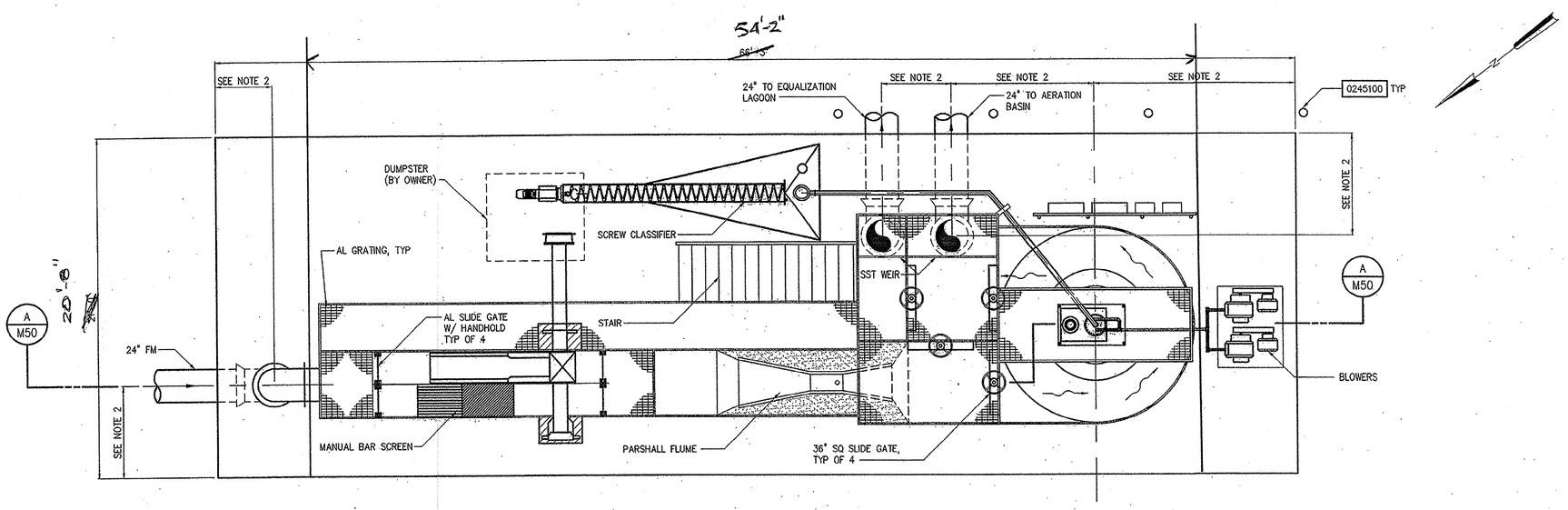

TOP PLAN
1/4"=1'-0"

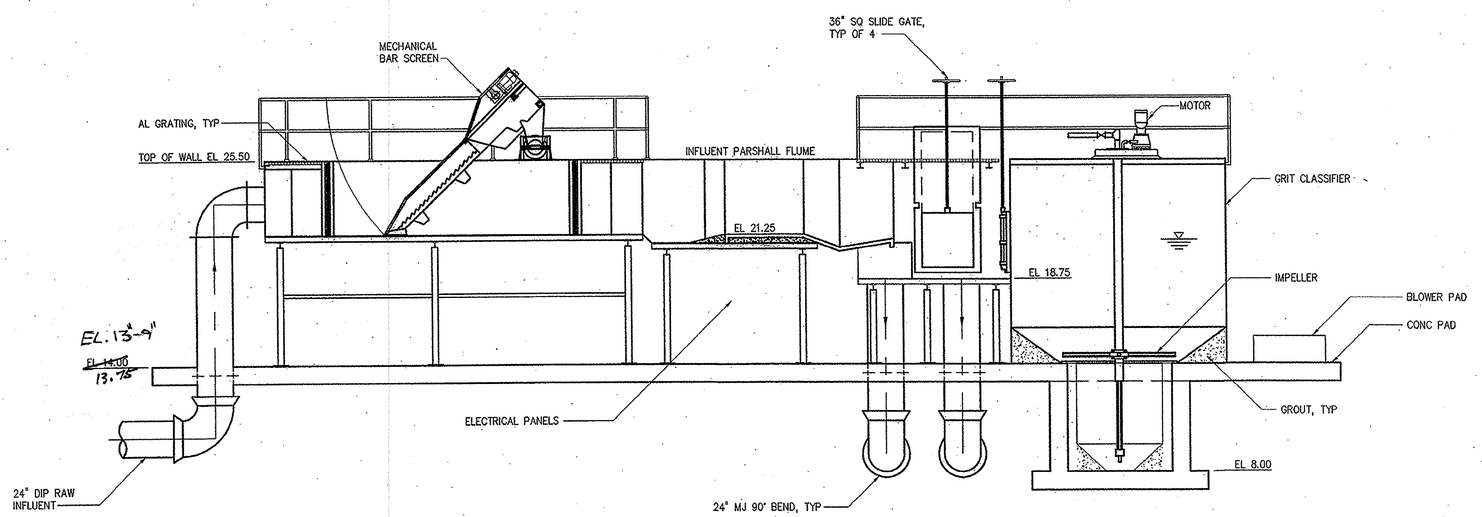

SECTION A/S50
1/4"=1'-0"

NO.	ISSUED FOR	DATE	BY
2	CONSTRUCTION	11/16/01	JBM
1	REGULATORY APPROVAL	8-31-01	JBM

DESIGNED JBM
DRAWN EWN
CHECKED JBM
PROJ. ENGR. JBM
APPROVED

SOUTH CAROLINA REGISTERED PROFESSIONAL ENGINEER RONALD L. TAYLOR 11/16/01

SOUTH CAROLINA REGISTERED PROFESSIONAL ENGINEER No.10488 RALPH B. MEEKS JR. 11/16/01

HAZEN AND SAWYER
Environmental Engineers & Scientists
4011 WestChase Blvd, Raleigh, North Carolina 27607

GRAND STRAND WATER AND SEWER AUTHORITY
SOUTH CAROLINA

CONWAY WWTP
4.0 MGD EXPANSION AND UPGRADE

HEADWORKS FACILITIES
MECHANICAL
PLAN AND SECTION

THE SCALE BAR SHOWN BELOW MEASURES ONE INCH LONG ON THE ORIGINAL DRAWING.

DATE AUGUST 2001
H & S JOB NUMBER 30631
CONTRACT NUMBER 1A
DRAWING NUMBER M50
H&S FLAT FILE NO. 56.

11/07/01 9:59am FILE= H:\30631\MECH\M050 by EWNG XREF:=050\HW-TP, MISC\30631-TB, 050\HW-S01-M,

35-004-012

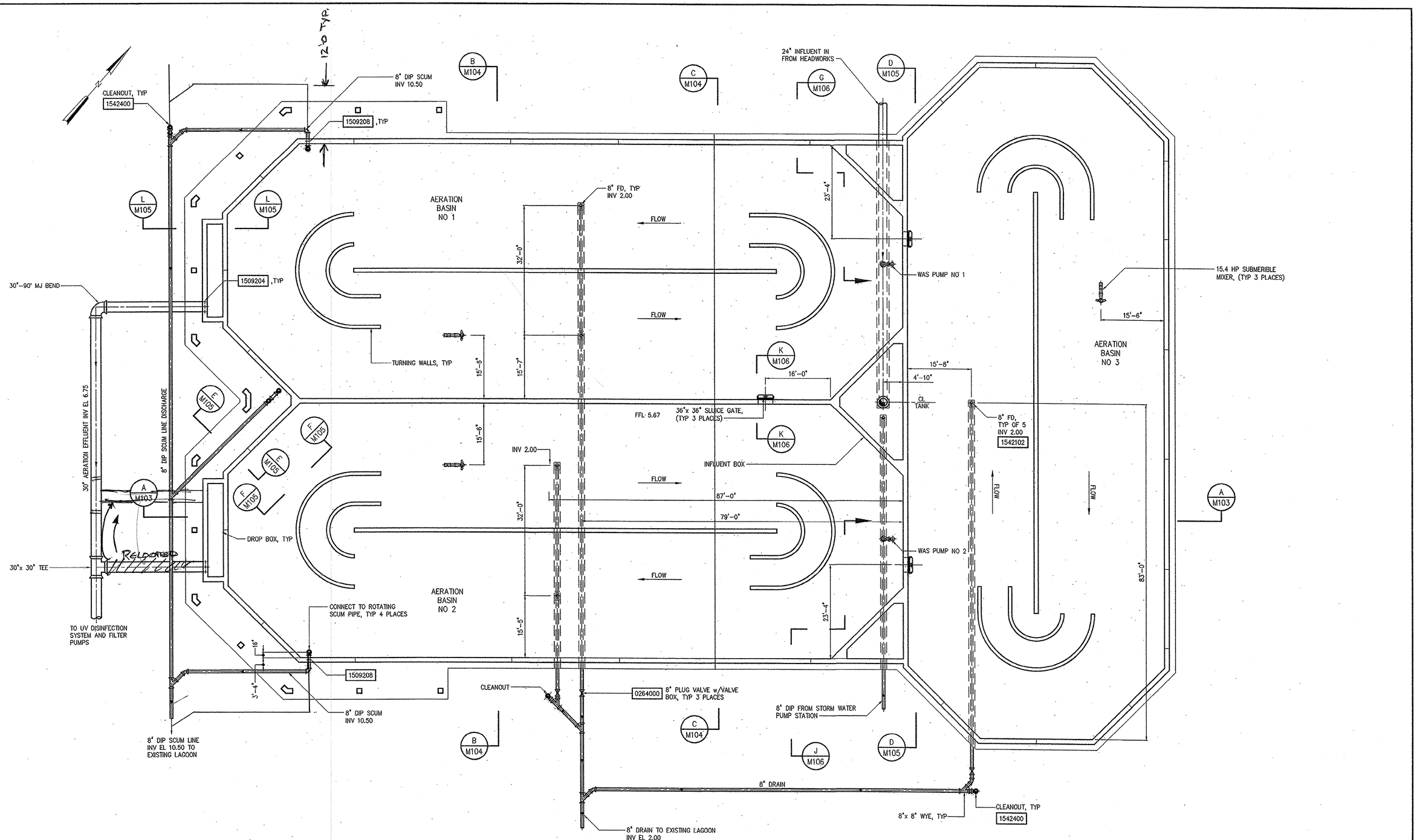

BOTTOM PLAN

3/32"=1'-0"

NO.	ISSUED FOR	DATE	BY
2	CONSTRUCTION	11/16/01	JBM
1	REGULATORY APPROVAL	8-31-01	JBM

DESIGNED JWAB
DRAWN ECP/JTB
CHECKED JBM
PROJ. ENGR. JBM
APPROVED

SOUTH CAROLINA PROFESSIONAL ENGINEER No. 16812 REGISTERED RONALD L. TAYLOR 11/16/01

SOUTH CAROLINA REGISTERED PROFESSIONAL ENGINEER No.10488 JOSHUA B. MEEKS 11/16/01

HAZEN AND SAWYER
Environmental Engineers & Scientists
4011 WestChase Blvd, Raleigh, North Carolina 27607

GRAND STRAND WATER AND SEWER AUTHORITY
SOUTH CAROLINA

CONWAY WWTP
4.0 MGD EXPANSION AND UPGRADE

4 MGD TRIPLE DITCH AERATION BASIN
MECHANICAL
BOTTOM PLAN

THE SCALE BAR SHOWN BELOW MEASURES ONE INCH LONG ON THE ORIGINAL DRAWING.

DATE AUGUST 2001
H & S JOB NUMBER 30631
CONTRACT NUMBER 1
DRAWING NUMBER M100
H&S FLAT FILE NO. 56.

11/05/01 7:18am FILE= H:\30631\MECH\M100 by ECPLANTER XREFs=100\DT-PB, MISC\30631-TB,

35-004-013

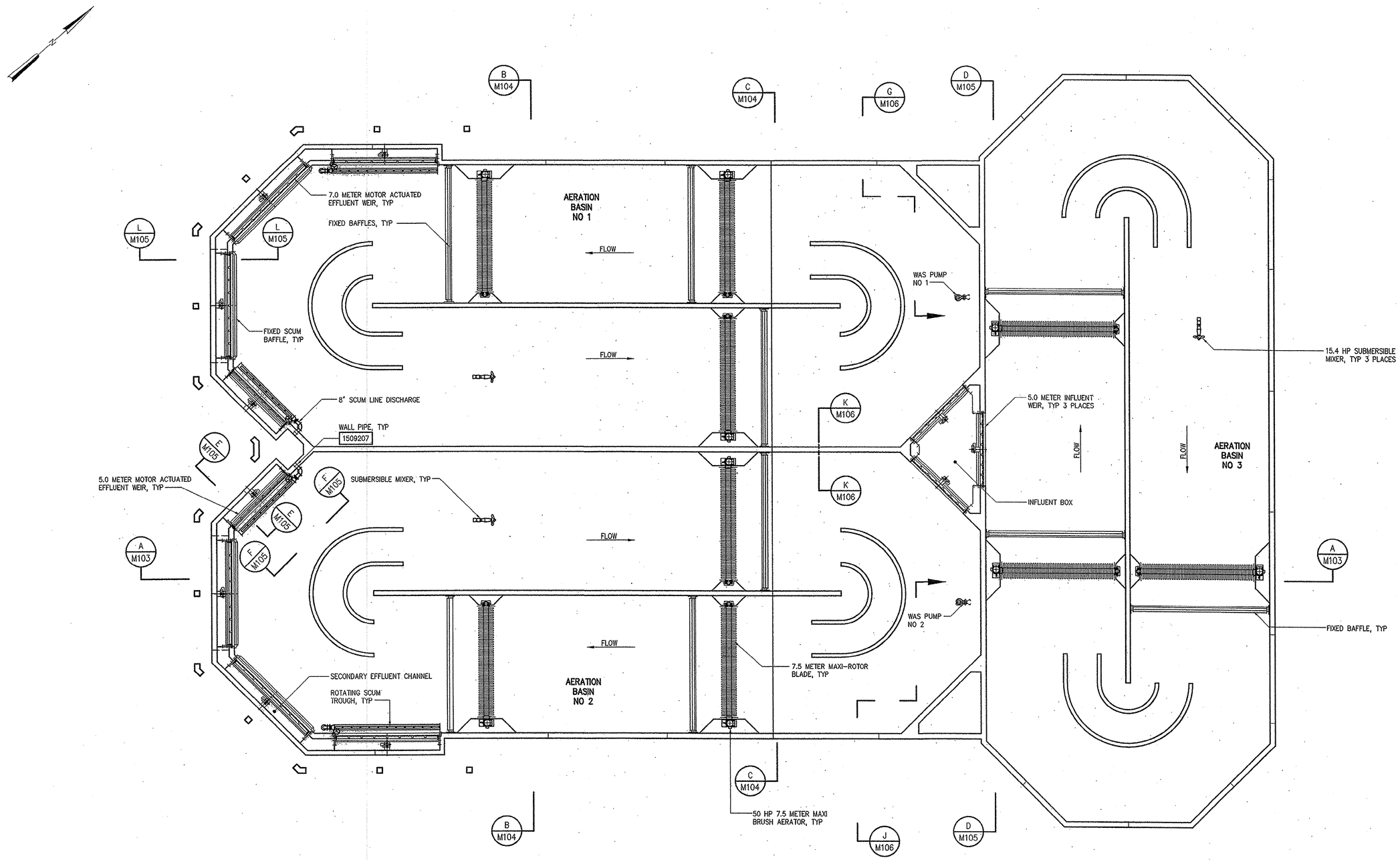

INTERMEDIATE PLAN

3/32"=1'-0"

NO.	ISSUED FOR	DATE	BY
2	CONSTRUCTION	11/16/01	JBM
1	REGULATORY APPROVAL	8-31-01	JBM

DESIGNED JWAB
DRAWN ECP/JTB
CHECKED JBM
PROJ. ENGR. JBM
APPROVED RLT

SOUTH CAROLINA PROFESSIONAL ENGINEER No.16612 RONALD L. TAYLOR 11/16/01

SOUTH CAROLINA PROFESSIONAL ENGINEER No.10488 JOSEPH B. MEEKS 11/16/01

HAZEN AND SAWYER
Environmental Engineers & Scientists
4011 WestChase Blvd, Raleigh, North Carolina 27607

GRAND STRAND WATER AND SEWER AUTHORITY
SOUTH CAROLINA

CONWAY WWTP
4.0 MGD EXPANSION AND UPGRADE

4 MGD TRIPLE DITCH AERATION BASIN
MECHANICAL
INTERMEDIATE PLAN

THE SCALE BAR SHOWN BELOW MEASURES ONE INCH LONG ON THE ORIGINAL DRAWING.

DATE AUGUST 2001
H & S JOB NUMBER 30631
CONTRACT NUMBER 1
DRAWING NUMBER M101
H&S FLAT FILE NO. 56

11/15/01 11:53am FILE= H:\30631\MECH\M101 by ECPLANTER XREFs=MISC\30631-TB, 100\0T-PI,

35-004-014

NOTES:

1 CONTRACTOR SHALL CONTACT MANUFACTURER FOR MECHANICAL EQUIPMENT LAYOUTS SHOWN. BASED ON 4 MGD TRIPLE DITCH AERATION BASIN, MANUFACTURED BY KRUGER PRODUCTS, AND SHALL COMPLY WITH SPECIFICATION 11460.

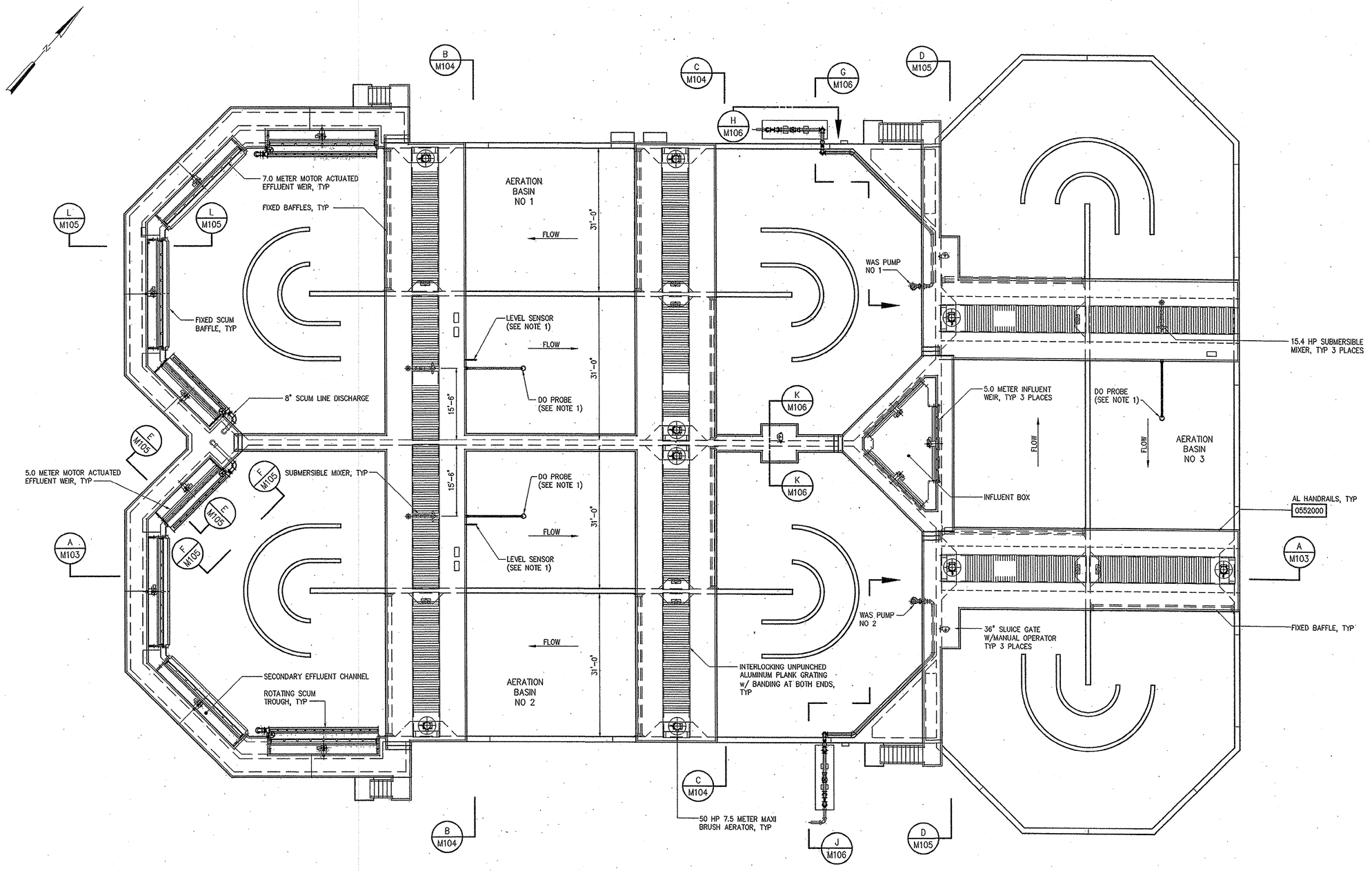

TOP PLAN

3/32"=1'-0"

NO.	ISSUED FOR	DATE	BY
2	CONSTRUCTION	11/16/01	SBM
1	REGULATORY APPROVAL	8-31-01	SBM

DESIGNED JWAB
DRAWN ECP/JTB
CHECKED SBM
PROJ. ENGR. JBM
APPROVED RLT

SOUTH CAROLINA REGISTERED PROFESSIONAL ENGINEER No. 15612 RONALD L. TAYLOR 11/16/01

SOUTH CAROLINA REGISTERED PROFESSIONAL ENGINEER No. 10488 JOSEPH B. MEEKS 11/16/01

HAZEN AND SAWYER
Environmental Engineers & Scientists
4011 WestChase Blvd, Raleigh, North Carolina 27607

GRAND STRAND WATER AND SEWER AUTHORITY
SOUTH CAROLINA

CONWAY WWTP
4.0 MGD EXPANSION AND UPGRADE

4 MGD TRIPLE DITCH AERATION BASIN
MECHANICAL
TOP PLAN

THE SCALE BAR SHOWN BELOW MEASURES ONE INCH LONG ON THE ORIGINAL DRAWING.

DATE AUGUST 2001
H & S JOB NUMBER 30631
CONTRACT NUMBER 1
DRAWING NUMBER M102
H&S FLAT FILE NO. 56

11/15/01 10:56am FILE= H:\30631\MECH\M102 by ECPLANTER XREFs=MISC\30631-TB, 100\DT-PT,

35-004-015

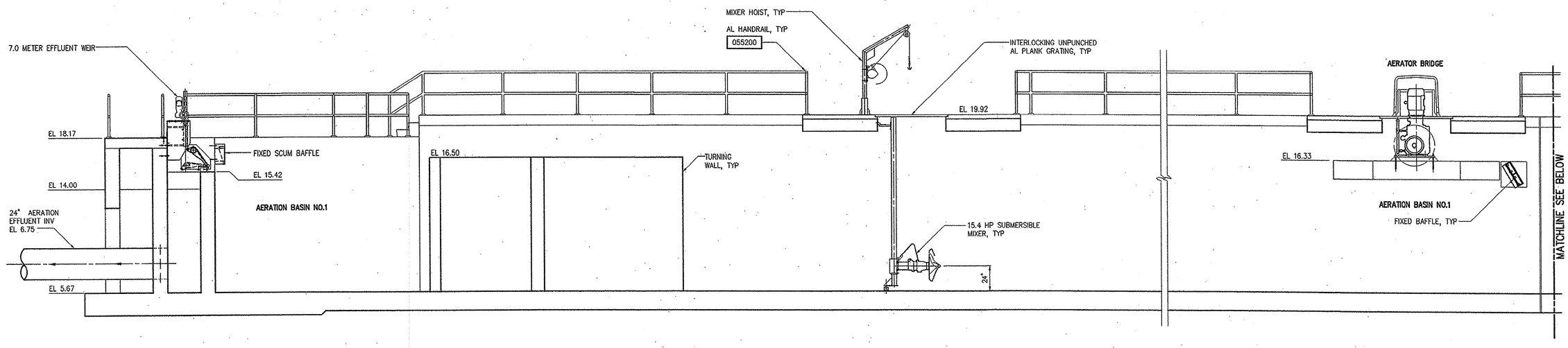

SECTION A / M100
1/4"=1'-0"

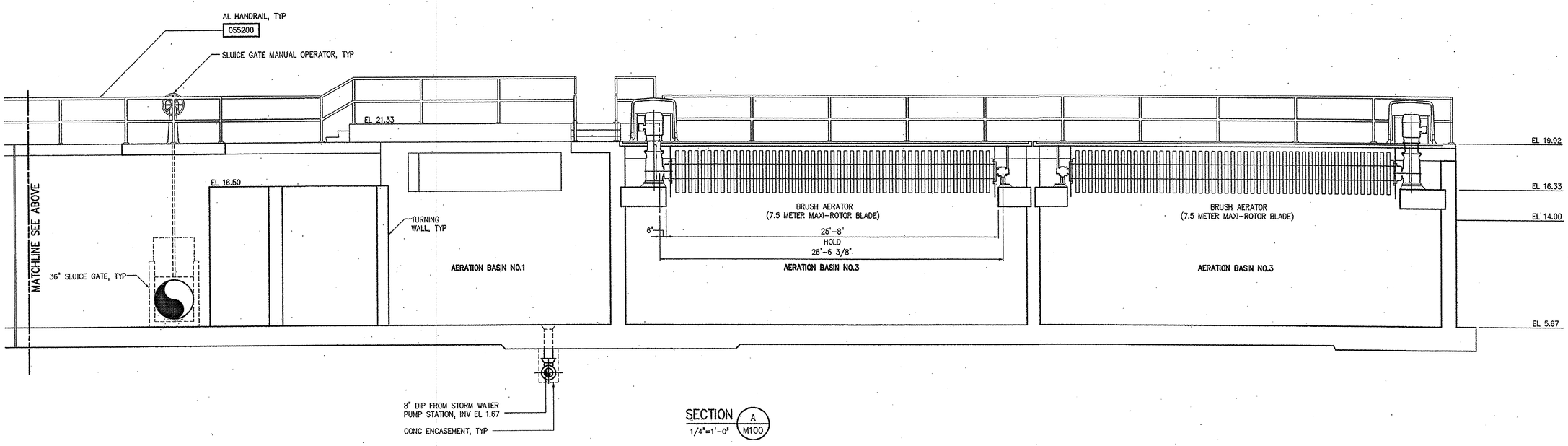

SECTION A / M100
1/4"=1'-0"

NO.	ISSUED FOR	DATE	BY
2	CONSTRUCTION	11/16/01	JBM
1	REGULATORY APPROVAL	8-31-01	JBM

DESIGNED JWAB
DRAWN ECP
CHECKED JBM
PROJ. ENGR. JBM
APPROVED RLT

SOUTH CAROLINA REGISTERED PROFESSIONAL ENGINEER No. 16512 ROWALD L. TAYLOR 11/16/01

SOUTH CAROLINA REGISTERED PROFESSIONAL ENGINEER No. 10488 JOSEPH B. MEEKS 11/16/01

HAZEN AND SAWYER
Environmental Engineers & Scientists
4011 WestChase Blvd, Raleigh, North Carolina 27607

GRAND STRAND WATER AND SEWER AUTHORITY
SOUTH CAROLINA

CONWAY WWTP
4.0 MGD EXPANSION AND UPGRADE

4 MGD TRIPLE DITCH AERATION BASIN
MECHANICAL
SECTIONS

THE SCALE BAR SHOWN BELOW MEASURES ONE INCH LONG ON THE ORIGINAL DRAWING.

DATE AUGUST 2001
H & S JOB NUMBER 30631
CONTRACT NUMBER 1
DRAWING NUMBER M103
H&S FLAT FILE NO. 56

11/16/01 8:56am FILE= H:\30631\MECH\M103 by ECPLANTER XREFs=MISC\30631-TB, 100\DT-M-501.

35-004-016

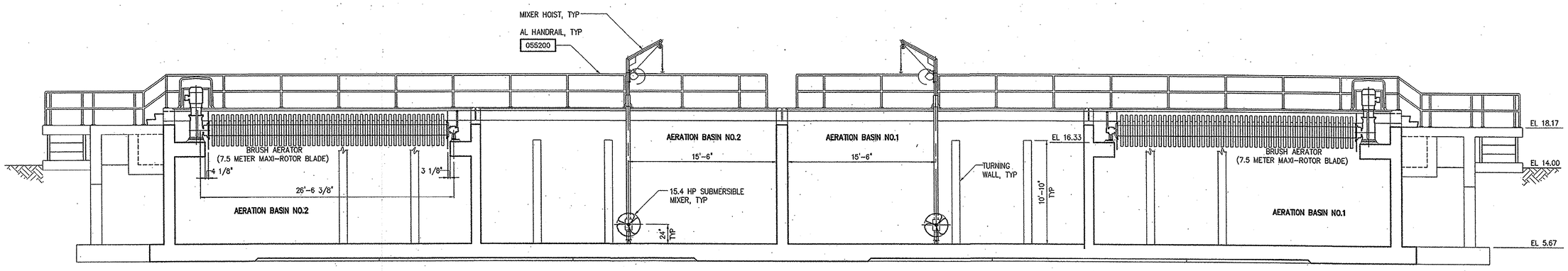

SECTION B / M100
3/16"=1'-0"

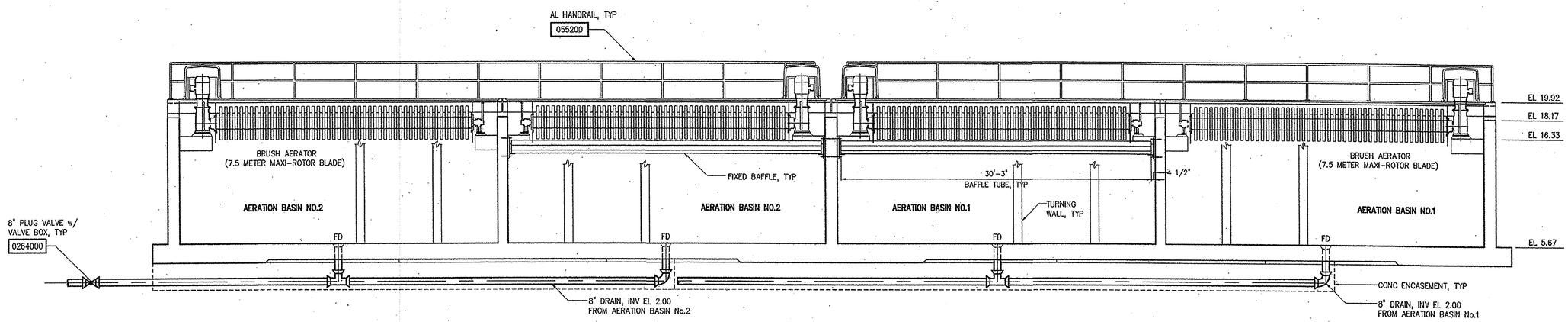

SECTION C / M100
3/16"=1'-0"

NO.	ISSUED FOR	DATE	BY
2	CONSTRUCTION	11/16/01	JBM
1	REGULATORY APPROVAL	8-31-01	JBM

DESIGNED JWAB
DRAWN ECP
CHECKED RLT
PROJ. ENGR. JBM
APPROVED RLT

SOUTH CAROLINA REGISTERED PROFESSIONAL ENGINEER RONALD L. TAYLOR 11/16/01

SOUTH CAROLINA REGISTERED PROFESSIONAL ENGINEER No.10488 JOSEPH B. MEEKS, JR. 11/16/01

HAZEN AND SAWYER
Environmental Engineers & Scientists
4011 WestChase Blvd, Raleigh, North Carolina 27607

GRAND STRAND WATER AND SEWER AUTHORITY
SOUTH CAROLINA

CONWAY WWTP
4.0 MGD EXPANSION AND UPGRADE

4 MGD TRIPLE DITCH AERATION BASIN
MECHANICAL
SECTIONS

THE SCALE BAR SHOWN BELOW MEASURES ONE INCH LONG ON THE ORIGINAL DRAWING.

DATE AUGUST 2001
H & S JOB NUMBER 30631
CONTRACT NUMBER 1
DRAWING NUMBER M104
H&S FLAT FILE NO. 56

11/13/01 10:10am FILE= H:\30631\MECH\M103 by ECPLANTER XREFs=MISC\30631-TB, 100\DT-M-S07, 100\DT-PB, 100\DT-PI, 100\DT-PT, 100\DT-M-S08,

35-004-017

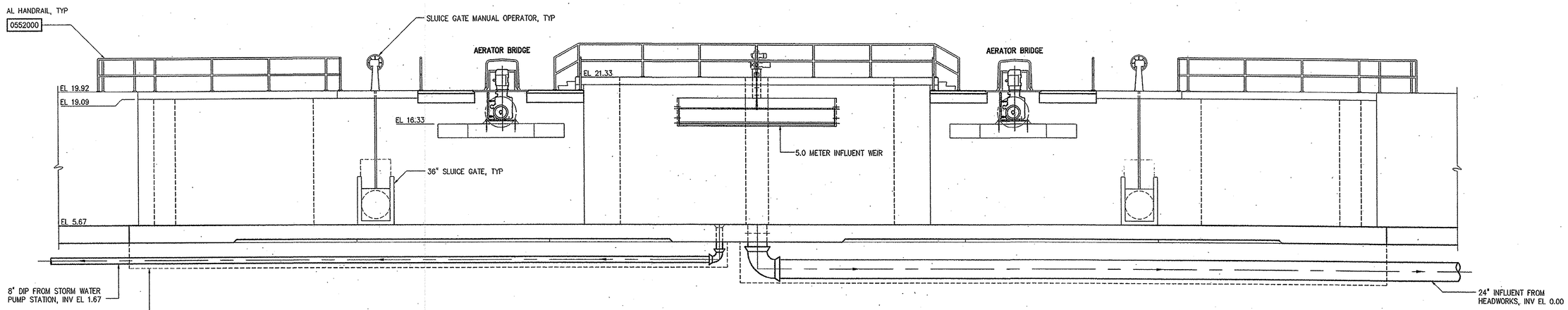

SECTION D / M100
3/16"=1'-0"

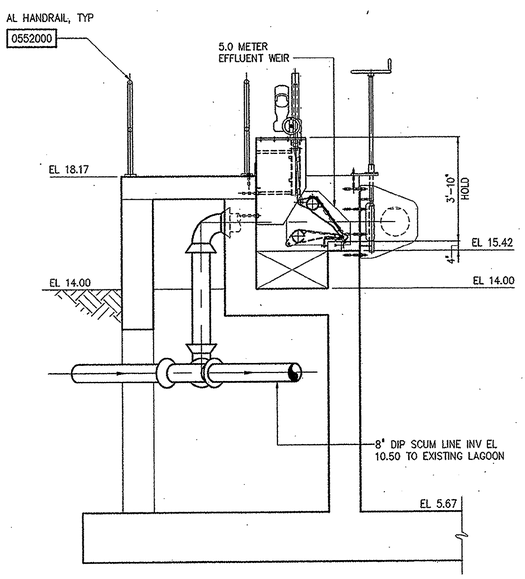

SECTION E / M100
3/8"=1'-0"

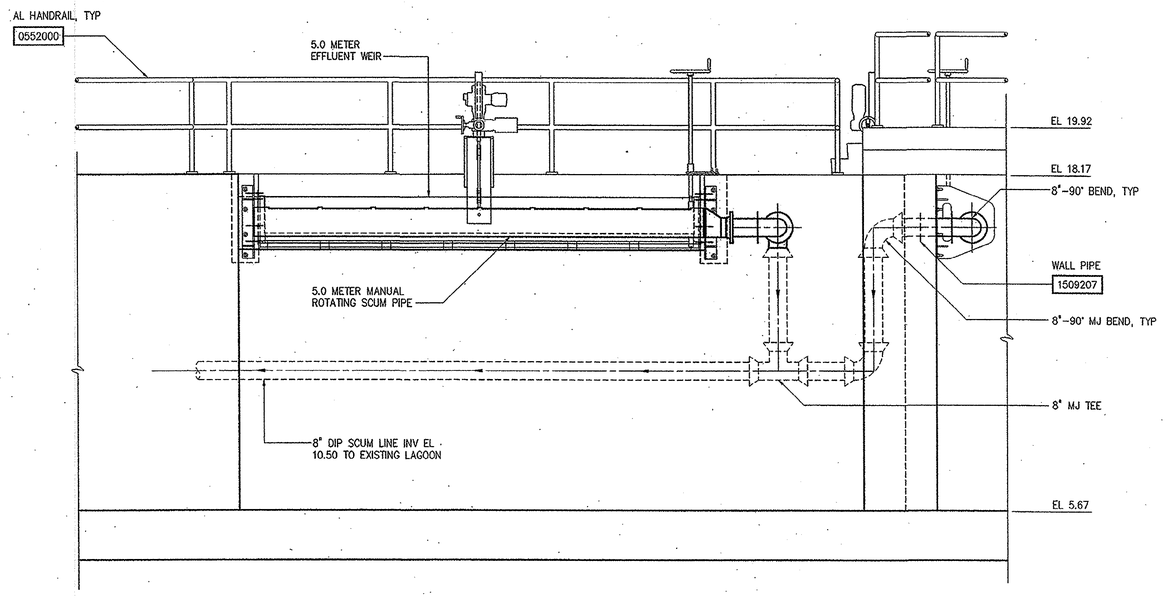

SECTION F / M100
3/8"=1'-0"

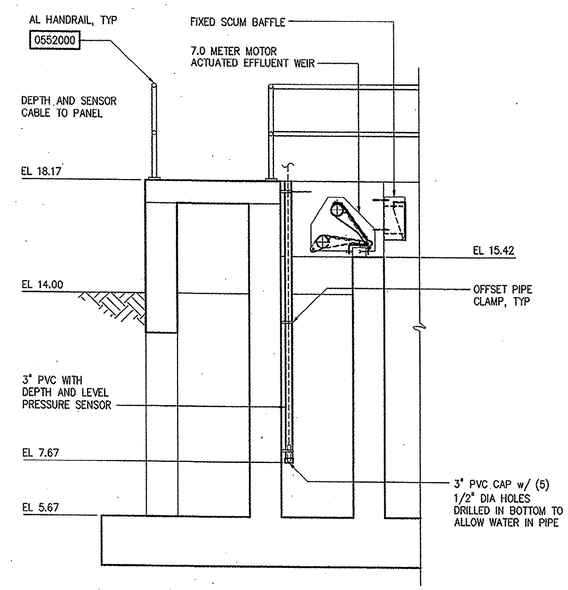

SECTION L / M100
3/8"=1'-0"

NO.	ISSUED FOR	DATE	BY
2	CONSTRUCTION	11/16/01	JBM
1	REGULATORY APPROVAL	8-31-01	JBM

DESIGNED JWAB
DRAWN ECP
CHECKED JBM
PROJ. ENGR. JBM
APPROVED

SOUTH CAROLINA PROFESSIONAL ENGINEER No. 26612 RONALD L. TAYLOR 11/16/01

SOUTH CAROLINA REGISTERED PROFESSIONAL ENGINEER No.10488 JOHNSON B. MEEKS 11/16/01

HAZEN AND SAWYER
Environmental Engineers & Scientists
4011 WestChase Blvd, Raleigh, North Carolina 27607

GRAND STRAND WATER AND SEWER AUTHORITY
SOUTH CAROLINA

CONWAY WWTP
4.0 MGD EXPANSION AND UPGRADE

4 MGD TRIPLE DITCH AERATION BASIN
MECHANICAL
SECTIONS

THE SCALE BAR SHOWN BELOW MEASURES ONE INCH LONG ON THE ORIGINAL DRAWING.

DATE AUGUST 2001
H & S JOB NUMBER 30631
CONTRACT NUMBER 1
DRAWING NUMBER M105
H&S FLAT FILE NO. 56

11/16/01 11:30am FILE= H:\30631\MECH\M105 by ECPLANTER XREFs=MISC\30631-TB, 100\DT-M-S09, 100\DT-M-S06, 100\DT-M-S05, 100\DT-M-S10,

35-004-018

NOTES:

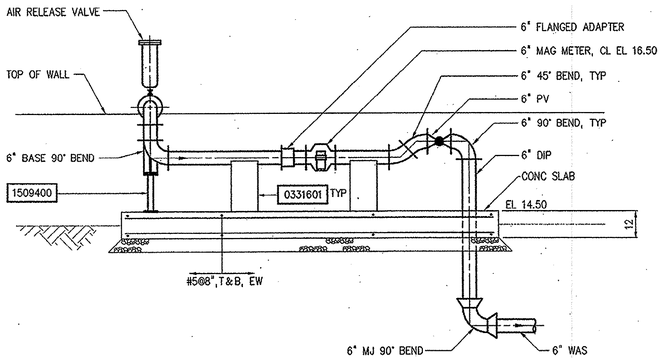

SECTION H / M102
3/8"=1'-0"

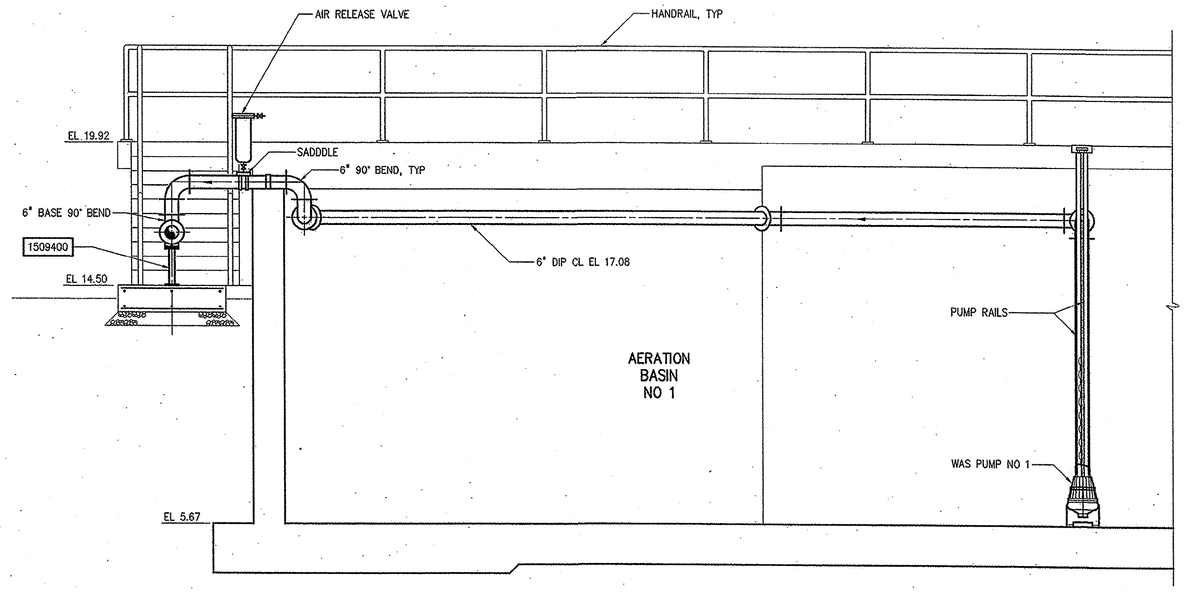

SECTION G / M100
3/8"=1'-0"

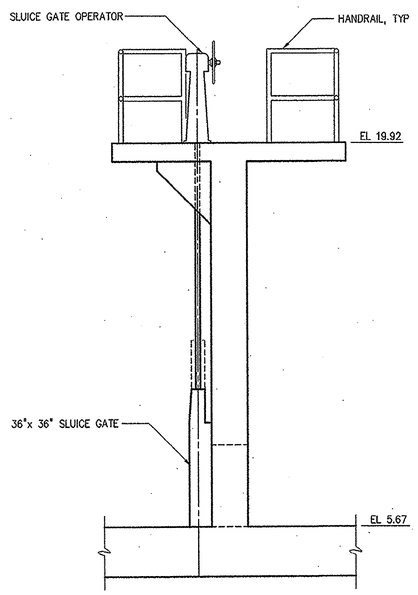

SECTION K / M100
3/8"=1'-0"

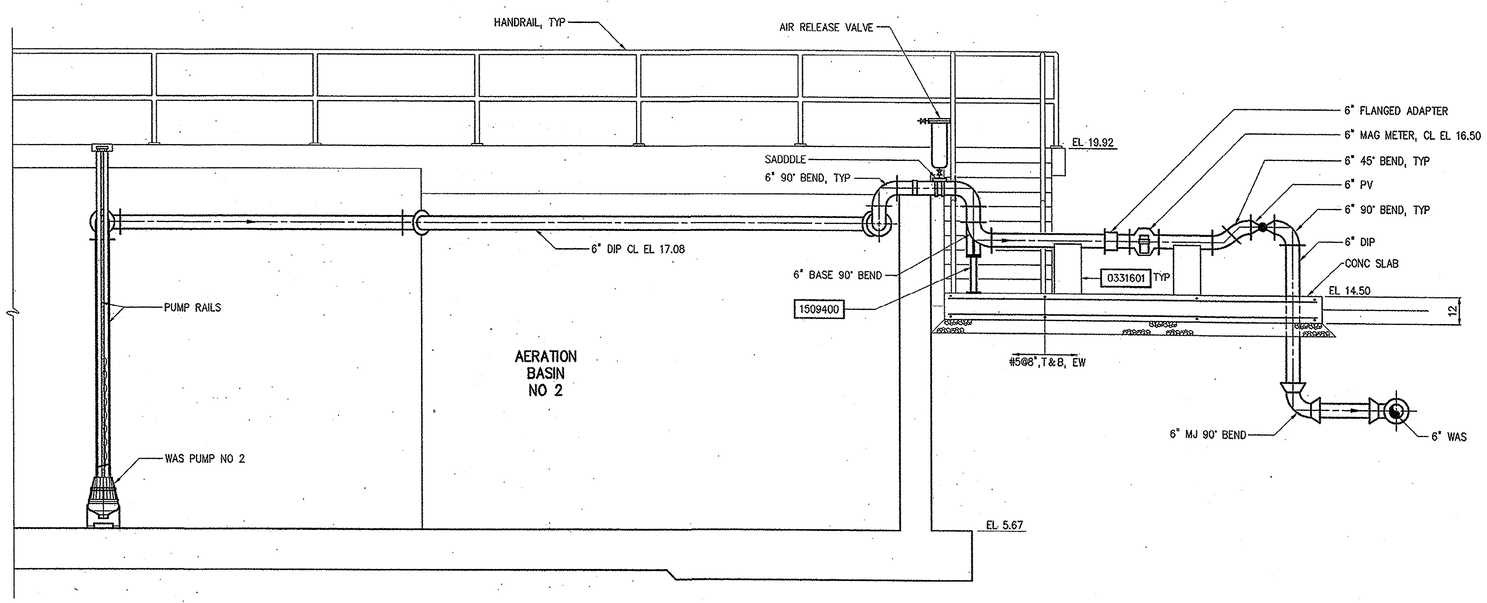

SECTION J / M100
3/8"=1'-0"

NO.	ISSUED FOR	DATE	BY
2	CONSTRUCTION	11/16/01	JBM
1	REGULATORY APPROVAL	8-31-01	JBM

APPROVED

DESIGNED JWAB
DRAWN ECP/JTB
CHECKED JBM
PROJ. ENGR. JBM

SOUTH CAROLINA REGISTERED PROFESSIONAL ENGINEER No.18512 RONALD L. TAYLOR 11/16/01

SOUTH CAROLINA REGISTERED PROFESSIONAL ENGINEER No.10488 LAWSHON B. MECKS 11/16/01

HAZEN AND SAWYER
Environmental Engineers & Scientists
4011 WestChase Blvd, Raleigh, North Carolina 27607

GRAND STRAND WATER AND SEWER AUTHORITY
SOUTH CAROLINA

CONWAY WWTP
4.0 MGD EXPANSION AND UPGRADE

4 MGD TRIPLE DITCH AERATION BASIN
MECHANICAL
SECTIONS

THE SCALE BAR SHOWN BELOW MEASURES ONE INCH LONG ON THE ORIGINAL DRAWING.

DATE AUGUST 2001
H & S JOB NUMBER 30631
CONTRACT NUMBER 1
DRAWING NUMBER M106
H&S FLAT FILE NO. 56

11/06/01 9:01am FILE= H:\30631\MECH\M102 by ECPLANTER XREFs=MISC\30631-TB, 100\DT-M-S01,

35-004-019

NOTES:

1 FOR SEQUENCING OF DEMOLITION WORK, SEE SPECIFICATIONS SECTION 01520– MAINTENANCE OF PLANT OPERATIONS DURING CONSTRUCTION.

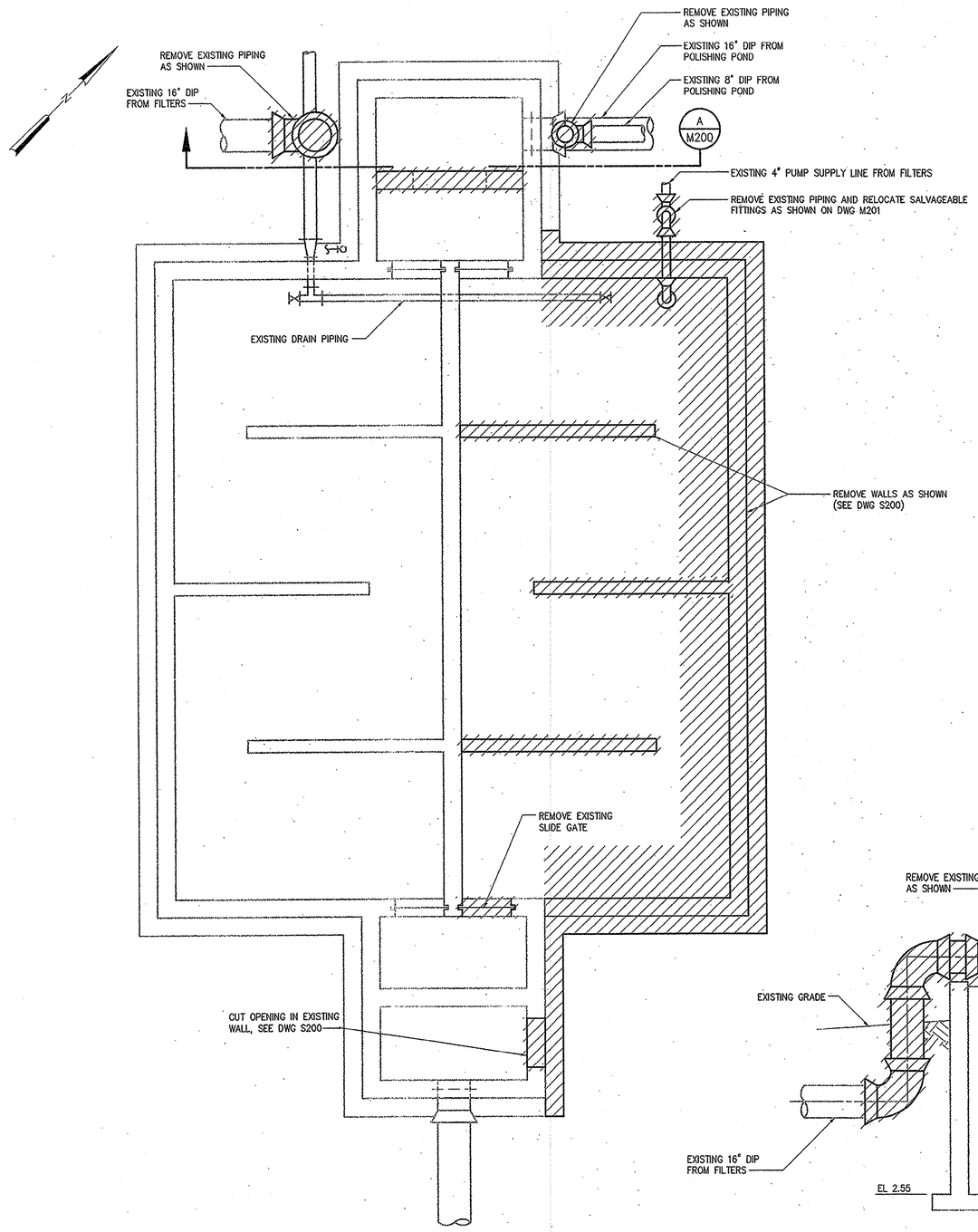

DEMOLITION – BOTTOM PLAN

3/8"= 1'-0"

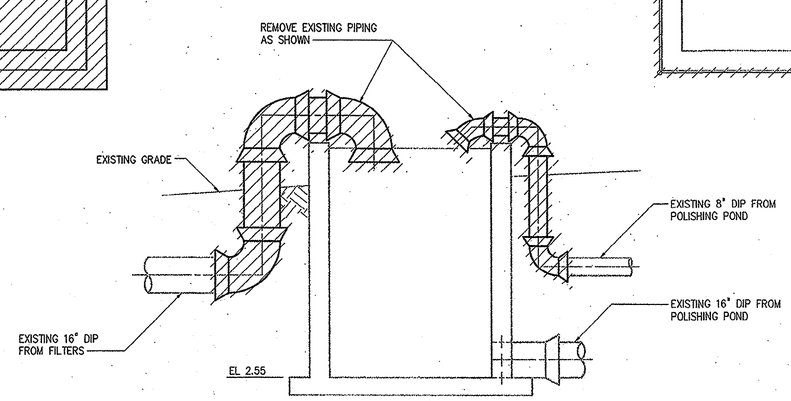

SECTION A M200

3/8"=1'-0"

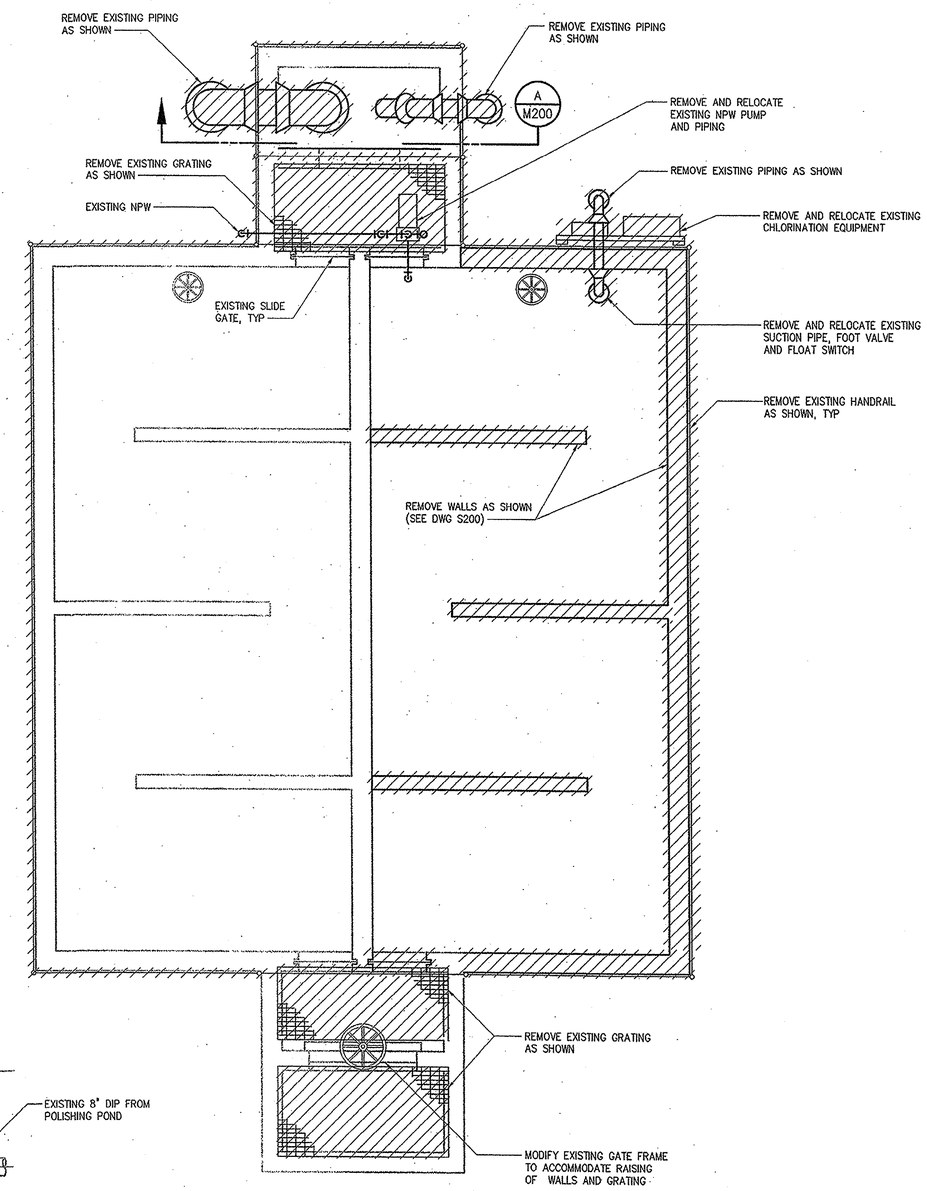

DEMOLITION – TOP PLAN

3/8"= 1'-0"

NO.	ISSUED FOR	DATE	BY
2	CONSTRUCTION	11/16/01	JBM
1	REGULATORY APPROVAL	8-31-01	JBM

DESIGNED JWAB
DRAWN EWN
CHECKED JBM
PROJ. ENGR. JBM
APPROVED

SOUTH CAROLINA PROFESSIONAL ENGINEER No.16512 REGISTERED RONALD L. TAYLOR 11/16/01

SOUTH CAROLINA PROFESSIONAL ENGINEER No.10488 REGISTERED JAMES B. MEEKS 11/16/01

HAZEN AND SAWYER
Environmental Engineers & Scientists
4011 WestChase Blvd, Raleigh, North Carolina 27607

GRAND STRAND WATER AND SEWER AUTHORITY
SOUTH CAROLINA

CONWAY WWTP
4.0 MGD EXPANSION AND UPGRADE

UV DISINFECTION TANK
MECHANICAL
DEMOLITION PLANS

THE SCALE BAR SHOWN BELOW MEASURES ONE INCH LONG ON THE ORIGINAL DRAWING.

DATE AUGUST 2001
H & S JOB NUMBER 30631
CONTRACT NUMBER 1
DRAWING NUMBER M200
H&S FLAT FILE NO. 56

08/13/01 5:10pm FILE= H:\30631\MECH\M200 by EWNG XREFS=200\CC-PB, 200\CC-PT, MISC\30631-TB, 200\CC-S03,

35-004-020

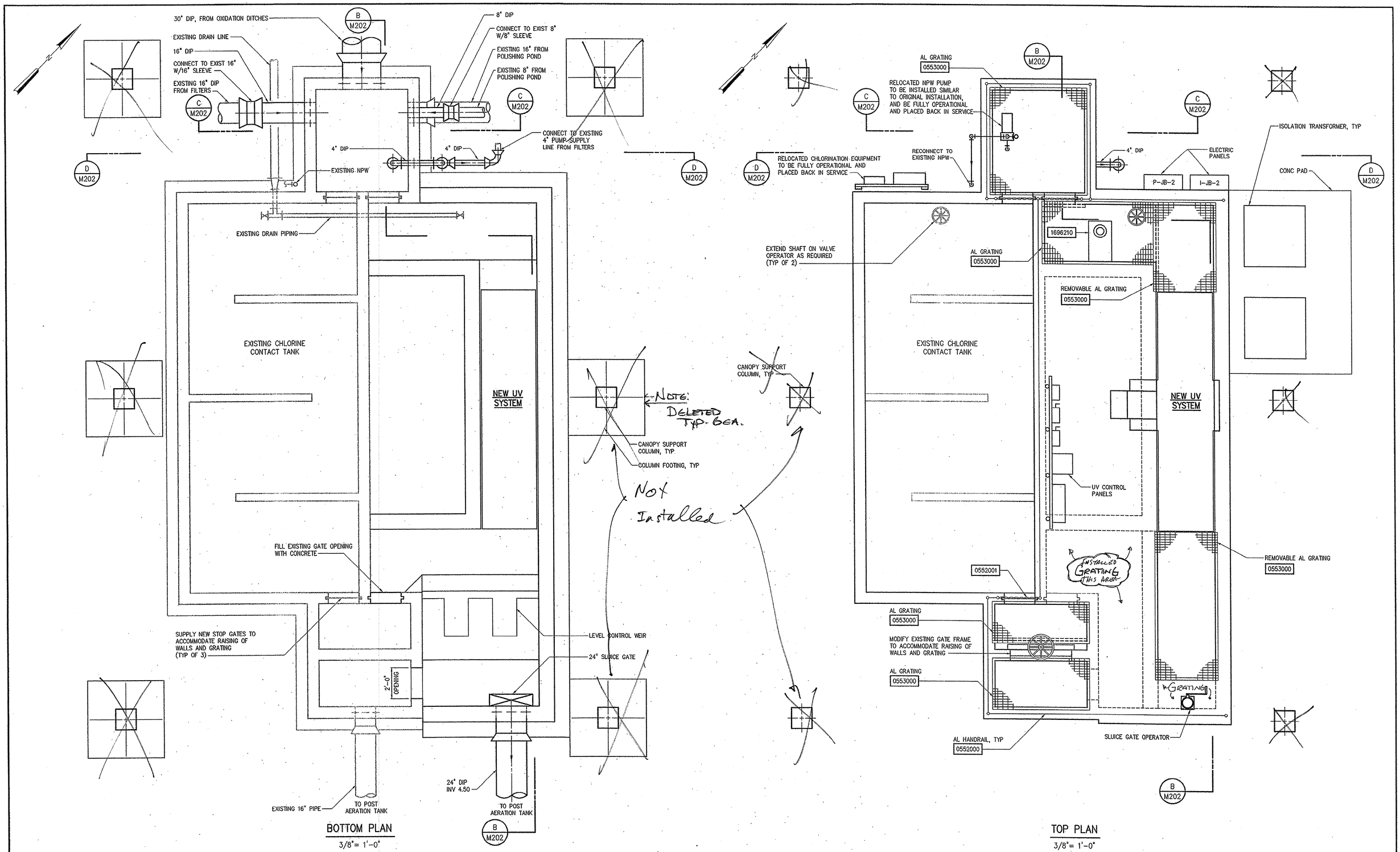

NO.	ISSUED FOR	DATE	BY
2	CONSTRUCTION	11/16/01	JBM
1	REGULATORY APPROVAL	8-31-01	JBM

DESIGNED JWAB
DRAWN EWN
CHECKED JBM
PROJ. ENGR. JBM
APPROVED

SOUTH CAROLINA PROFESSIONAL ENGINEER REGISTERED No. 16542 RONALD L. TAYLOR 11/16/01

SOUTH CAROLINA PROFESSIONAL ENGINEER REGISTERED No. 10488 JOSEPH B. MEEKS 11/16/01

HAZEN AND SAWYER
Environmental Engineers & Scientists
4011 WestChase Blvd, Raleigh, North Carolina 27607

GRAND STRAND WATER AND SEWER AUTHORITY
SOUTH CAROLINA

CONWAY WWTP
4.0 MGD EXPANSION AND UPGRADE

UV DISINFECTION TANK
MECHANICAL
TOP PLAN AND BOTTOM PLAN

THE SCALE BAR SHOWN BELOW MEASURES ONE INCH LONG ON THE ORIGINAL DRAWING.

DATE AUGUST 2001
H & S JOB NUMBER 30631
CONTRACT NUMBER 1
DRAWING NUMBER M201
H&S FLAT FILE NO. 56

2001

35-004-021

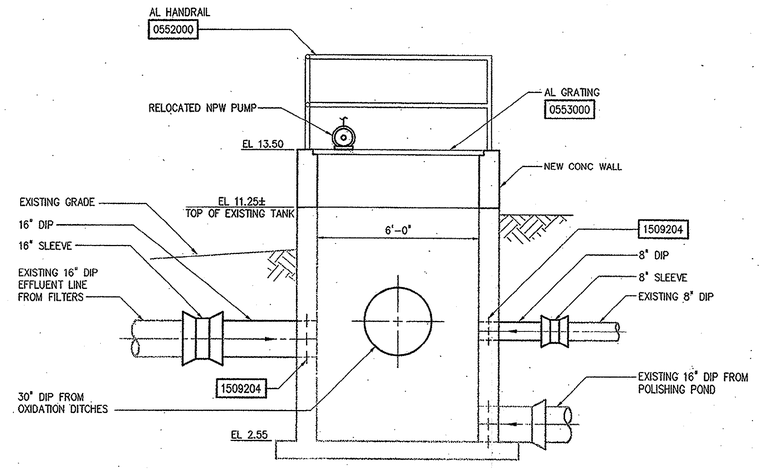

SECTION C / M201
3/8"=1'-0"

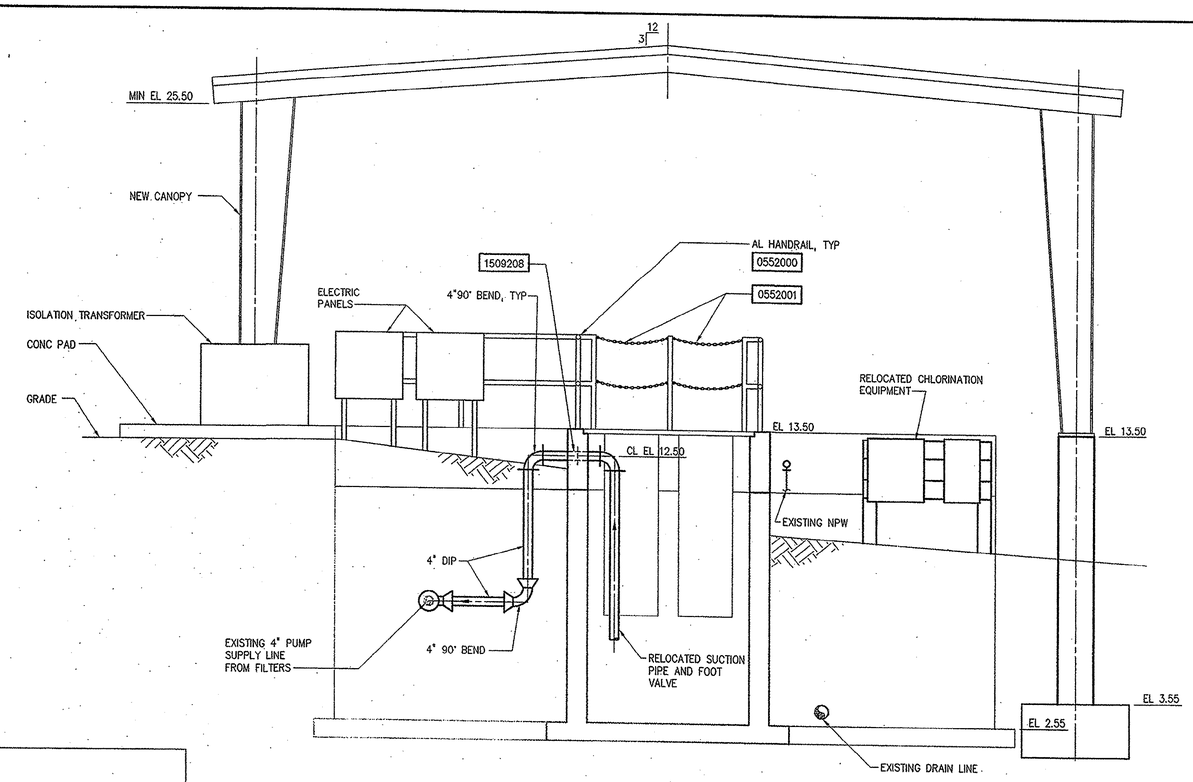

SECTION D / M201
3/8"=1'-0"

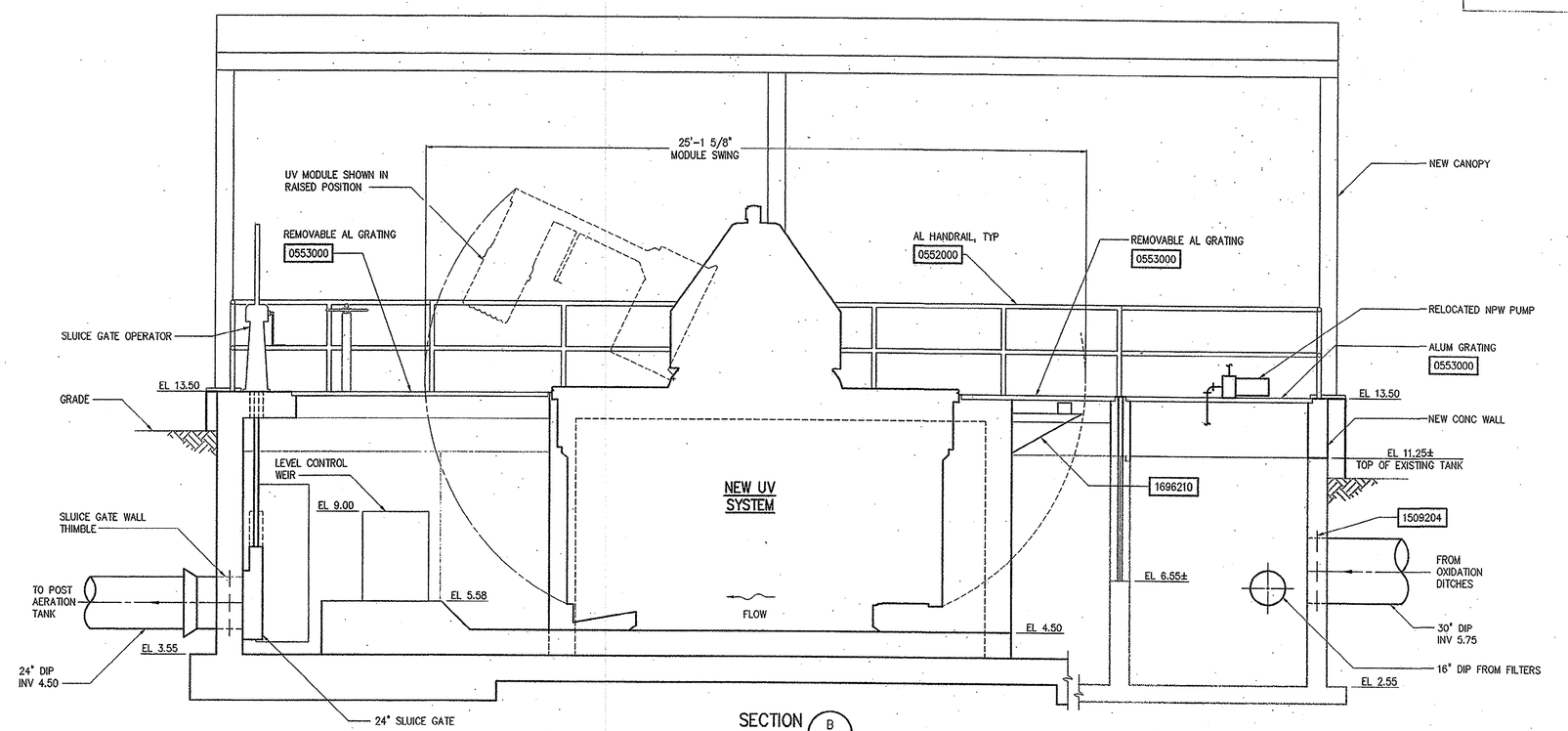

SECTION B / M201
3/8"=1'-0"

NO.	ISSUED FOR	DATE	BY
2	CONSTRUCTION	11/16/01	JBM
1	REGULATORY APPROVAL	8-31-01	JBM

DESIGNED JWAB
DRAWN EWN
CHECKED JBM
PROJ. ENGR. JBM
APPROVED

SOUTH CAROLINA REGISTERED PROFESSIONAL ENGINEER No.16910 RONALD L. TAYLOR 11/16/01

SOUTH CAROLINA REGISTERED PROFESSIONAL ENGINEER No.10488 HASSAN B. MEEKS 11/16/01

HAZEN AND SAWYER
Environmental Engineers & Scientists
4011 WestChase Blvd, Raleigh, North Carolina 27607

GRAND STRAND WATER AND SEWER AUTHORITY
SOUTH CAROLINA

CONWAY WWTP
4.0 MGD EXPANSION AND UPGRADE

UV DISINFECTION TANK
MECHANICAL
SECTIONS

THE SCALE BAR SHOWN BELOW MEASURES ONE INCH LONG ON THE ORIGINAL DRAWING.

DATE AUGUST 2001
H & S JOB NUMBER 30631
CONTRACT NUMBER 1
DRAWING NUMBER M202
H&S FLAT FILE NO. 56

08/14/01 8:58am FILE= H:\30631\MECH\M202 by EWNG XREFs=200\CC-S02, MISC\30631-TB, 200\CC-S03,

33-004-022

NOTES:

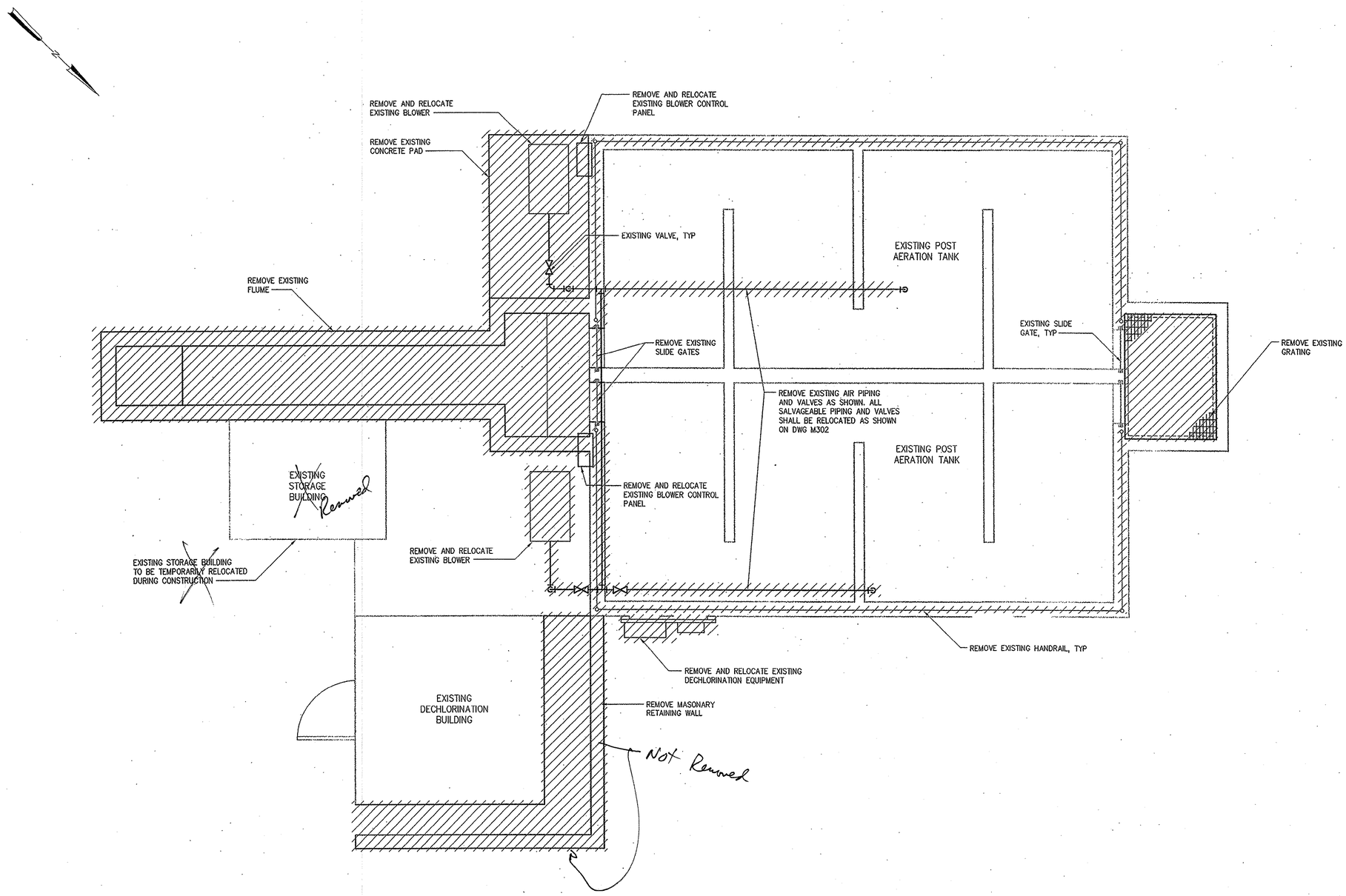

DEMOLITION PLAN

3/8"= 1'-0"

NO.	ISSUED FOR	DATE	BY
2	CONSTRUCTION	11/16/01	SBM
1	REGULATORY APPROVAL	8-31-01	JBM

DESIGNED JWAB
DRAWN JTB
CHECKED JBM
PROJ. ENGR. JBM
APPROVED

SOUTH CAROLINA PROFESSIONAL ENGINEER No.18512 REGISTERED RONALD L. TAYLOR 11/16/01

SOUTH CAROLINA PROFESSIONAL ENGINEER No.10488 REGISTERED RALPH B. MEEKS 11/16/01

HAZEN AND SAWYER
Environmental Engineers & Scientists
4011 WestChase Blvd, Raleigh, North Carolina 27607

GRAND STRAND WATER AND SEWER AUTHORITY
SOUTH CAROLINA

CONWAY WWTP
4.0 MGD EXPANSION AND UPGRADE

POST AERATION TANK MODIFICATIONS
MECHANICAL
DEMOLITION PLAN

THE SCALE BAR SHOWN BELOW MEASURES ONE INCH LONG ON THE ORIGINAL DRAWING.

DATE AUGUST 2001
H & S JOB NUMBER 30631
CONTRACT NUMBER 1
DRAWING NUMBER M300
H&S FLAT FILE NO. 56

11/16/01 11:49am FILE= H:\30631\MECH\M300 by ECPLANTER XREFs=MISC\30631-TB, 300\DC-PT,

35-004-023

NOTES:

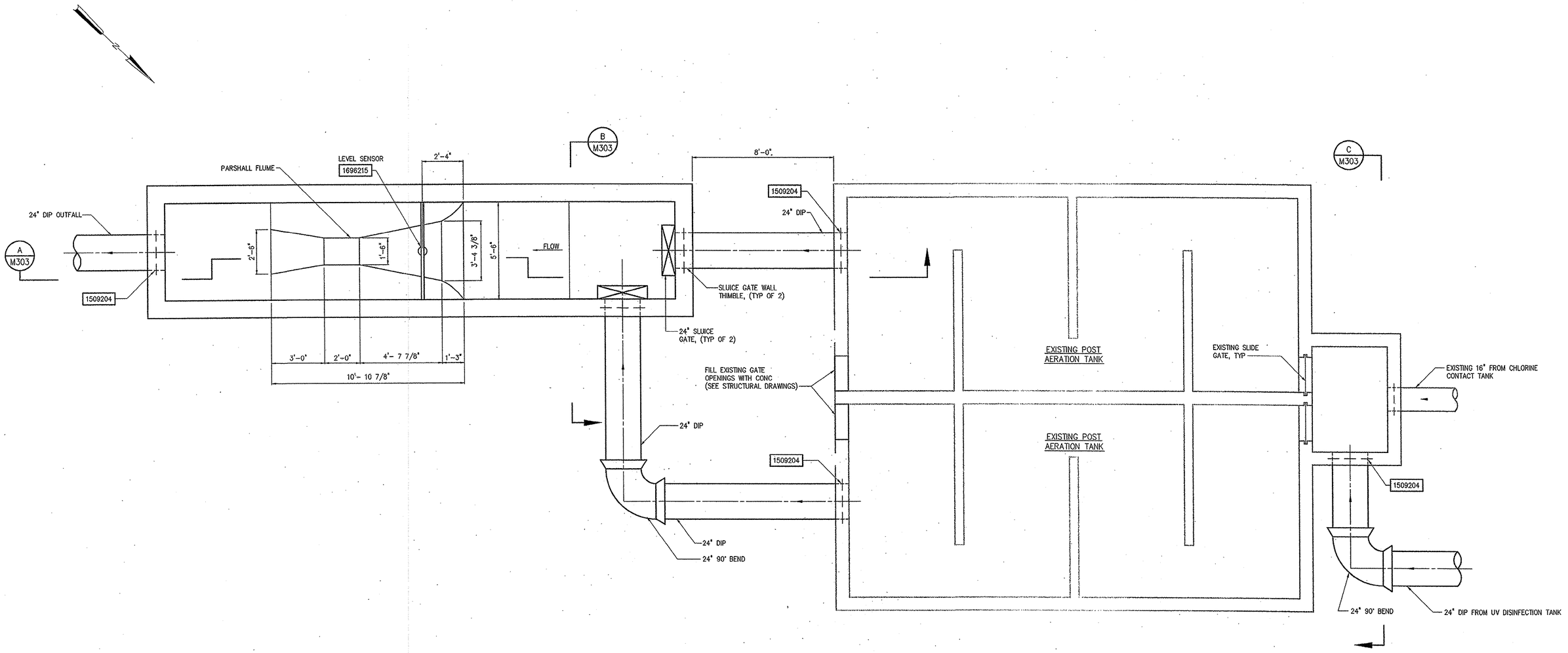

BOTTOM PLAN

3/8"= 1'-0"

NO.	ISSUED FOR	DATE	BY
2	CONSTRUCTION	11/16/01	JBM
1	REGULATORY APPROVAL	8-31-01	JBM

DESIGNED JWAB
DRAWN JTB
CHECKED JBM
PROJ. ENGR. JBM
APPROVED

SOUTH CAROLINA REGISTERED PROFESSIONAL ENGINEER No. 16512 RONALD L. TAYLOR 11/16/01

SOUTH CAROLINA REGISTERED PROFESSIONAL ENGINEER No.10488 KENNETH B. MECKS JR. 11/16/01

HAZEN AND SAWYER
Environmental Engineers & Scientists
4011 WestChase Blvd, Raleigh, North Carolina 27607

GRAND STRAND WATER AND SEWER AUTHORITY
SOUTH CAROLINA

CONWAY WWTP
4.0 MGD EXPANSION AND UPGRADE

POST AERATION TANK MODIFICATIONS
MECHANICAL
BOTTOM PLAN

THE SCALE BAR SHOWN BELOW MEASURES ONE INCH LONG ON THE ORIGINAL DRAWING.

DATE AUGUST 2001
H & S JOB NUMBER 30631
CONTRACT NUMBER 1
DRAWING NUMBER M301
H&S FLAT FILE NO. 56

08/22/01 4:16pm FILE= H:\30631\MECH\M301 by EWNG XREFs=MISC\30631-TB, 300\DC-PB,

35-004-024

NOTES:

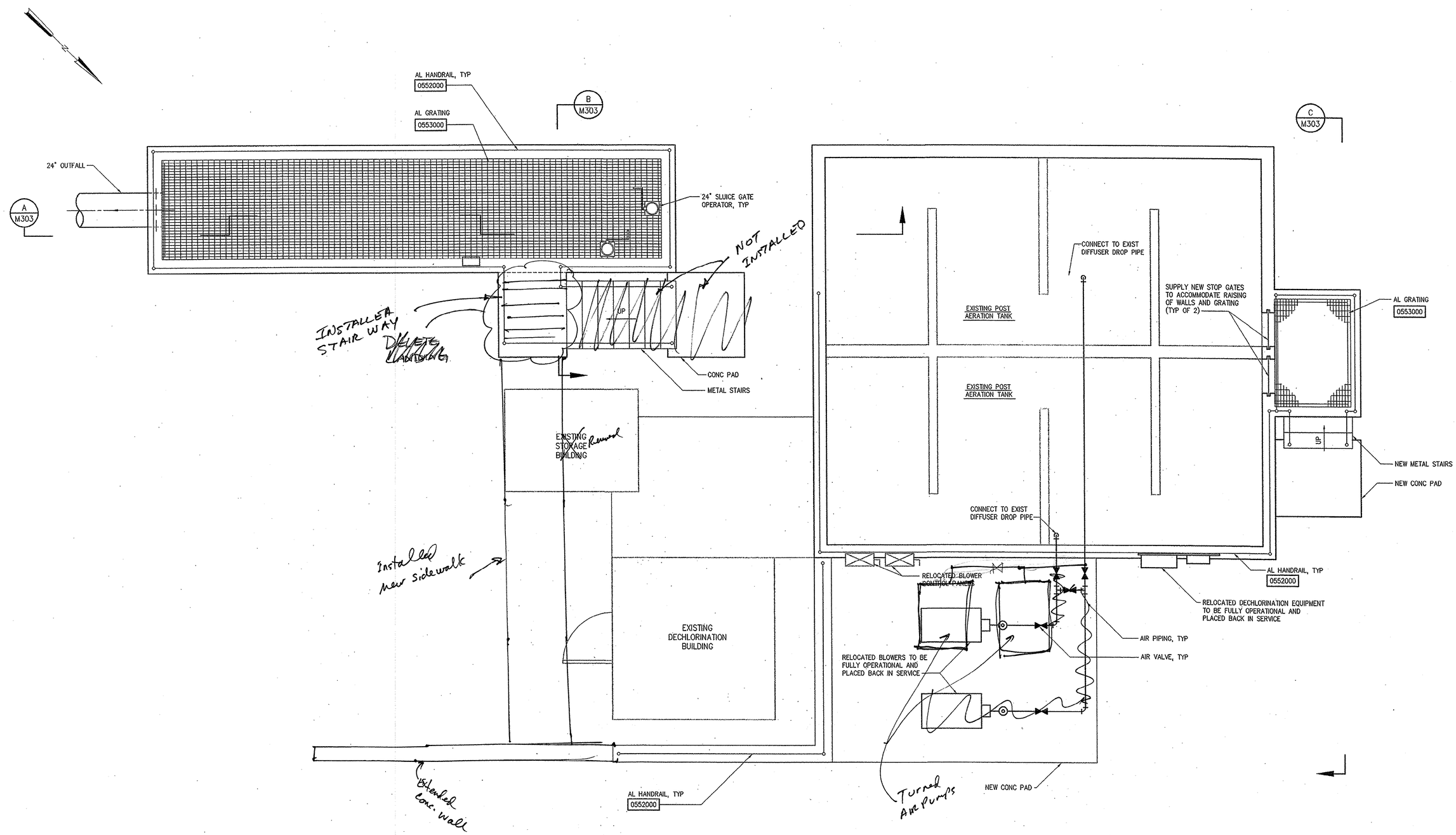

TOP PLAN

3/8" = 1'-0"

NO.	ISSUED FOR	DATE	BY
2	CONSTRUCTION	11/16/01	JBM
1	REGULATORY APPROVAL	8-31-01	JBM

DESIGNED JWAB
DRAWN JTB
CHECKED RLT
PROJ. ENGR. JBM
APPROVED RLT

SOUTH CAROLINA REGISTERED PROFESSIONAL ENGINEER No. 18612 RONALD L. TAYLOR 11/16/01

SOUTH CAROLINA REGISTERED PROFESSIONAL ENGINEER No.10488 JOSEPH B. MEEKS 11/16/01

HAZEN AND SAWYER
Environmental Engineers & Scientists
4011 WestChase Blvd, Raleigh, North Carolina 27607

GRAND STRAND WATER AND SEWER AUTHORITY
SOUTH CAROLINA

CONWAY WWTP
4.0 MGD EXPANSION AND UPGRADE

POST AERATION TANK MODIFICATIONS
MECHANICAL
TOP PLAN

THE SCALE BAR SHOWN BELOW MEASURES ONE INCH LONG ON THE ORIGINAL DRAWING.

DATE AUGUST 2001
H & S JOB NUMBER 30631
CONTRACT NUMBER 1
DRAWING NUMBER M302
H&S FLAT FILE NO. 56

06/22/01 4:20pm FILE~ H:\30631\MECH\M302 by EWWC XREFs=MBSC\30631-TB, 300\DC-PT,

35-004-025

NOTES:

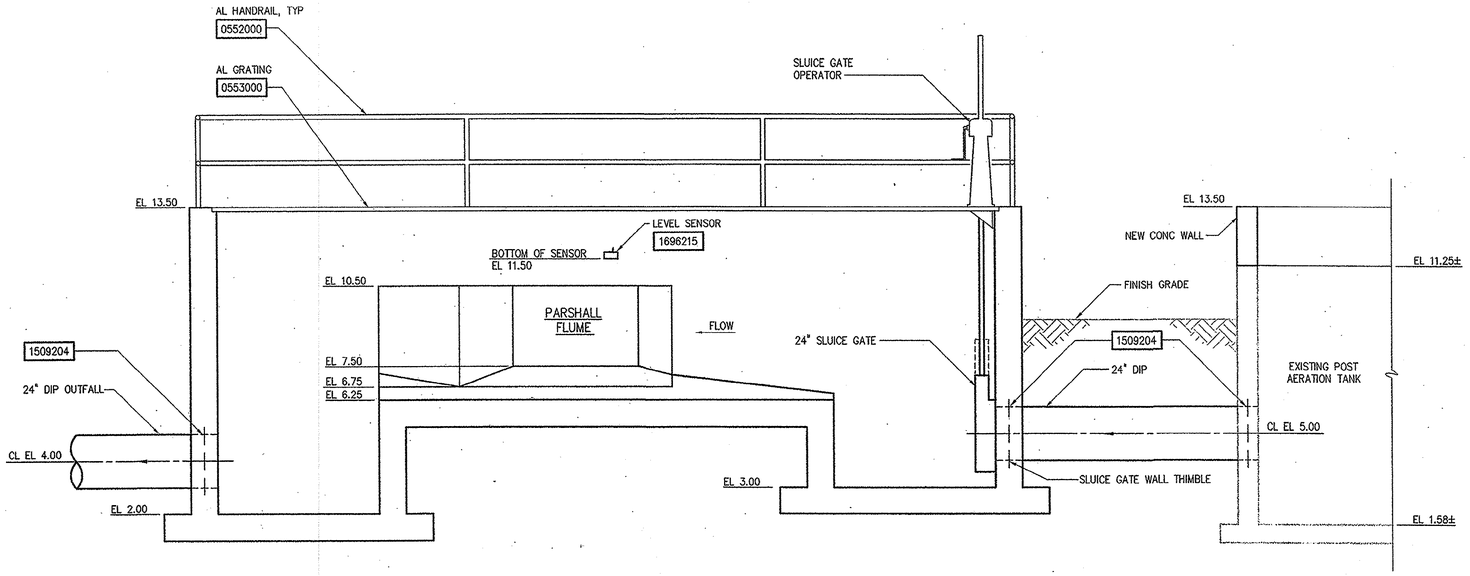

SECTION A M301
3/8"=1'-0"

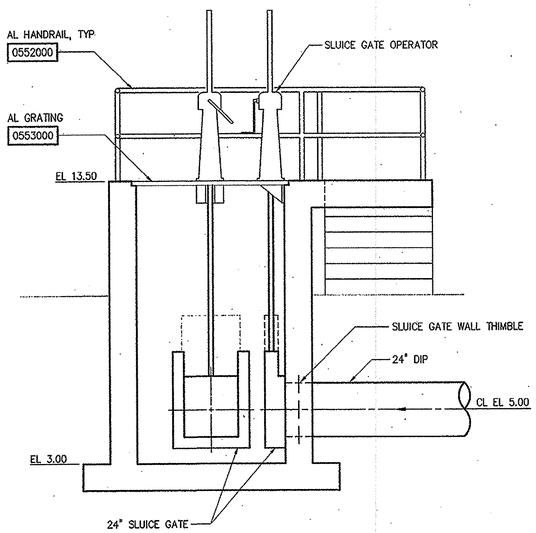

SECTION B. M301
3/8"=1'-0"

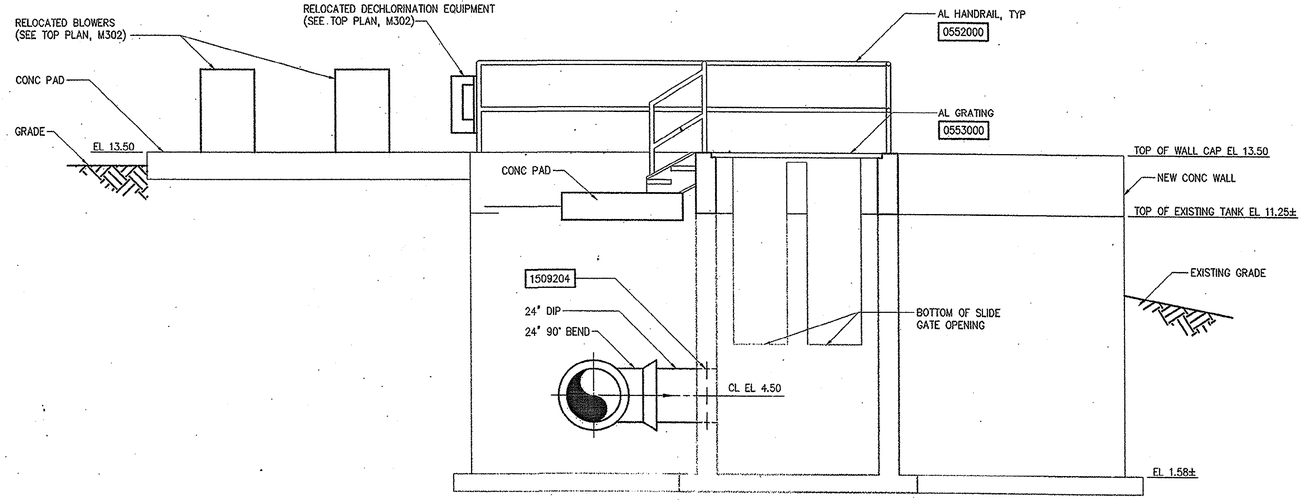

SECTION C M301
3/8"=1'-0"

NO.	ISSUED FOR	DATE	BY
2	CONSTRUCTION	11/16/01	JBM
1	REGULATORY APPROVAL	8-31-01	JBM

DESIGNED JWAB
DRAWN JTB
CHECKED JBM
PROJ. ENGR. JBM
APPROVED

SOUTH CAROLINA PROFESSIONAL ENGINEER No. 16612 REGISTERED RONALD L. TAYLOR 11/16/01

SOUTH CAROLINA REGISTERED PROFESSIONAL ENGINEER No.10488 HASSON B. MEEKS 11/16/01

HAZEN AND SAWYER
Environmental Engineers & Scientists
4011 WestChase Blvd, Raleigh, North Carolina 27607

GRAND STRAND WATER AND SEWER AUTHORITY
SOUTH CAROLINA

CONWAY WWTP
4.0 MGD EXPANSION AND UPGRADE

POST AERATION TANK MODIFICATIONS
MECHANICAL
SECTIONS

THE SCALE BAR SHOWN BELOW MEASURES ONE INCH LONG ON THE ORIGINAL DRAWING.

DATE AUGUST 2001
H & S JOB NUMBER 30631
CONTRACT NUMBER 1
DRAWING NUMBER M303
H&S FLAT FILE NO. 56

08/22/01 4:13pm FILE= H:\30631\MECH\M303 by CWNG XREFs=MISC\30831-TB, 300\DC-S01, 300\DC-S02, 300\DC-S03,

35-004-026

GENERAL NOTES:

1. FIBER OPTIC CONNECTORS AND TERMINATIONS WILL BE PROVIDED BY THE OWNER.
2. EXCEPT AS NOTED, FIBER OPTIC CABLE AND ASSOCIATED CONDUIT SHALL BE FURNISHED AND INSTALLED UNDER DIVISION 16 BY THE ELECTRICAL SUBCONTRACTOR.

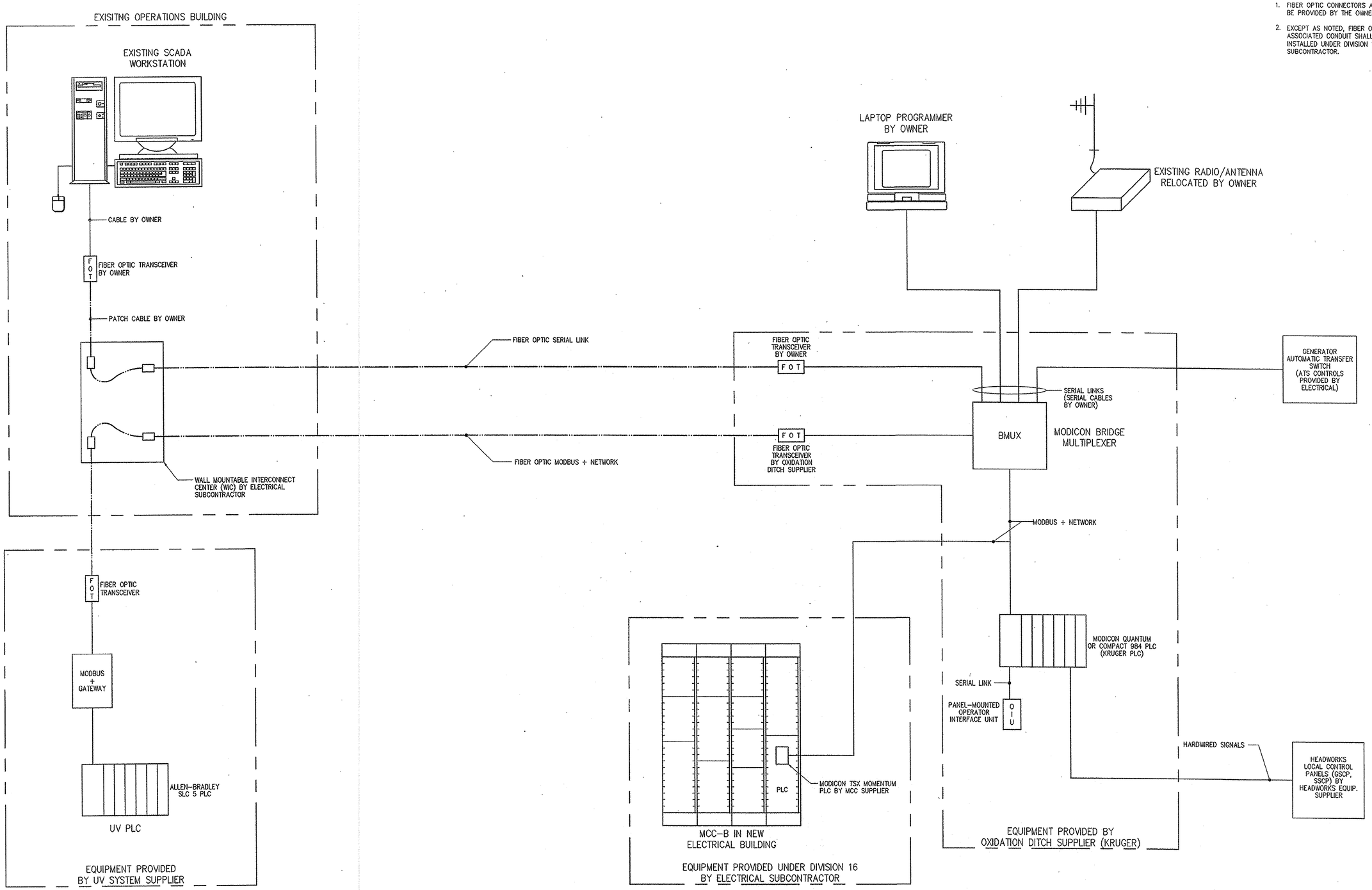

NO.	ISSUED FOR	DATE	BY
2	CONSTRUCTION	11/16/01	JBM
1	REGULATORY APPROVAL	8-31-01	JBM

DESIGNED DBE
DRAWN CMG
CHECKED GOM
PROJ. ENGR. JBM
APPROVED

SOUTH CAROLINA REGISTERED PROFESSIONAL ENGINEER No.18512 RONALD L. TAYLOR 11/16/01

SOUTH CAROLINA REGISTERED PROFESSIONAL ENGINEER No.10488 JOSEPH B. MEEKS 11/16/01

SOUTH CAROLINA REGISTERED PROFESSIONAL ENGINEER No.17210 DAVID J. RATASKY 11/15/01

HAZEN AND SAWYER
Environmental Engineers & Scientists
4011 WestChase Blvd, Raleigh, North Carolina 27607

GRAND STRAND WATER AND SEWER AUTHORITY
SOUTH CAROLINA

CONWAY WWTP
4.0 MGD EXPANSION AND UPGRADE

INSTRUMENTATION
CONTROL SYSTEM BLOCK DIAGRAM

THE SCALE BAR SHOWN BELOW MEASURES ONE INCH LONG ON THE ORIGINAL DRAWING.

DATE AUGUST 2001
H & S JOB NUMBER 30631
CONTRACT NUMBER 1
DRAWING NUMBER I1
H&S FLAT FILE NO. 56

11/15/01 9:56am FILE= H:\30631\ELEC\D01 by ADMINISTRATOR XREF=MISC\30631-TB,

35-004-027

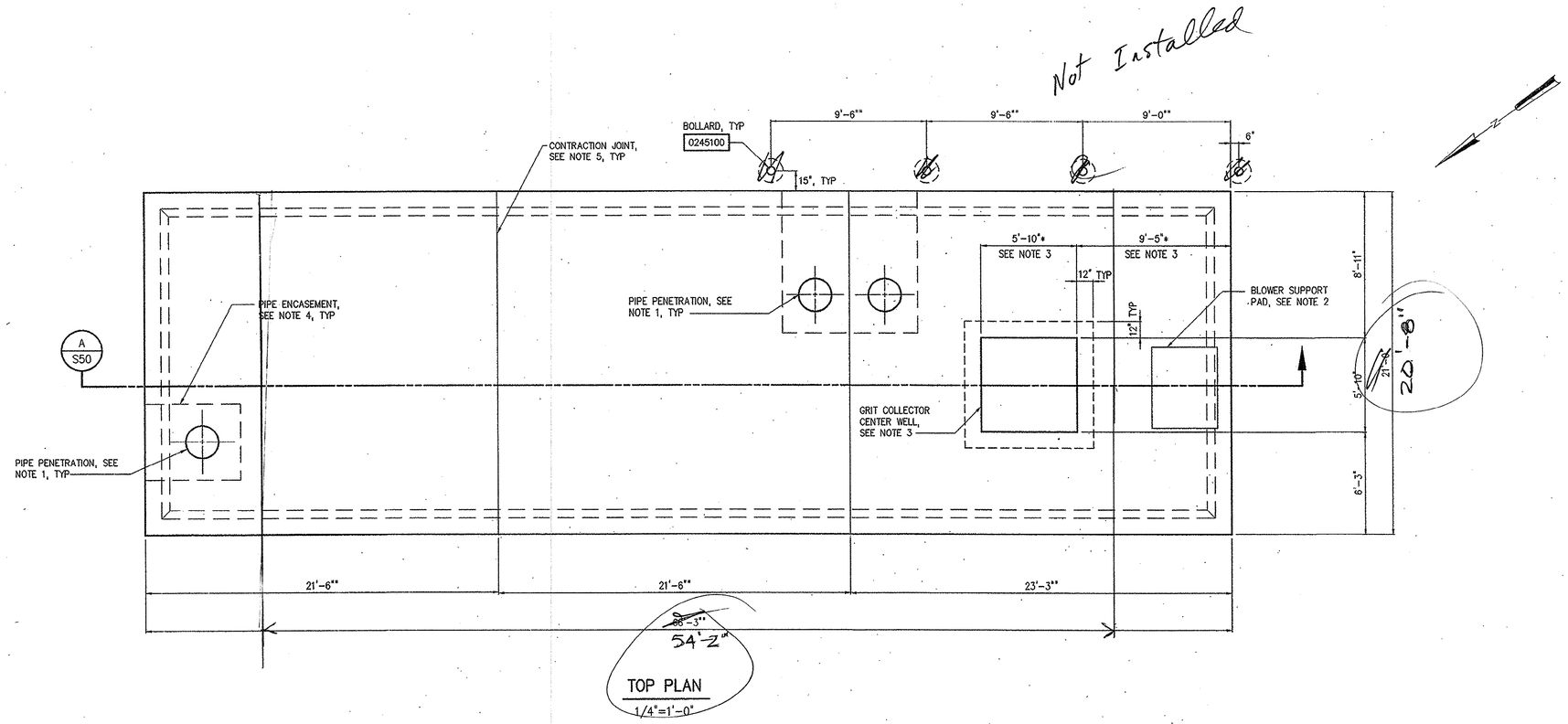

TOP PLAN

1/4"=1'-0"

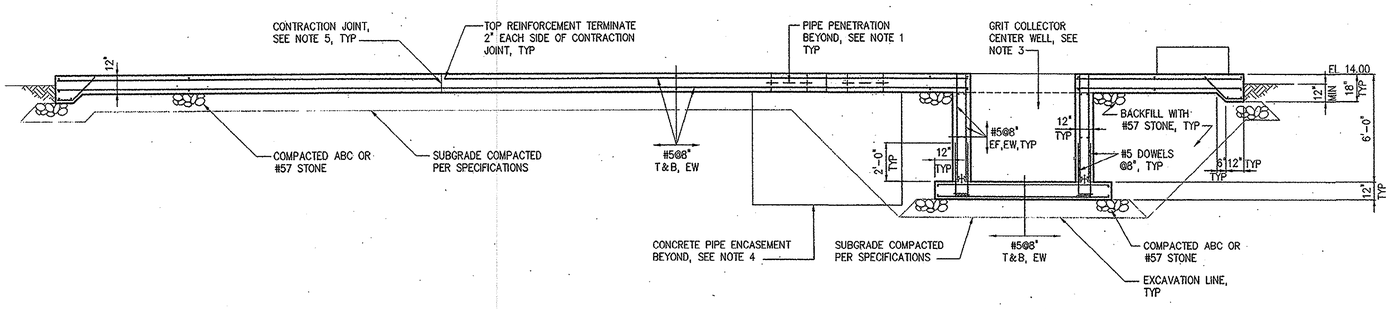

SECTION A/S50

1/4"=1'-0"

NOTES:

1. FOR LOCATION, SIZE, AND TYPE OF PIPE PENETRATIONS, SEE MECHANICAL DRAWINGS. COORDINATE PIPE PENETRATIONS WITH MANUFACTURER OF SCREENING AND GRIT REMOVAL FACILITY.
2. FOR EQUIPMENT PAD LOCATIONS AND GEOMETRY, SEE MECHANICAL DRAWINGS AND COORDINATE WITH MANUFACTURER OF SCREENING AND GRIT REMOVAL FACILITY. FOR EQUIPMENT PAD REINFORCEMENT, SEE DETAIL 0331600.
3. GRIT COLLECTOR CENTER WELL SHALL BE SIZED SUCH THAT A MINIMUM OF SIX INCHES OF NON-SHRINK GROUT CAN BE PLACED BETWEEN CIRCULAR WALL OF GRIT COLLECTOR CENTER WELL AND CONCRETE WALL. COORDINATE LOCATION OF GRIT COLLECTOR CENTER WELL WITH MECHANICAL DRAWINGS AND MANUFACTURER OF SCREENING AND GRIT REMOVAL FACILITY.
4. ALL PIPES BELOW SLAB FOR SCREENING AND GRIT REMOVAL FACILITY SHALL BE ENCASED WITH CLASS "B" CONCRETE A MINIMUM OF 12" ALL AROUND THE PIPE.
5. COORDINATE LOCATION OF CONTRACTION JOINTS WITH MANUFACTURER OF SCREENING AND GRIT REMOVAL FACILITY. CONTRACTION JOINTS SHALL NOT BE LOCATED DIRECTLY BENEATH A SUPPORT OR BASE PLATE FOR ANY COMPONENT OF FACILITY. FOR TYPICAL CONTRACTION JOINT, SEE DETAIL 0325101.

NO.	ISSUED FOR	DATE	BY
2	CONSTRUCTION	11/16/01	JBM
1	REGULATORY APPROVAL	8-31-01	JBM

DESIGNED CTP
DRAWN JDM
CHECKED CTP
PROJ. ENGR. JBM
APPROVED

SOUTH CAROLINA PROFESSIONAL ENGINEER REGISTRATION No. 10512 RONALD L. TAYLOR 11/16/01

SOUTH CAROLINA REGISTERED PROFESSIONAL ENGINEER No. 20774 CHRISTOPHER T. PHILLIPS 11/19/01

HAZEN AND SAWYER
Environmental Engineers & Scientists
4011 WestChase Blvd, Raleigh, North Carolina 27607

GRAND STRAND WATER AND SEWER AUTHORITY
SOUTH CAROLINA

CONWAY WWTP
4.0 MGD EXPANSION AND UPGRADE

HEADWORKS FACILITIES
STRUCTURAL
PLAN AND SECTIONS

THE SCALE BAR SHOWN BELOW MEASURES ONE INCH LONG ON THE ORIGINAL DRAWING.

DATE AUGUST 2001
H & S JOB NUMBER 30631
CONTRACT NUMBER 1A
DRAWING NUMBER S50
H&S FLAT FILE NO. 56.

11/08/01 3:14pm FILE= H:\30631\STRU\S050 by DAN MCCOLLUM XREFs=050\HW-TP, 050\HW-S01-S, MISC\30631-TB.

35-004-028

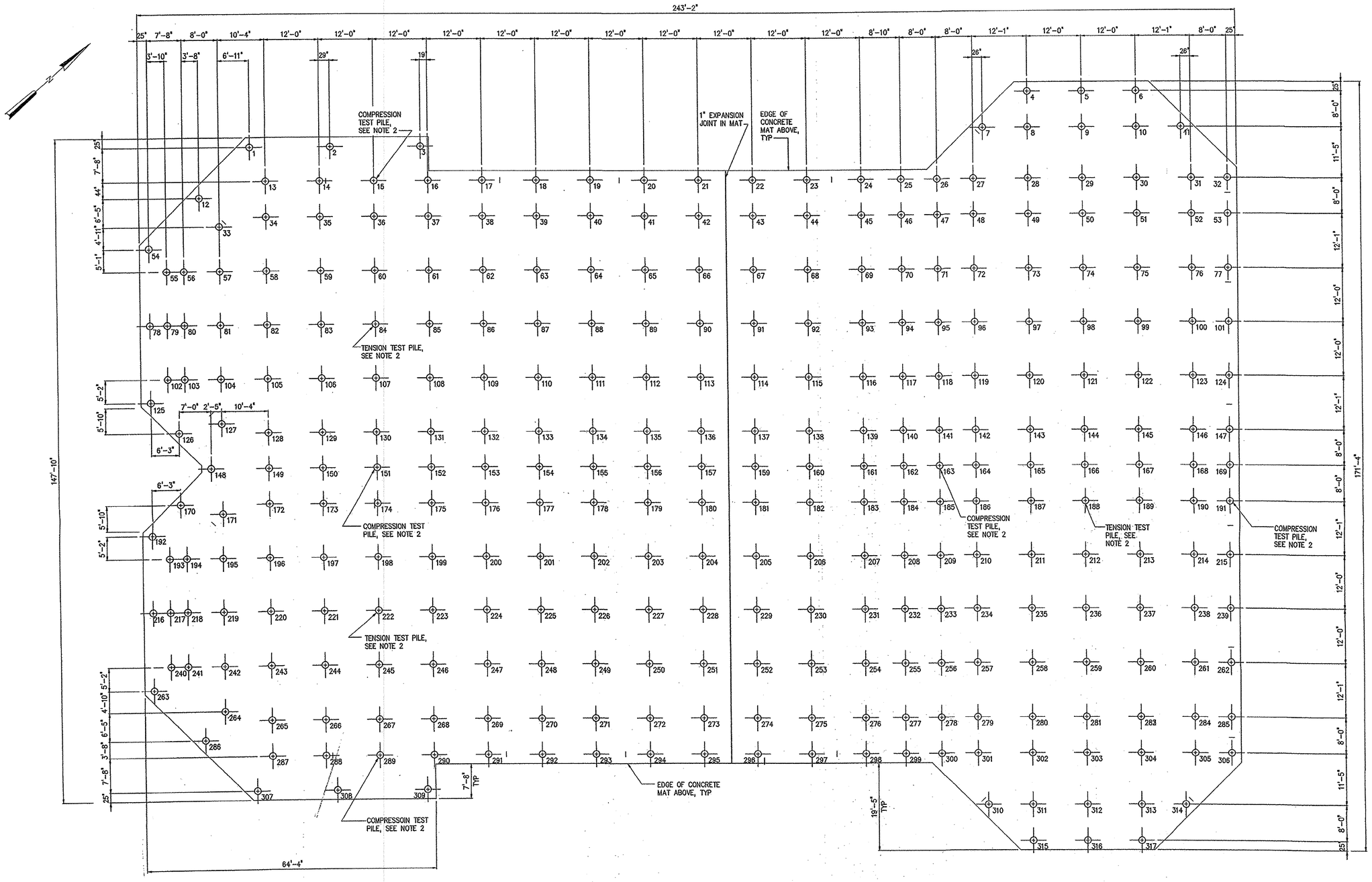

FOUNDATION PLAN

3/32"=1'-0"

NOTES:

1. ALL PILES SHALL BE EIGHTEEN (18) INCH DIAMETER AUGER CAST PRESSURE– INJECTED GROUT PILES. PILES SHALL BE INSTALLED AS REQUIRED TO DEVELOP A MINIMUM VERTICAL DOWNWARD WORKING LOAD OF 90 TONS (180 TONS ULTIMATE CAPACITY) AND A MINIMUM UPLIFT WORKING LOAD OF 30 TONS (60 TONS ULTIMATE CAPACITY). PILES SHALL BE EMBEDDED A MINIMUM OF THIRTY (30) FEET BELOW BOTTOM OF CONCRETE MAT.
2. A MINIMUM OF FIVE (5) PILES SHALL BE TESTED IN COMPRESSION IN ACCORDANCE WITH SPECIFICATIONS. THREE (3) ADDITIONAL PILES SHALL BE TESTED IN TENSION IN ACCORDANCE WITH SPECIFICATIONS.
3. PILES SHALL BE DESIGNED AND CONSTRUCTED IN ACCORDANCE WITH SPECIFICATION 02263.
4. PILES SHALL BE EXTENDED A MINIMUM OF FOUR (4) INCHES INTO MAT FOUNDATION. FOR TYPICAL CONNECTION OF AUGER CAST PILES TO CONCRETE MAT, SEE DETAIL 1/S100.

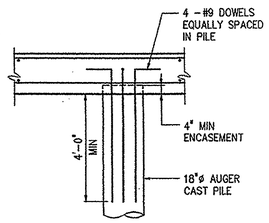

NOTES: REINFORCING SHOWN IS REQUIRED IN ALL PILES.

DETAIL 1 / S100

3/8"=1'-0"

RECEIVED APR 23 2002 ENGINEERING

NO.	ISSUED FOR	DATE	BY
3	DIMENSIONS REVISED	4-19-02	
2	CONSTRUCTION	11-16-01	
1	REGULATORY APPROVAL	8-31-01	

DESIGNED CTP
DRAWN ASC
CHECKED
PROJ. ENGR. JBM
APPROVED

SOUTH CAROLINA REGISTERED PROFESSIONAL ENGINEER No.16512 RONALD L. TAYLOR

SOUTH CAROLINA REGISTERED PROFESSIONAL ENGINEER No.20774 CHRISTOPHER T. PHILLIPS

HAZEN AND SAWYER
Environmental Engineers & Scientists
4011 WestChase Blvd, Raleigh, North Carolina 27607

GRAND STRAND WATER AND SEWER AUTHORITY
SOUTH CAROLINA

CONWAY WWTP
4.0 MGD EXPANSION AND UPGRADE

4 MGD TRIPLE DITCH AERATION BASIN
STRUCTURAL
PILE PLAN AND DETAIL

THE SCALE BAR SHOWN BELOW MEASURES ONE INCH LONG ON THE ORIGINAL DRAWING.

DATE AUGUST 2001
H & S JOB NUMBER 30631
CONTRACT NUMBER 1
DRAWING NUMBER S100
H&S FLAT FILE NO. 56

04/19/02 2:57pm FILE= H:\30631\STRU\S100 by ECPLANTER XREFs=100\DT-PB, MISC\30631-TB, 100\DT-S31,

35-004-0297

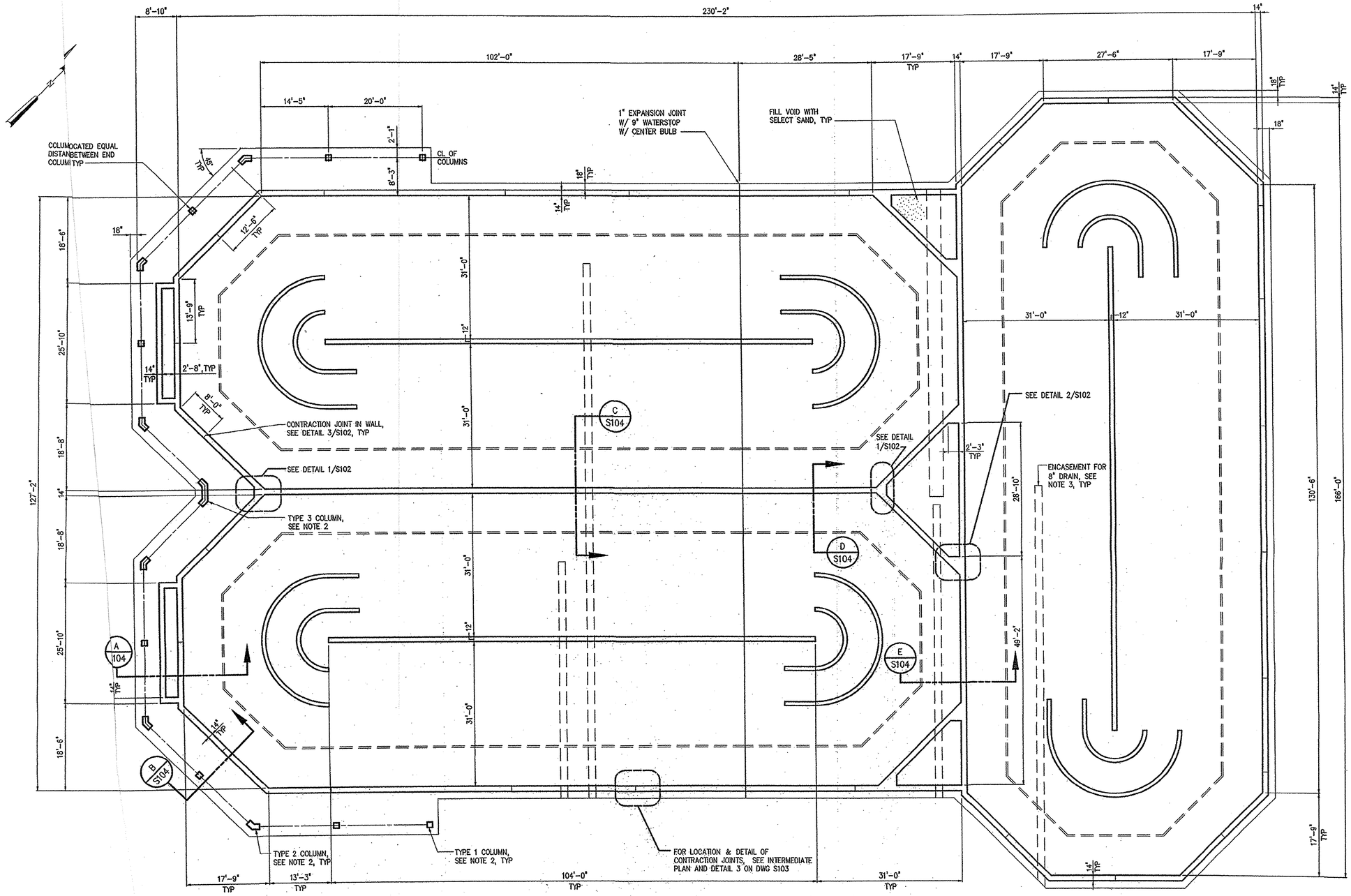

BOTTOM PLAN

3/32"=1'-0"

NOTES:

1. AUGER CAST PRESSURE- INJECTED GROUT PILES ARE NOT SHOWN FOR CLARITY. SEE DRAWING S100 FOR PILE LOCATIONS.
2. FOR TYPICAL COLUMN GEOMETRY AND REINFORCEMENT. SEE DETAIL 1/S101 FOR COLUMN ELEVATION, SEE 0331800.
3. ALL PIPES BENEATH SLAB OF AERATION BASIN SHALL BE ENCASED WITH CLASS A CONCRETE WITH A MINIMUM 12" CONCRETE ALL AROUND PIPE. PROVIDE #5@8" U-BAR DOWELS IN THE ENCASEMENT TO TIE THE ENCASEMENT INTO THE CONCRETE MAT. U-BAR SHALL SPAN BENEATH PIPE WITH LEGS OF U-BAR EXTENDING UP INTO MAT ON EACH SIDE OF PIPE. LEGS SHALL EMBED IN TOP SLAB TO ELEVATION OF TOP MAT OF REINFORCING STEEL AND TERMINATE WITH A STANDARD 90° HOOK.

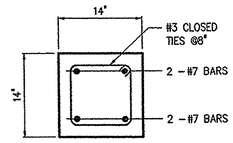

TYPE 1 (8 TOTAL)

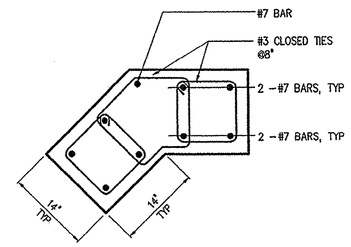

TYPE 2 (6 TOTAL)

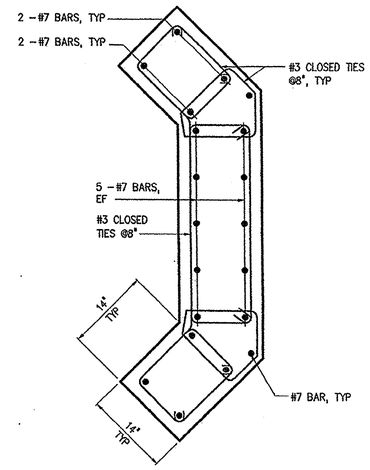

TYPE 3 (1 TOTAL)
TYPICAL COLUMNS

DETAIL 1 / S101
1"=1'-0"

NO.	ISSUED FOR	DATE	BY
3	DIMENSIONS REVISED	4-19-02	
2	CONSTRUCTION	11-16-01	
1	REGULATORY APPROVAL	8-31-01	

DESIGNED CTP
DRAWN ASC
CHECKED
PROJ. ENGR. JBM
APPROVED

SOUTH CAROLINA REGISTERED PROFESSIONAL ENGINEER No.16512 RONALD L. TAYLOR

SOUTH CAROLINA REGISTERED PROFESSIONAL ENGINEER No.20774 CHRISTOPHER T. PHILLIPS

HAZEN AND SAWYER
Environmental Engineers & Scientists
4011 WestChase Blvd, Raleigh, North Carolina 27607

GRAND STRAND WATER AND SEWER AUTHORITY
SOUTH CAROLINA

CONWAY WWTP
4.0 MGD EXPANSION AND UPGRADE

4 MGD TRIPLE DITCH AERATION BASIN
STRUCTURAL
BOTTOM PLAN AND DETAIL

THE SCALE BAR SHOWN BELOW MEASURES ONE INCH LONG ON THE ORIGINAL DRAWING.

DATE AUGUST 2001
H & S JOB NUMBER 30631
CONTRACT NUMBER 1
DRAWING NUMBER S101
H&S FLAT FILE NO. 56

04/19/02 2:56pm FILE= H:\30631\STRU\S101 by ECPLANTER XREFs=100\DT-PB, MISC\30631-TB,

35-004-030

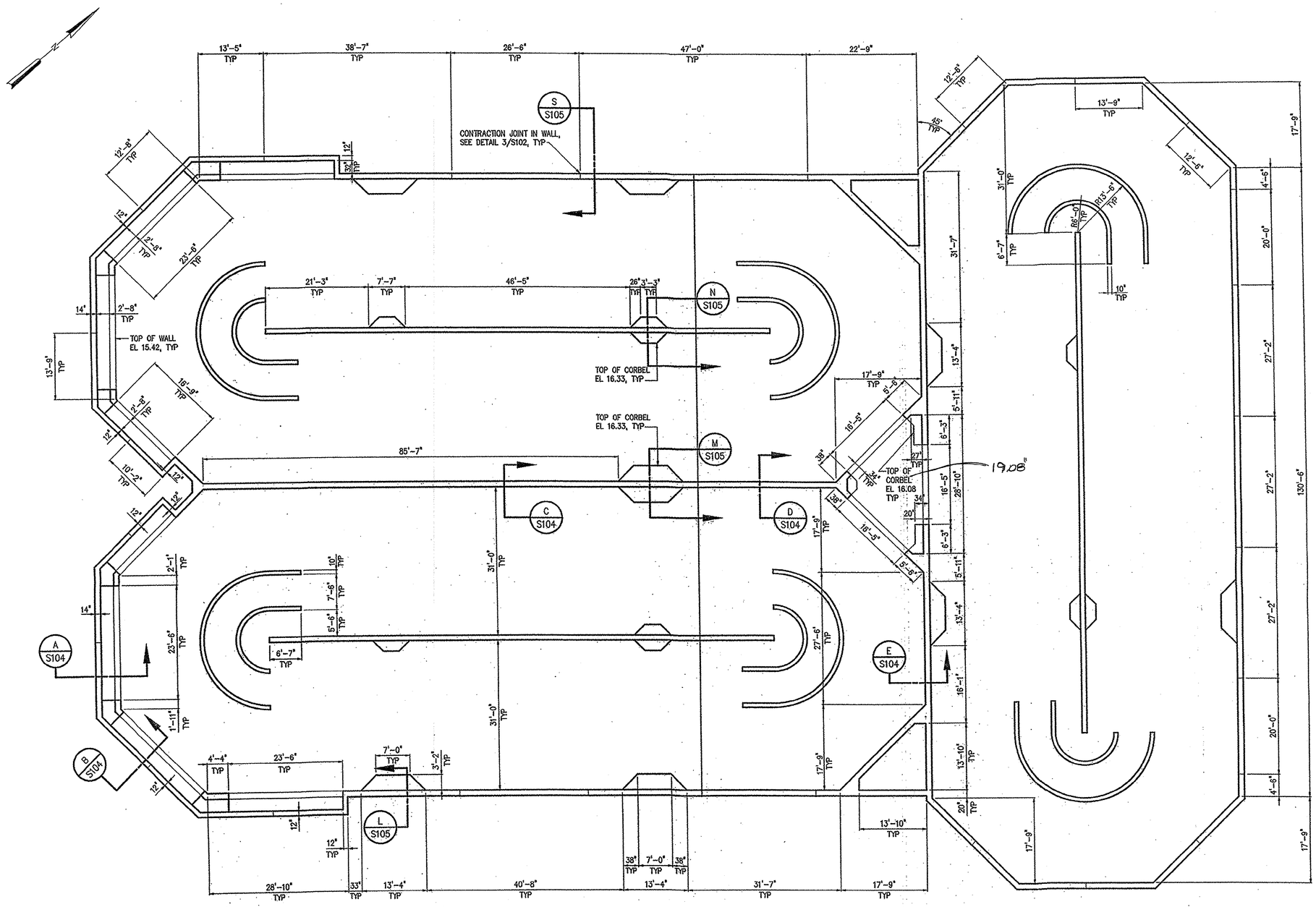

INTERMEDIATE PLAN (EL 16.50)

3/32"=1'-0"

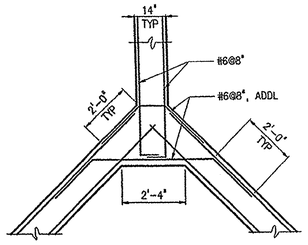

NOTE: VERTICAL REINFORCEMENT NOT SHOWN

DETAIL 1 / S101

3/8"=1'-0"

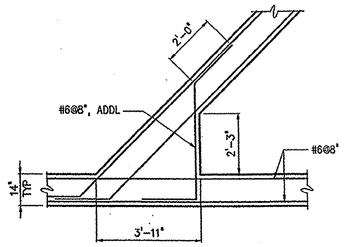

NOTE: VERTICAL REINFORCEMENT NOT SHOWN

DETAIL 2 / S101

3/8"=1'-0"

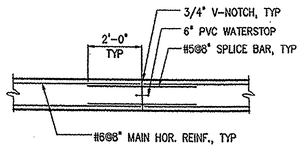

TYPICAL EXTERIOR WALL CONTRACTION JOINT

NOTE: WALL CONSTRUCTION JOINTS MAY BE LOCATED AT CONTRACTION JOINT LOCATIONS AT CONTRACTOR'S OPTION.

DETAIL 3 / S102

3/8"=1'-0"

NO.	ISSUED FOR	DATE	BY
3	DIMENSIONS REVISED	4-19-02	
2	CONSTRUCTION	11-16-01	
1	REGULATORY APPROVAL	8-31-01	

DESIGNED CTP
DRAWN ASC
CHECKED
PROJ. ENGR. JBM
APPROVED

SOUTH CAROLINA REGISTERED PROFESSIONAL ENGINEER No.16512 RONALD L. TAYLOR

SOUTH CAROLINA REGISTERED PROFESSIONAL ENGINEER No.20774 CHRISTOPHER T. PHILLIPS

HAZEN AND SAWYER
Environmental Engineers & Scientists
4011 WestChase Blvd, Raleigh, North Carolina 27607

GRAND STRAND WATER AND SEWER AUTHORITY
SOUTH CAROLINA

CONWAY WWTP
4.0 MGD EXPANSION AND UPGRADE

4 MGD TRIPLE DITCH AERATION BASIN
STRUCTURAL
INTERMEDIATE PLAN AND DETAILS

THE SCALE BAR SHOWN BELOW MEASURES ONE INCH LONG ON THE ORIGINAL DRAWING.

DATE AUGUST 2001
H & S JOB NUMBER 30631
CONTRACT NUMBER 1
DRAWING NUMBER S102
H&S FLAT FILE NO. 56

04/22/02 2:35pm FILE= H:\30631\STRU\S102 by ECPLANTER XREFs=100\DT-P1, MISC\30631-1B, 100\DT-S29, 100\DT-S30,

35-004-031

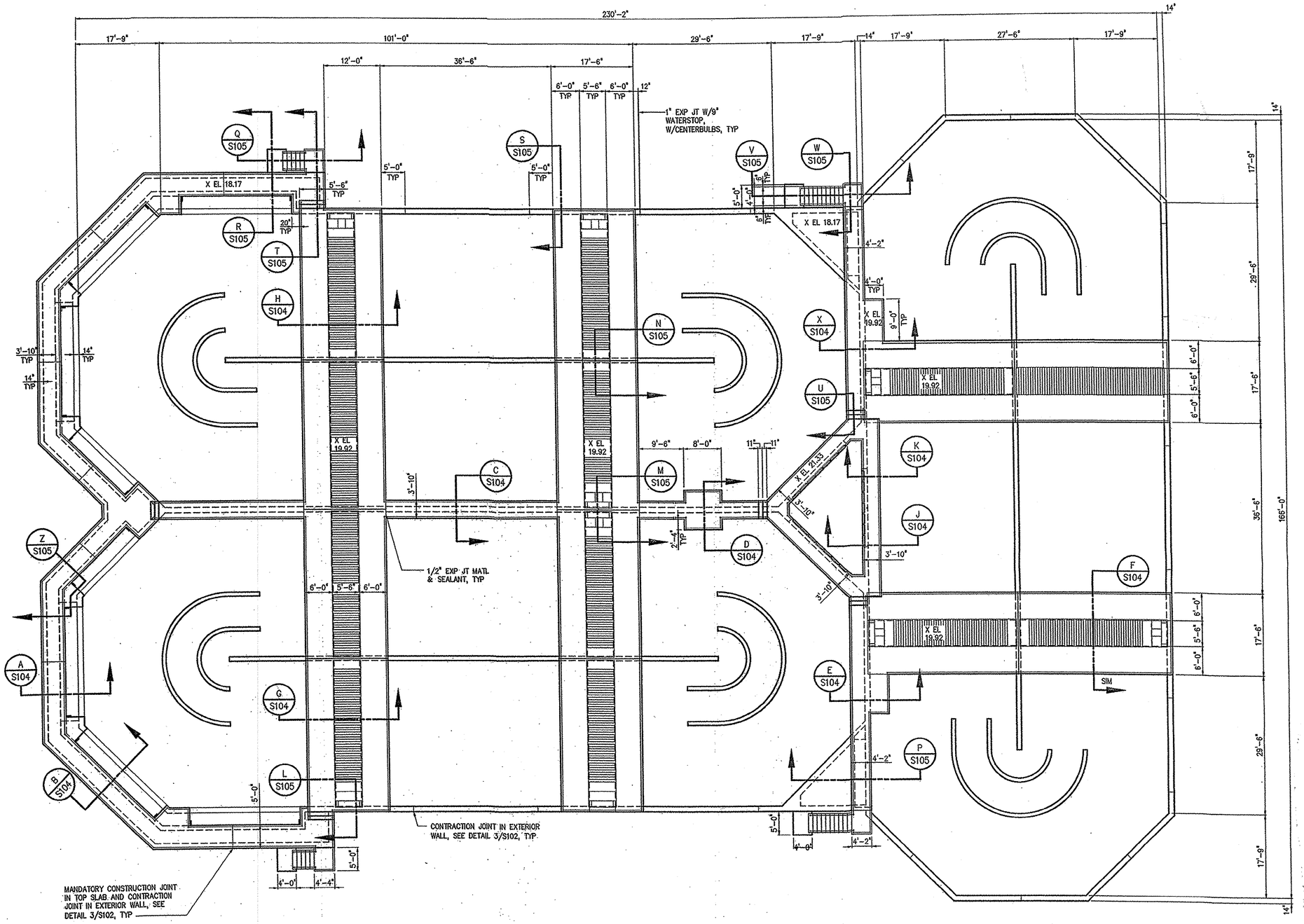

TOP PLAN

3/32"=1'-0"

NO.	ISSUED FOR	DATE	BY
3	DIMENSIONS REVISED	4-19-02	
2	CONSTRUCTION	11-16-01	
1	REGULATORY APPROVAL	8-31-01	

DESIGNED CTP
DRAWN ASC
CHECKED
PROJ. ENGR. JBM
APPROVED

SOUTH CAROLINA REGISTERED PROFESSIONAL ENGINEER No.16512 RONALD L. TAYLOR

SOUTH CAROLINA REGISTERED PROFESSIONAL ENGINEER No.20774 CHRISTOPHER T. PHILLIPS

HAZEN AND SAWYER
Environmental Engineers & Scientists
4011 WestChase Blvd, Raleigh, North Carolina 27607

GRAND STRAND WATER AND SEWER AUTHORITY
SOUTH CAROLINA

CONWAY WWTP
4.0 MGD EXPANSION AND UPGRADE

4 MGD TRIPLE DITCH AERATION BASIN
STRUCTURAL
TOP PLAN

THE SCALE BAR SHOWN BELOW MEASURES ONE INCH LONG ON THE ORIGINAL DRAWING.

DATE AUGUST 2001
H & S JOB NUMBER 30631
CONTRACT NUMBER 1
DRAWING NUMBER S103
H&S FLAT FILE NO. 56

04/22/02 12:16pm FILE= H:\30631\STRU\S103 by ECPLANTER XREFs=100\DT-PT, MISC\30631-TB,

35-004-032

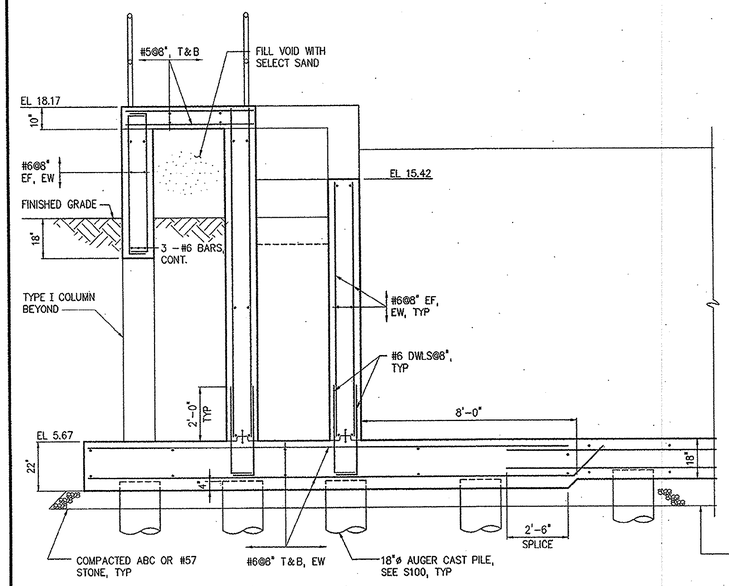

SECTION A S101
3/8"=1'-0"

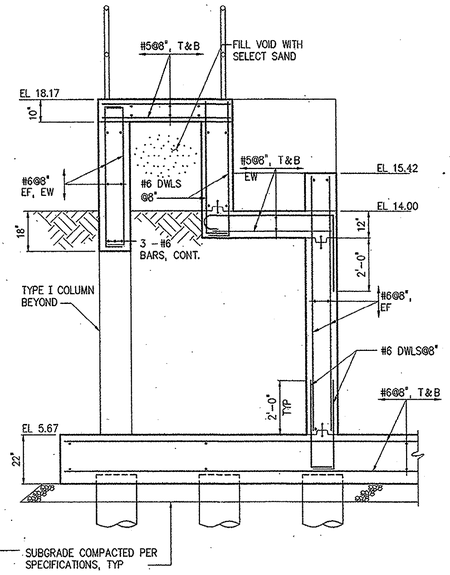

SECTION B S101
3/8"=1'-0"

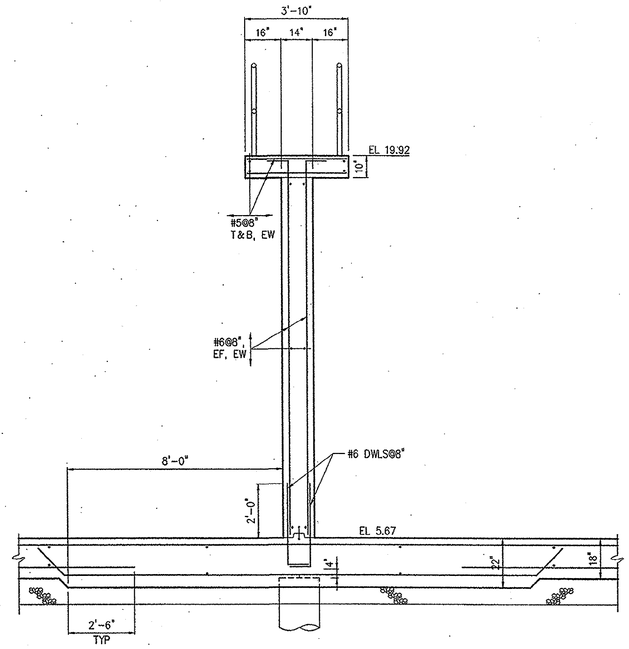

SECTION C S101
3/8"=1'-0"

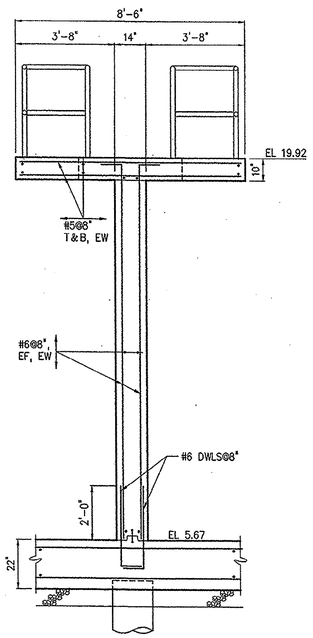

SECTION D S101
3/8"=1'-0"

NOTES:

1. PRECAST PRESTRESSED SOLID SLABS SHALL BE DESIGNED BY PRECAST SLAB MANUFACTURER AS PER SPECIFICATION SECTION 03415.
2. FOR TYPICAL SUBGRADE PREPARATION, SEE SECTION A/S104.
3. VERTICAL REINFORCEMENT IN WALL SHALL NOT BE INTERRUPTED THROUGH BLOCKOUT FOR SEAT.

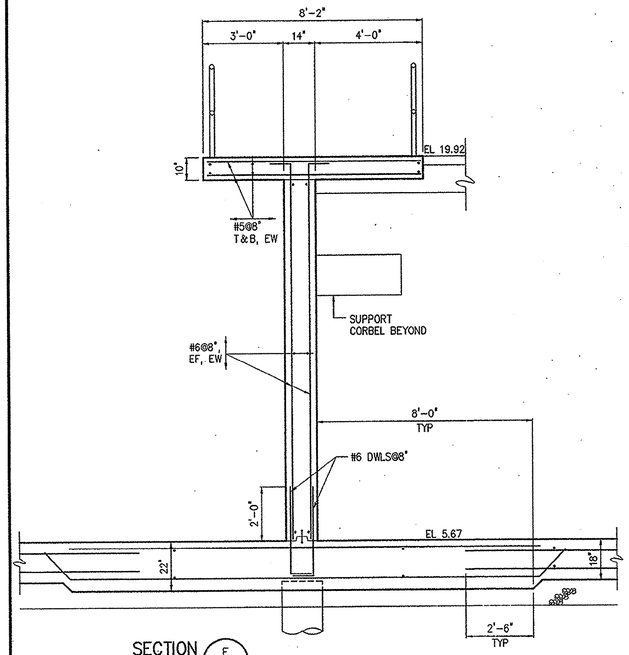

SECTION E S101
3/8"=1'-0"

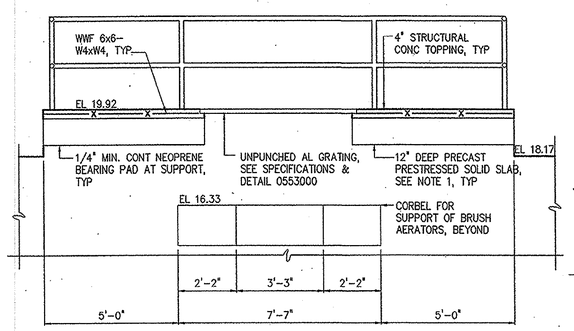

SECTION F S102 G S102
3/8"=1'-0"
SIMILAR

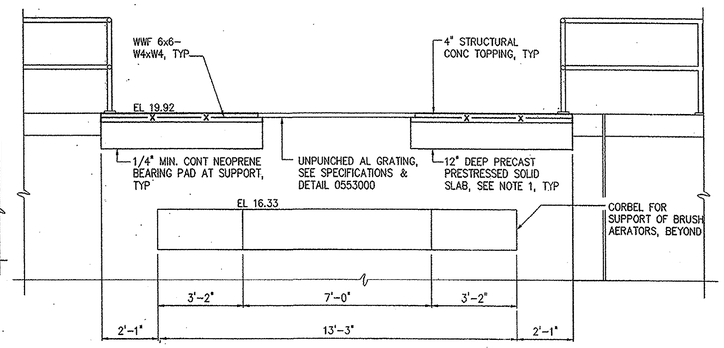

SECTION H S102
3/8"=1'-0"

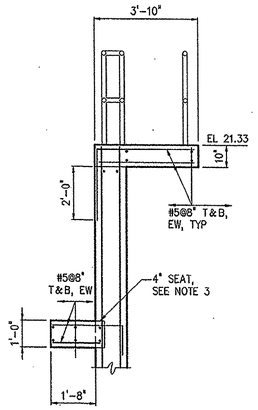

SECTION J S102
3/8"=1'-0"

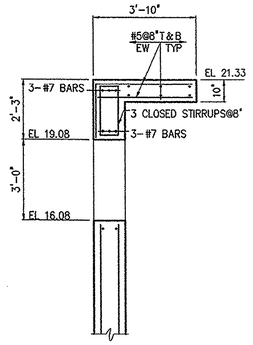

SECTION K S102
3/8"=1'-0"

NO.	ISSUED FOR	DATE	BY
2	CONSTRUCTION	11/16/01	JBM
1	REGULATORY APPROVAL	8-31-01	JBM

DESIGNED CTP
DRAWN ASC
CHECKED CTP
PROJ. ENGR. JBM
APPROVED

SOUTH CAROLINA REGISTERED PROFESSIONAL ENGINEER No. 18812 RONALD L. TAYLOR 11/16/01

SOUTH CAROLINA REGISTERED PROFESSIONAL ENGINEER CHRISTOPHER T. PHILLIPS 11/19/01

HAZEN AND SAWYER
Environmental Engineers & Scientists
4011 WestChase Blvd, Raleigh, North Carolina 27607

GRAND STRAND WATER AND SEWER AUTHORITY
SOUTH CAROLINA

CONWAY WWTP
4.0 MGD EXPANSION AND UPGRADE

4 MGD TRIPLE DITCH AERATION BASIN
STRUCTURAL
SECTIONS

THE SCALE BAR SHOWN BELOW MEASURES ONE INCH LONG ON THE ORIGINAL DRAWING.

DATE AUGUST 2001
H & S JOB NUMBER 30631
CONTRACT NUMBER 1
DRAWING NUMBER S104
H&S FLAT FILE NO. 56

11/14/01 2:37pm FILE: H:\30631\STRU\S104 by ASCORBIN XREF: 100\DT-S04-S, 100\DT-S11, 100\DT-S26, 100\DT-S01-S, 100\DT-S09-S, 100\DT-S14, 100\DT-S19, 100\DT-S03-S, MISC\30631-TB,

35-004-033

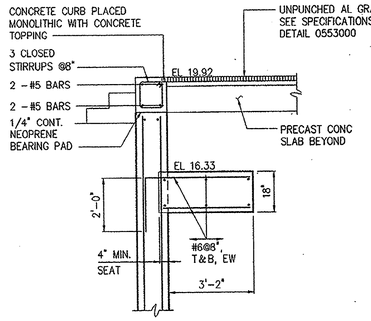

SECTION L / S102
3/8"=1'-0"

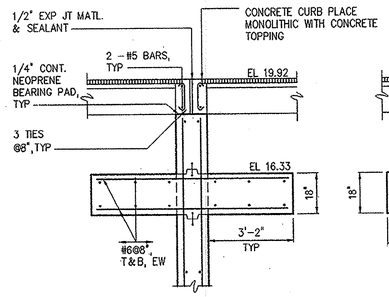

SECTION M / S102
3/8"=1'-0"

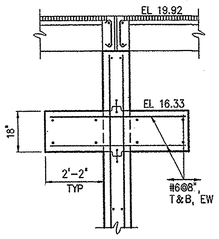

SECTION N / S102
3/8"=1'-0"

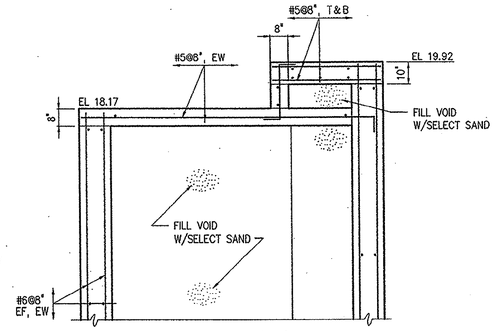

SECTION P / S103
3/8"=1'-0"

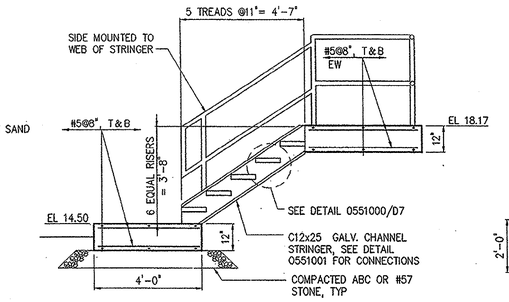

SECTION Q / S103
3/8"=1'-0"

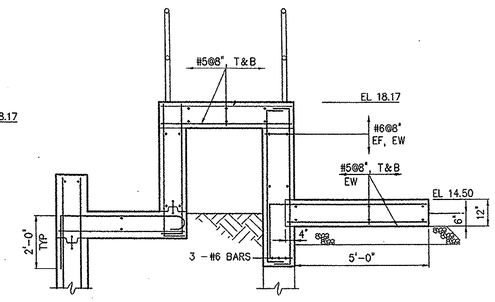

SECTION R / S103
3/8"=1'-0"

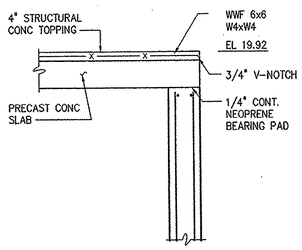

SECTION S / S103
3/8"=1'-0"

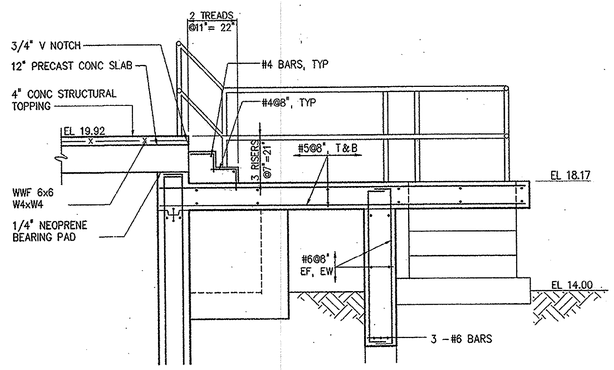

SECTION T / S103
3/8"=1'-0"

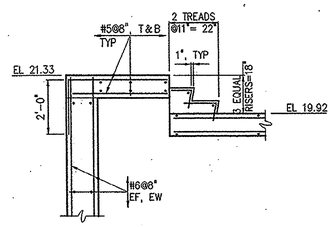

SECTION U / S103
3/8"=1'-0"

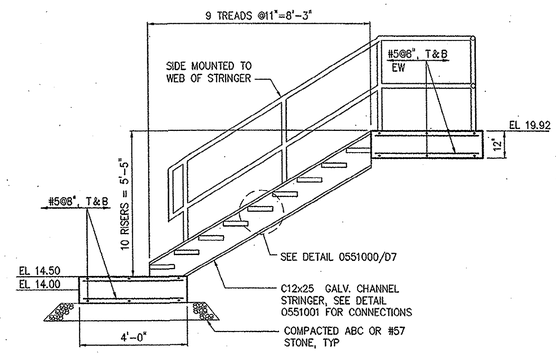

SECTION V / S103
3/8"=1'-0"

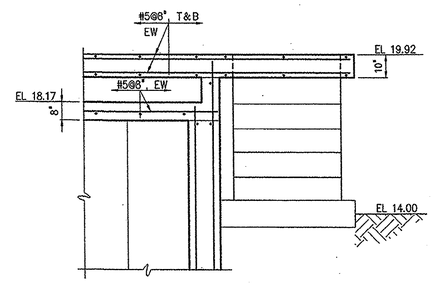

SECTION W / S103
3/8"=1'-0"

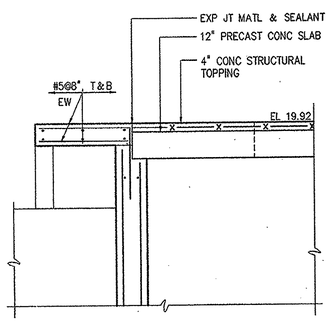

SECTION Y / S103
3/8"=1'-0"

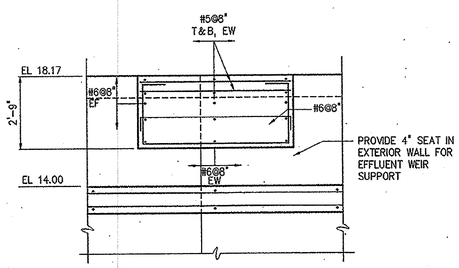

SECTION Z / S103
3/8"=1'-0"

NO.	ISSUED FOR	DATE	BY
2	CONSTRUCTION	11/16/01	JBM
1	REGULATORY APPROVAL	8-31-01	JBM

DESIGNED CTP
DRAWN ASC
CHECKED CTP
PROJ. ENGR. JBM
APPROVED

SOUTH CAROLINA PROFESSIONAL ENGINEER RONALD L. TAYLOR 11/16/01

SOUTH CAROLINA PROFESSIONAL ENGINEER CHRISTOPHER T. PHILLIPS 11/19/01

HAZEN AND SAWYER
Environmental Engineers & Scientists
4011 WestChase Blvd, Raleigh, North Carolina 27607

GRAND STRAND WATER AND SEWER AUTHORITY
SOUTH CAROLINA

CONWAY WWTP
4.0 MGD EXPANSION AND UPGRADE

4 MGD TRIPLE DITCH AERATION BASIN
STRUCTURAL
SECTIONS

THE SCALE BAR SHOWN BELOW MEASURES ONE INCH LONG ON THE ORIGINAL DRAWING.

DATE AUGUST 2001
H & S JOB NUMBER 30631
CONTRACT NUMBER 1
DRAWING NUMBER S105
H&S FLAT FILE NO. 56

11/14/01 2:40pm FILE= H:\30631\STRU\S105 by ASCORBIN XREFs=100\DT-S25, 100\DT-S26, 100\DT-S27, 100\DT-S21, 100\DT-S08-S, 100\DT-S17, 100\DT-S16, 100\DT-S22, 100\DT-S07-S, 100\DT-S15, 100\DT-S18, 100\DT-S05-S, 100\DT-S23, MISC\30631-TB,

33-004-034

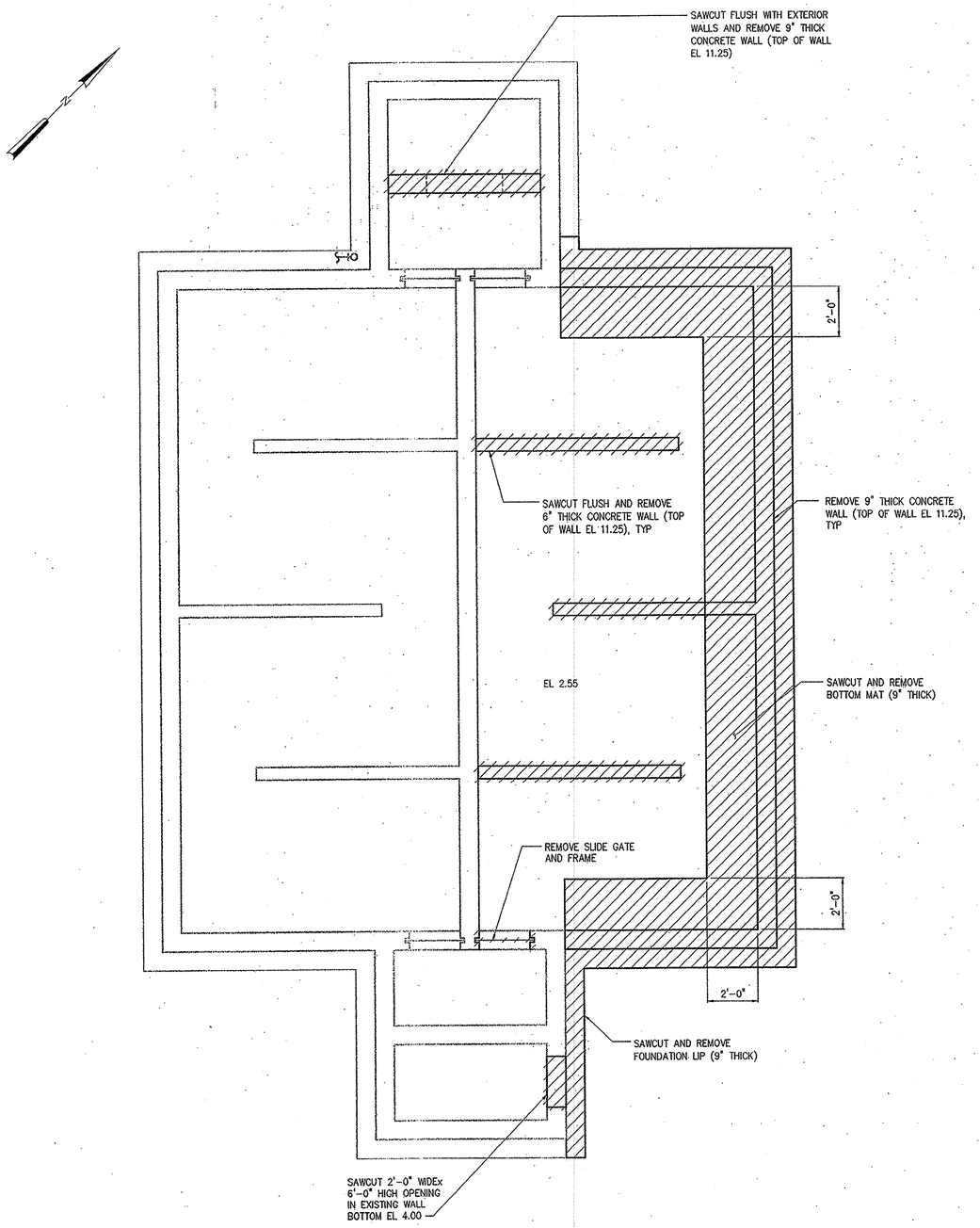

DEMOLITION – BOTTOM PLAN

3/8"= 1'-0"

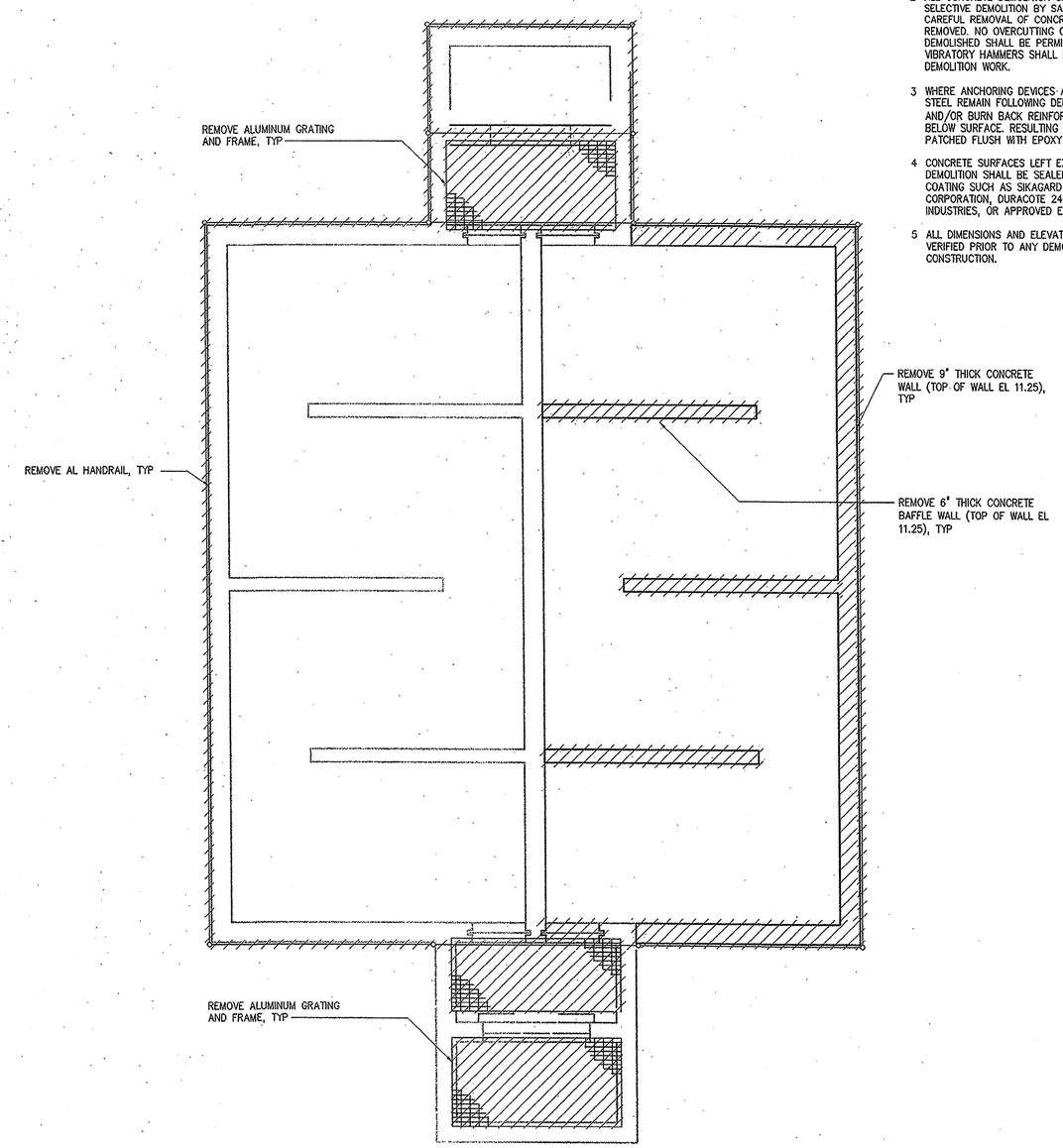

DEMOLITION – TOP PLAN

3/8"= 1'-0"

NOTES:

1. FOR DEMOLITION SEQUENCING REFER TO SPECIFICATION SECTION 01520, MAINTENANCE OF PLANT OPERATIONS DURING CONSTRUCTION.
2. ALL CONCRETE DEMOLITION SHOWN SHALL BE SELECTIVE DEMOLITION BY SAWCUTTING AND CAREFUL REMOVAL OF CONCRETE SHOWN TO BE REMOVED. NO OVERCUTTING OF AREAS TO BE DEMOLISHED SHALL BE PERMITTED. EXPLOSIVES AND VIBRATORY HAMMERS SHALL NOT BE USED FOR DEMOLITION WORK.
3. WHERE ANCHORING DEVICES AND/OR REINFORCING STEEL REMAIN FOLLOWING DEMOLITION, REMOVE AND/OR BURN BACK REINFORCING STEEL 1/2" MIN. BELOW SURFACE. RESULTING VOID SHALL BE PATCHED FLUSH WITH EPOXY RESIN BINDER.
4. CONCRETE SURFACES LEFT EXPOSED FOLLOWING DEMOLITION SHALL BE SEALED WITH EPOXY RESIN COATING SUCH AS SIKAGARD 62 BY SIKA CORPORATION, DURACOTE 240 BY TAMMS INDUSTRIES, OR APPROVED EQUAL.
5. ALL DIMENSIONS AND ELEVATIONS SHALL BE FIELD VERIFIED PRIOR TO ANY DEMOLITION OR CONSTRUCTION.

NO.	ISSUED FOR	DATE	BY
2	CONSTRUCTION	11/16/01	JBM
1	REGULATORY APPROVAL	8-31-01	JBM

DESIGNED CTP
DRAWN ASC
CHECKED CTP
PROJ. ENGR. JBM
APPROVED RLT

SOUTH CAROLINA REGISTERED PROFESSIONAL ENGINEER No. 18512 RONALD L. TAYLOR 11/19/01

SOUTH CAROLINA REGISTERED PROFESSIONAL ENGINEER CHRISTOPHER T. PHILLIPS 11/19/01

HAZEN AND SAWYER
Environmental Engineers & Scientists
4011 WestChase Blvd, Raleigh, North Carolina 27607

GRAND STRAND WATER AND SEWER AUTHORITY
SOUTH CAROLINA

CONWAY WWTP
4.0 MGD EXPANSION AND UPGRADE

UV DISINFECTION TANK
STRUCTURAL
DEMOLITION PLANS

THE SCALE BAR SHOWN BELOW MEASURES ONE INCH LONG ON THE ORIGINAL DRAWING.

DATE AUGUST 2001
H & S JOB NUMBER 30631
CONTRACT NUMBER 1
DRAWING NUMBER S200
H&S FLAT FILE NO. 56

08/13/01 5:10pm FILE= H:\30631\MECH\M200 by EWNG XREFs=200\CC-PB, 200\CC-PT, MISC\30631-TB, 200\CC-S03,

35-004-035

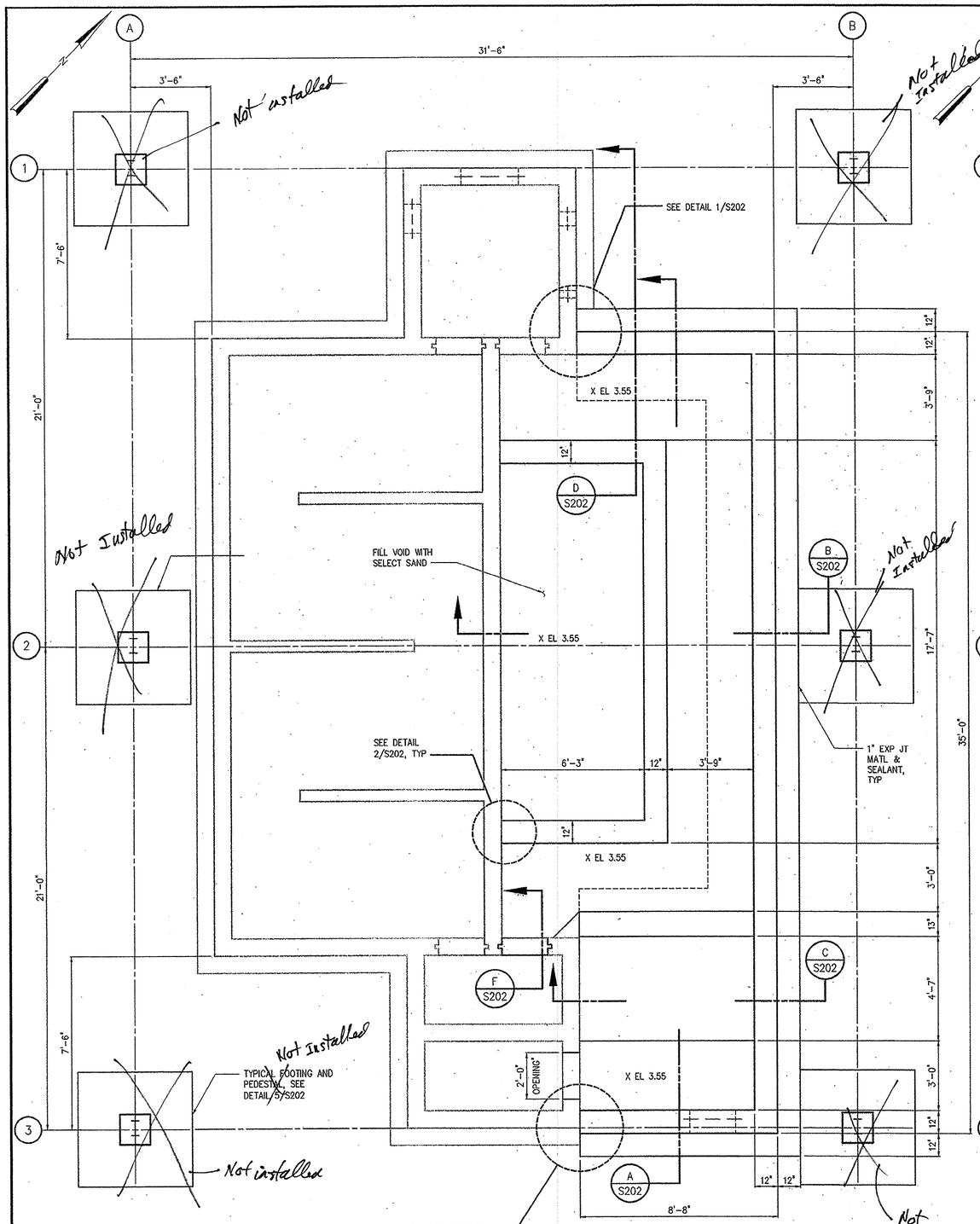

BOTTOM PLAN

3/8"= 1'-0"

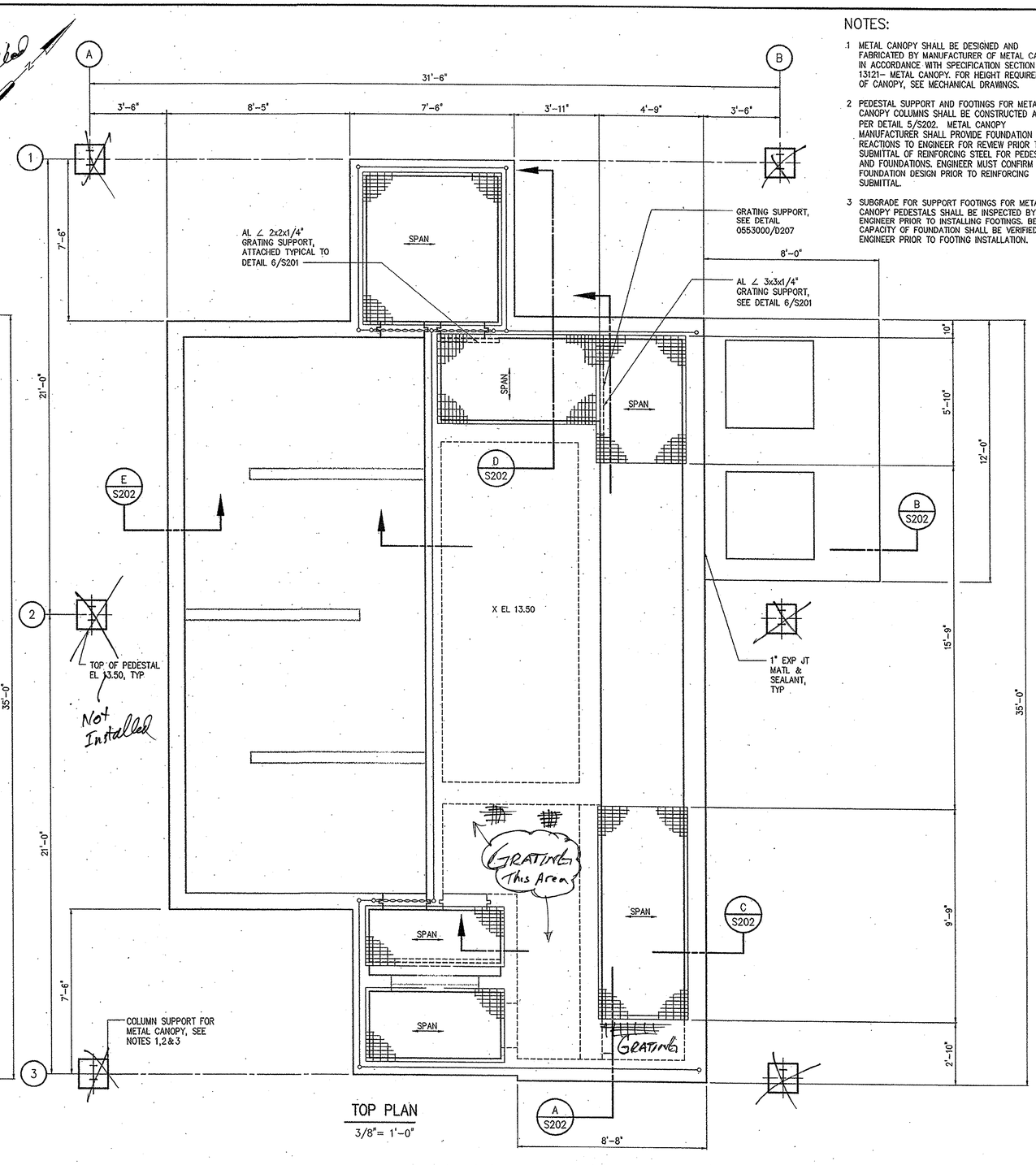

TOP PLAN

3/8"= 1'-0"

NOTES:

1 METAL CANOPY SHALL BE DESIGNED AND FABRICATED BY MANUFACTURER OF METAL CANOPY IN ACCORDANCE WITH SPECIFICATION SECTION 13121– METAL CANOPY. FOR HEIGHT REQUIREMENTS OF CANOPY, SEE MECHANICAL DRAWINGS.

2 PEDESTAL SUPPORT AND FOOTINGS FOR METAL CANOPY COLUMNS SHALL BE CONSTRUCTED AS PER DETAIL 5/S202. METAL CANOPY MANUFACTURER SHALL PROVIDE FOUNDATION REACTIONS TO ENGINEER FOR REVIEW PRIOR TO SUBMITTAL OF REINFORCING STEEL FOR PEDESTALS AND FOUNDATIONS. ENGINEER MUST CONFIRM FOUNDATION DESIGN PRIOR TO REINFORCING SUBMITTAL.

3 SUBGRADE FOR SUPPORT FOOTINGS FOR METAL CANOPY PEDESTALS SHALL BE INSPECTED BY ENGINEER PRIOR TO INSTALLING FOOTINGS. BEARING CAPACITY OF FOUNDATION SHALL BE VERIFIED BY ENGINEER PRIOR TO FOOTING INSTALLATION.

NO.	ISSUED FOR	DATE	BY
2	CONSTRUCTION	11/16/01	JBM
1	REGULATORY APPROVAL	8-31-01	JBM

DESIGNED CTP
DRAWN ASC
CHECKED CTP
PROJ. ENGR. JBM
APPROVED

SOUTH CAROLINA REGISTERED PROFESSIONAL ENGINEER No. 16512 RONALD L. TAYLOR 11/16/01

SOUTH CAROLINA REGISTERED PROFESSIONAL ENGINEER CHRISTOPHER T. PHILLIPS 11/19/01

HAZEN AND SAWYER
Environmental Engineers & Scientists
4011 WestChase Blvd, Raleigh, North Carolina 27607

GRAND STRAND WATER AND SEWER AUTHORITY
SOUTH CAROLINA

CONWAY WWTP
4.0 MGD EXPANSION AND UPGRADE

UV DISINFECTION TANK
STRUCTURAL
TOP PLAN AND BOTTOM PLAN

THE SCALE BAR SHOWN BELOW MEASURES ONE INCH LONG ON THE ORIGINAL DRAWING.

DATE AUGUST 2001
H & S JOB NUMBER 30631
CONTRACT NUMBER 1
DRAWING NUMBER S201
H&S FLAT FILE NO. 56

2001

35-004-031

NOTES:

1 #7 BARS IN BEAM SHALL EXTEND 10" MIN. INTO WALL AT EACH END AND TERMINATE WITH A STANDARD 90° HOOK.

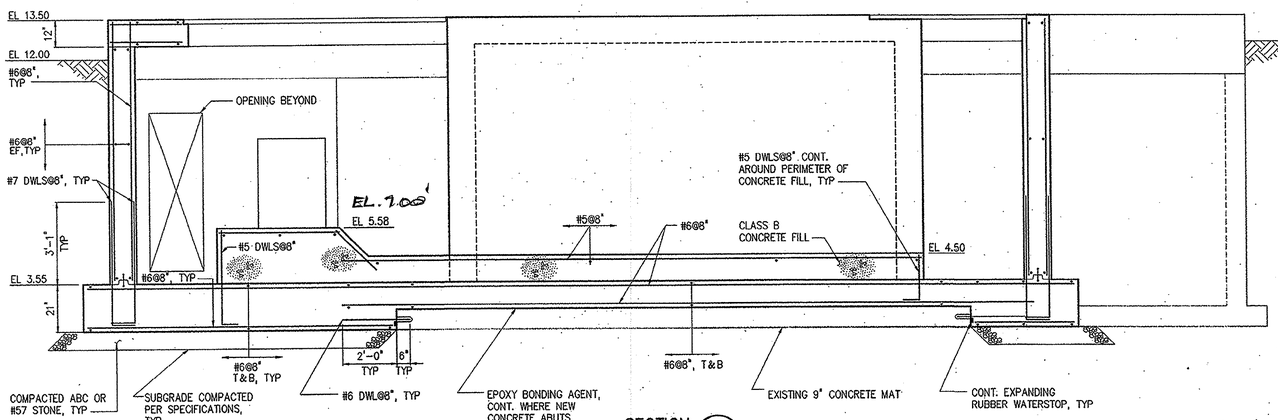

SECTION A S201
3/8"=1'-0"

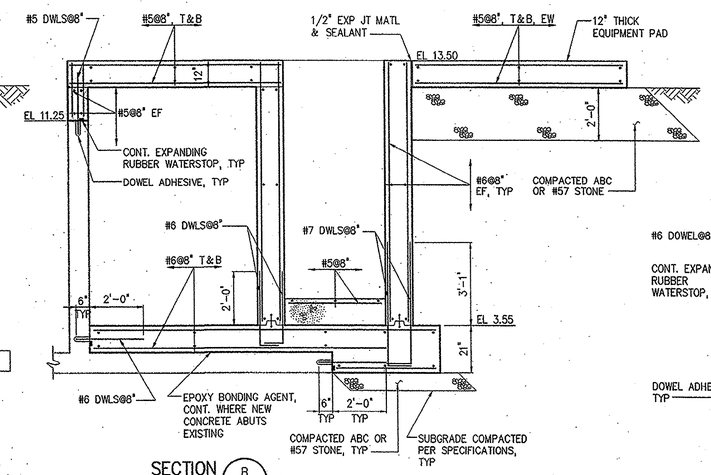

SECTION B S201
3/8"=1'-0"

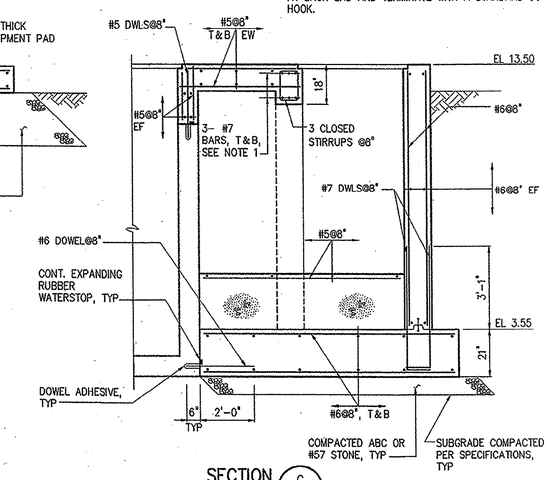

SECTION C S201
3/8"=1'-0"

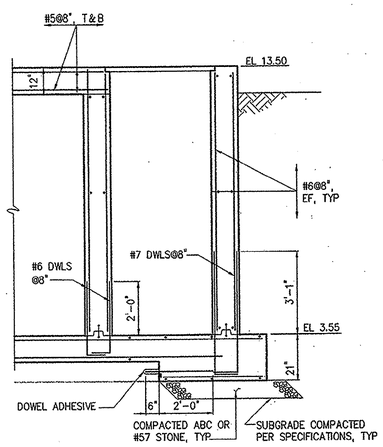

SECTION D S201
3/8"=1'-0"

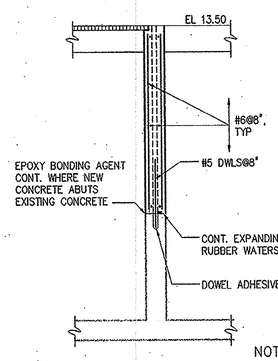

SECTION F S201
3/8"=1'-0"

NOTE: #5 DOWELS AND EXPANDING RUBBER WATERSTOPS SHALL BE CONTINUOUS ACROSS BOTTOM AND UP BOTH SIDES OF OPENING.

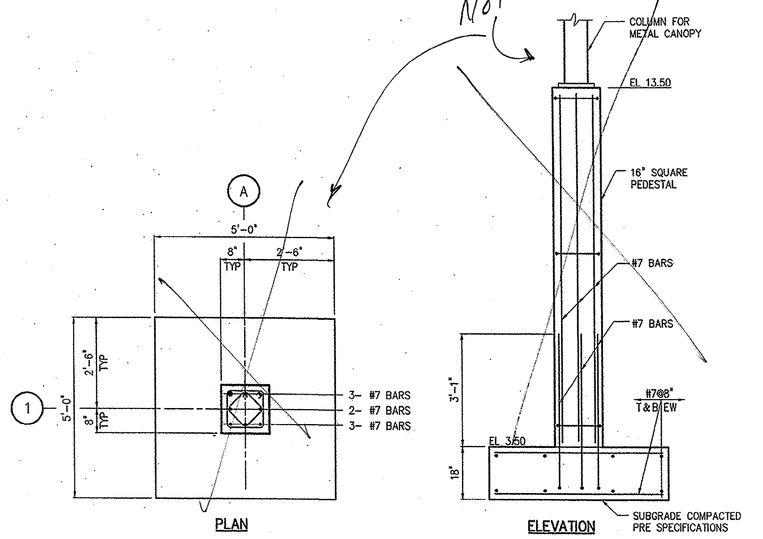

TYPICAL CANOPY SUPPORT PEDESTAL & FOOTING

DETAIL 5
1/2"=1'-0" S201

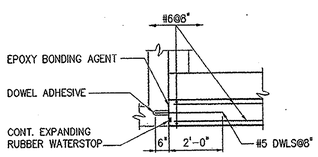

DETAIL 1
3/8"=1'-0" S201

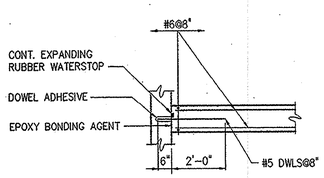

DETAIL 2
3/8"=1'-0" S201

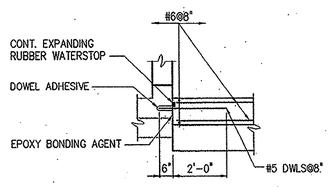

DETAIL 3
3/8"=1'-0" S201

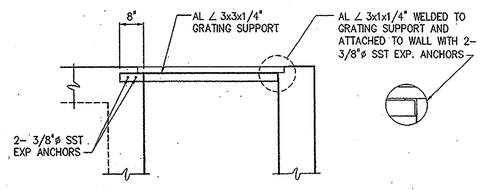

DETAIL 6
1/2"=1'-0" S201

NO.	ISSUED FOR	DATE	BY
2	CONSTRUCTION	11/16/01	JBM
1	REGULATORY APPROVAL	8-31-01	JBM

DESIGNED CTP
DRAWN ASC
CHECKED CTP
PROJ. ENGR. JBM
APPROVED

SOUTH CAROLINA PROFESSIONAL ENGINEER REGISTERED No. 16512 RONALD L. TAYLOR 11/16/01

SOUTH CAROLINA REGISTERED PROFESSIONAL ENGINEER CHRISTOPHER T. PHILLIPS 11/19/01

HAZEN AND SAWYER
Environmental Engineers & Scientists
4011 WestChase Blvd, Raleigh, North Carolina 27607

GRAND STRAND WATER AND SEWER AUTHORITY
SOUTH CAROLINA

CONWAY WWTP
4.0 MGD EXPANSION AND UPGRADE

UV DISINFECTION TANK
STRUCTURAL
SECTIONS AND DETAILS

THE SCALE BAR SHOWN BELOW MEASURES ONE INCH LONG ON THE ORIGINAL DRAWING.

DATE AUGUST 2001
H & S JOB NUMBER 30631
CONTRACT NUMBER 1
DRAWING NUMBER S202
H&S FLAT FILE NO. 56

08/14/01 8:58am FILE= H:\30631\MECH\M202 by EWHC XREFs=200\CC-S02, MISC\30631-TB, 200\CC-S03,

35-004-037

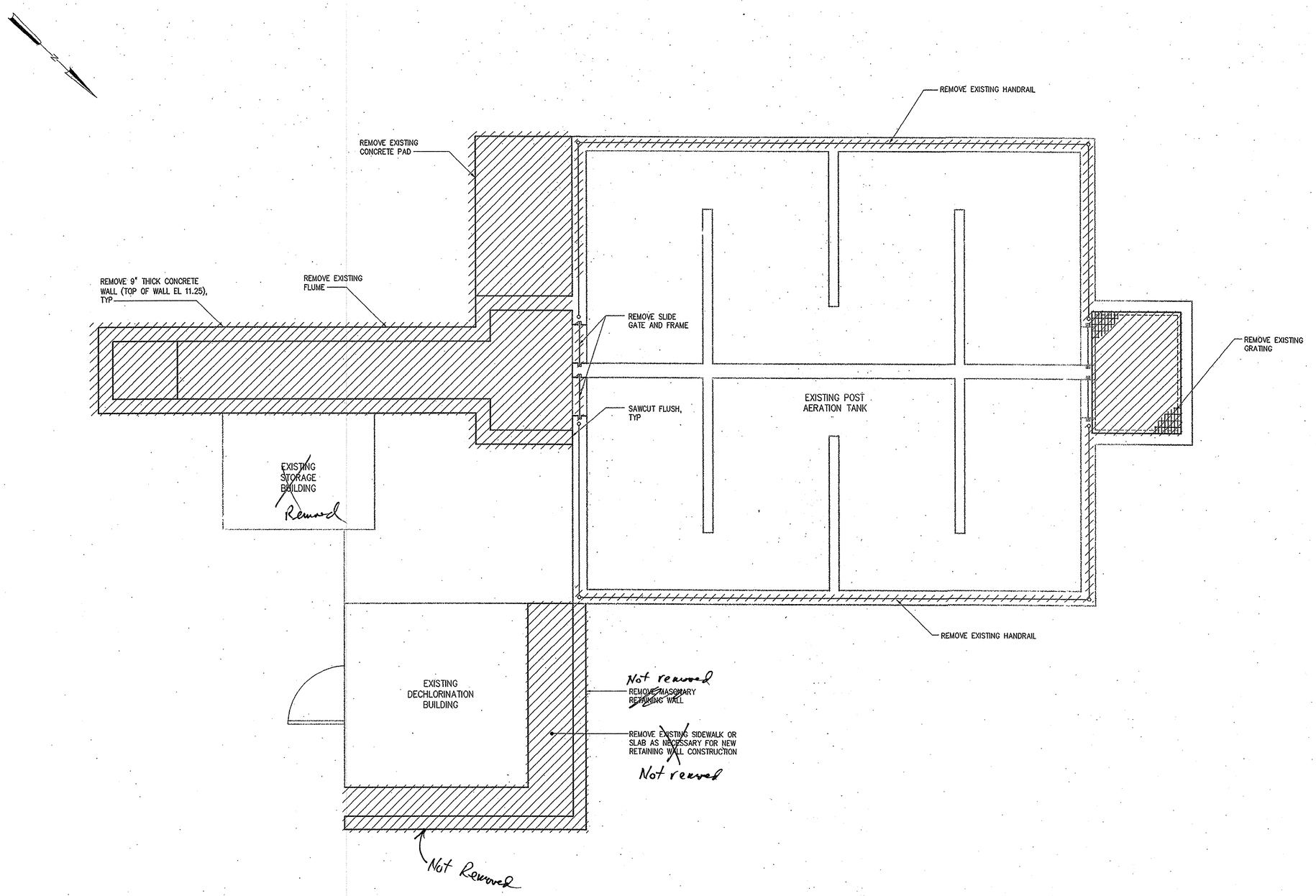

DEMOLITION PLAN

3/8" = 1'-0"

NOTES:

1. FOR DEMOLITION SEQUENCING REFER TO SPECIFICATION SECTION 01520, MAINTENANCE OF PLANT OPERATIONS DURING CONSTRUCTION.
2. ALL CONCRETE DEMOLITION SHOWN SHALL BE SELECTIVE DEMOLITION BY SAWCUTTING AND CAREFUL REMOVAL OF CONCRETE SHOWN TO BE REMOVED. NO OVERCUTTING OF AREAS TO BE DEMOLISHED SHALL BE PERMITTED. EXPLOSIVES AND VIBRATORY HAMMERS SHALL NOT BE USED FOR DEMOLITION WORK.
3. WHERE ANCHORING DEVICES AND/OR REINFORCING STEEL REMAIN FOLLOWING DEMOLITION, REMOVE AND/OR BURN BACK REINFORCING STEEL 1/2" MIN. BELOW SURFACE. RESULTING VOID SHALL BE PATCHED FLUSH WITH EPOXY RESIN BINDER.
4. CONCRETE SURFACES LEFT EXPOSED FOLLOWING DEMOLITION SHALL BE SEALED WITH EPOXY RESIN COATING SUCH AS SIKAGARD 62 BY SIKA CORPORATION, DURACOTE 240 BY TAMMS INDUSTRIES, OR APPROVED EQUAL.
5. ALL DIMENSIONS AND ELEVATIONS SHALL BE FIELD VERIFIED PRIOR TO ANY DEMOLITION OR CONSTRUCTION.

NO.	ISSUED FOR	DATE	BY
2	CONSTRUCTION	11/16/01	JBM
1	REGULATORY APPROVAL	8-31-01	JBM

DESIGNED CTP
DRAWN ASC
CHECKED CTP
PROJ. ENGR. JBM
APPROVED

SOUTH CAROLINA REGISTERED PROFESSIONAL ENGINEER No. 16012 RONALD L. TAYLOR 11/16/01

SOUTH CAROLINA REGISTERED PROFESSIONAL ENGINEER CHRISTOPHER T. PHILLIPS 11/19/01

HAZEN AND SAWYER
Environmental Engineers & Scientists
4011 WestChase Blvd, Raleigh, North Carolina 27607

GRAND STRAND WATER AND SEWER AUTHORITY
SOUTH CAROLINA

CONWAY WWTP
4.0 MGD EXPANSION AND UPGRADE

POST AERATION TANK MODIFICATIONS
STRUCTURAL
DEMOLITION PLAN

THE SCALE BAR SHOWN BELOW MEASURES ONE INCH LONG ON THE ORIGINAL DRAWING.

DATE AUGUST 2001
H & S JOB NUMBER 30631
CONTRACT NUMBER 1
DRAWING NUMBER S300
H&S FLAT FILE NO. 56

11/16/01 11:44am FILE= H:\30631\STRU\S300 by ECPLANTER XREFs=MISC\30631-TB, 300\DC-PT,

35-004-038

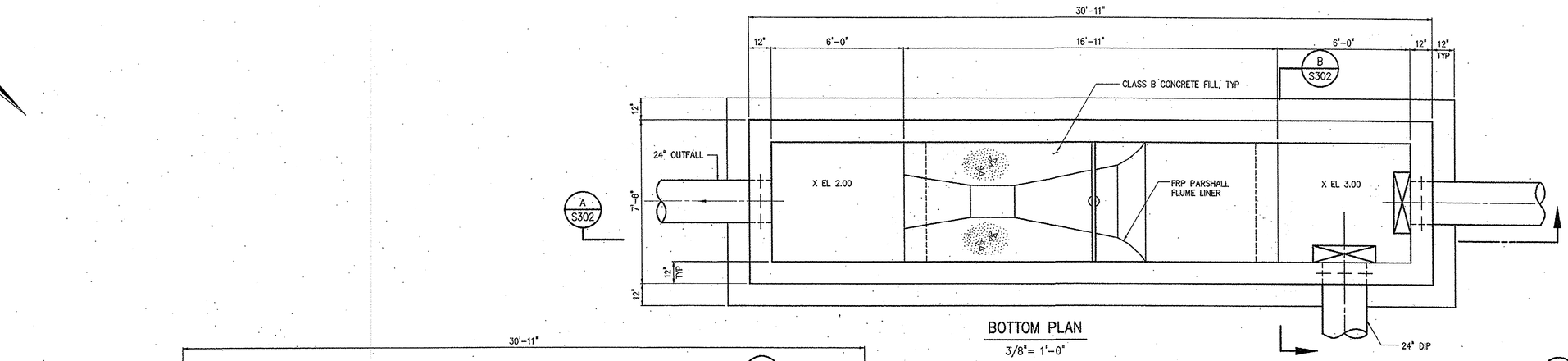

BOTTOM PLAN

3/8" = 1'-0"

NOTES:

1 ALL BACKFILL REQUIRED FOR CONSTRUCTION OF SLAB FOR BLOWERS SHALL BE COMPACTED #57 STONE.

2 EXCAVATION RETAINAGE SYSTEM TO PROTECT DECHLORINATION BUILDING, IF REQUIRED SHALL BE DESIGNED BY CONTRACTOR. CONTRACTOR SHALL SUBMIT PROPOSED SYSTEM COMPLETE WITH CONSTRUCTION DRAWINGS AND STRUCTURAL CALCULATIONS. DRAWINGS AND CALCULATIONS SHALL BE SEALED BY A CURRENTLY REGISTERED PROFESSIONAL ENGINEER IN THE STATE OF SOUTH CAROLINA. EXCAVATION RETAINAGE SYSTEM SHALL BE INSTALLED WITHOUT THE USE OF IMPACT OR VIBRATORY EQUIPMENT.

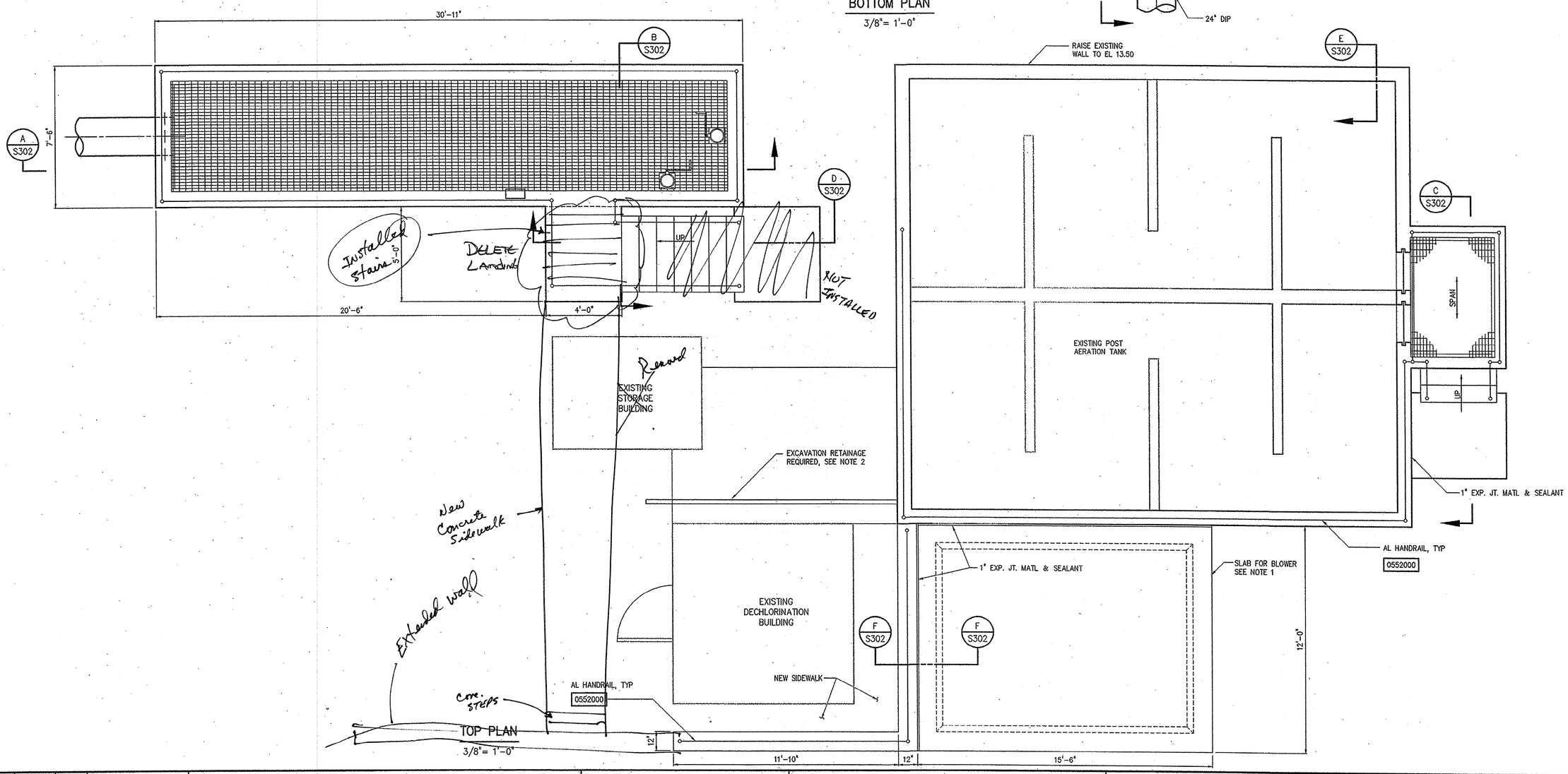

TOP PLAN

3/8" = 1'-0"

NO.	ISSUED FOR	DATE	BY
2	CONSTRUCTION	11/14/01	JBM
1	REGULATORY APPROVAL	8-31-01	JBM

DESIGNED CTP
DRAWN ASC
CHECKED CTP
PROJ. ENGR. JBM
APPROVED RLT

SOUTH CAROLINA REGISTERED PROFESSIONAL ENGINEER No. 16512 RONALD L. TAYLOR 11/14/01

SOUTH CAROLINA REGISTERED PROFESSIONAL ENGINEER No. 20014 CHRISTOPHER T. PHILLIPS 11/19/01

HAZEN AND SAWYER
Environmental Engineers & Scientists
4011 WestChase Blvd, Raleigh, North Carolina 27607

GRAND STRAND WATER AND SEWER AUTHORITY
SOUTH CAROLINA

CONWAY WWTP
4.0 MGD EXPANSION AND UPGRADE

POST AERATION TANK MODIFICATIONS
STRUCTURAL
TOP PLAN AND BOTTOM PLAN

THE SCALE BAR SHOWN BELOW MEASURES ONE INCH LONG ON THE ORIGINAL DRAWING.

DATE AUGUST 2001
H & S JOB NUMBER 30631
CONTRACT NUMBER 1
DRAWING NUMBER S301
H&S FLAT FILE NO. 56

08/22/01 4:16pm FILE= H:\30631\MECH\M301 by EWING XREFs=MISC\30631-TB, 300\DC-PB,

35-004-039

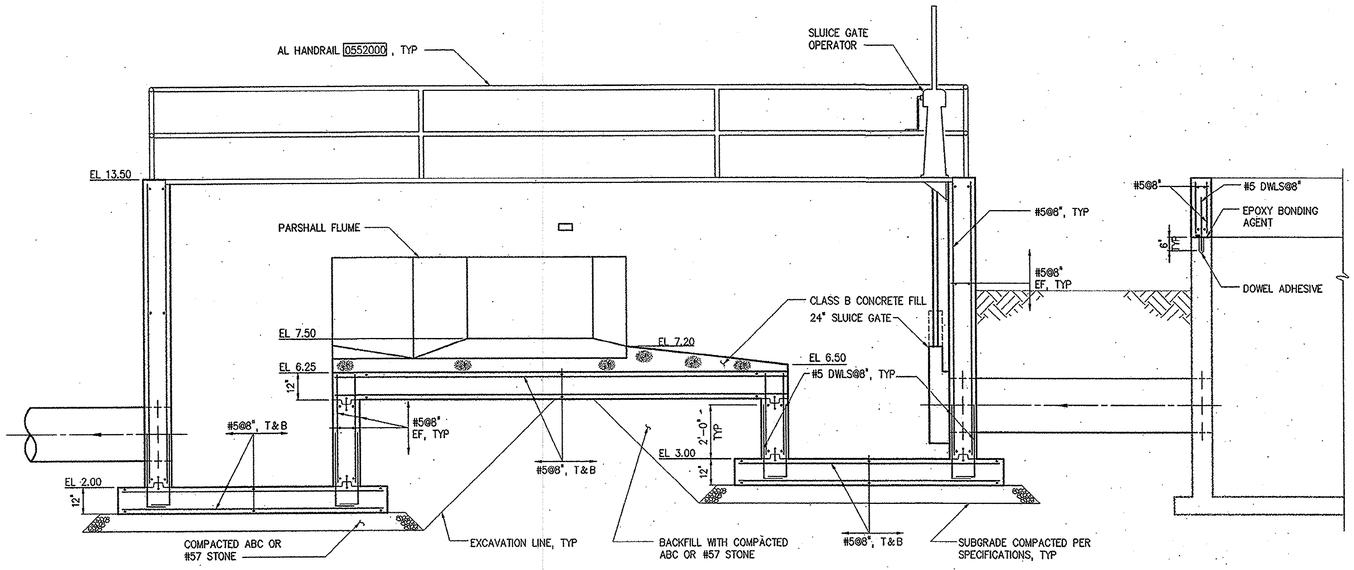

SECTION A S301
3/8"=1'-0"

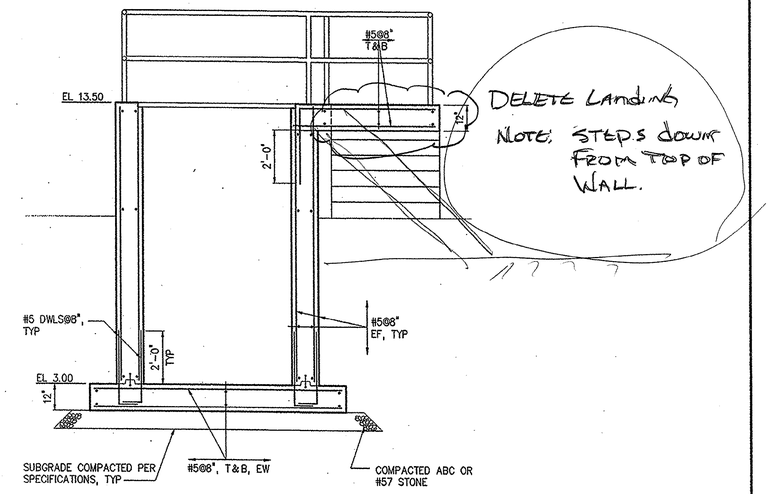

SECTION B S301
3/8"=1'-0"

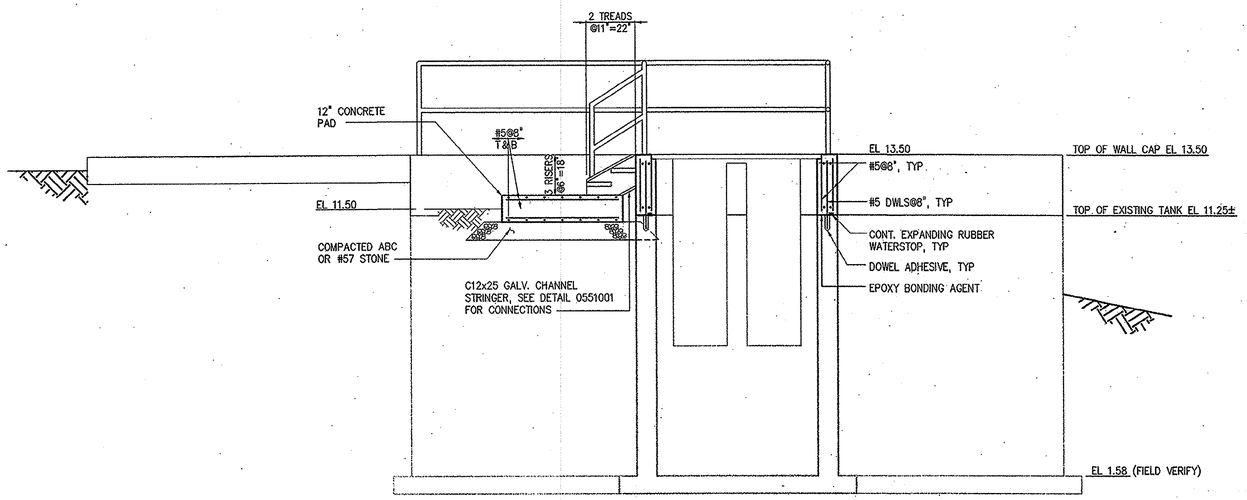

SECTION C S301
3/8"=1'-0"

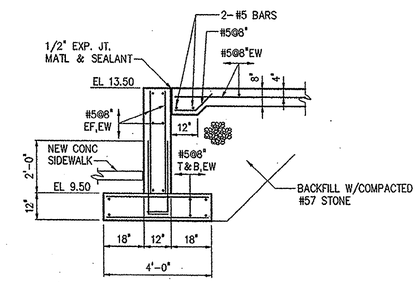

SECTION F S301
3/8"=1'-0"

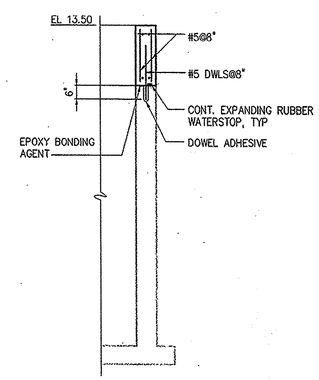

SECTION E S301
3/8"=1'-0"

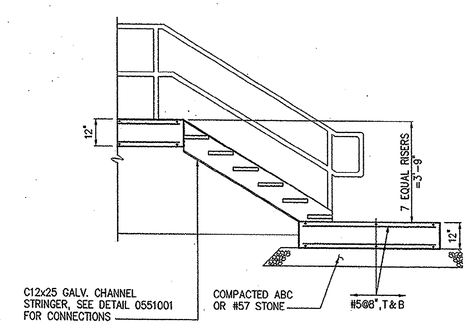

SECTION D S301
3/8"=1'-0"

NO.	ISSUED FOR	DATE	BY
2	CONSTRUCTION	11/16/01	JBM
1	REGULATORY APPROVAL	8-31-01	JBM

DESIGNED CTP
DRAWN ASC
CHECKED TLS
PROJ. ENGR. JBM
APPROVED RLT

SOUTH CAROLINA PROFESSIONAL ENGINEER REGISTERED No. 10512 RONALD L. TAYLOR 11/16/01

SOUTH CAROLINA PROFESSIONAL ENGINEER REGISTERED No. 20774 CHRISTOPHER T. PHILLIPS 11/9/01

HAZEN AND SAWYER
Environmental Engineers & Scientists
4011 WestChase Blvd, Raleigh, North Carolina 27607

GRAND STRAND WATER AND SEWER AUTHORITY
SOUTH CAROLINA

CONWAY WWTP
4.0 MGD EXPANSION AND UPGRADE

POST AERATION TANK MODIFICATIONS
STRUCTURAL
SECTIONS

THE SCALE BAR SHOWN BELOW MEASURES ONE INCH LONG ON THE ORIGINAL DRAWING.

DATE AUGUST 2001
H & S JOB NUMBER 30631
CONTRACT NUMBER 1
DRAWING NUMBER S302
H&S FLAT FILE NO. 56.

08/22/01 4:13pm FILE= H:\30631\MECH\M303 by EWNG XREFs=MISC\30631-TB, 300\DC-S01, 300\DC-S02, 300\DC-S03.

35-004-040

NOTES:

1. SEE 5/A401 FOR ATTIC ACCESS HATCH IN CEILING. COORDINATE LOCATION WITH STRU AND ELEC EQUIPMENT.
2. PROVIDE OPENING IN ACCORDANCE WITH AIR CONDITIONER MANUFACTURER'S OPENING REQUIREMENT.
3. ELECTRICAL BUILDING PLAN DIMENSIONS ARE TAKEN FROM OUTSIDE FACE OF MASONRY WALL.

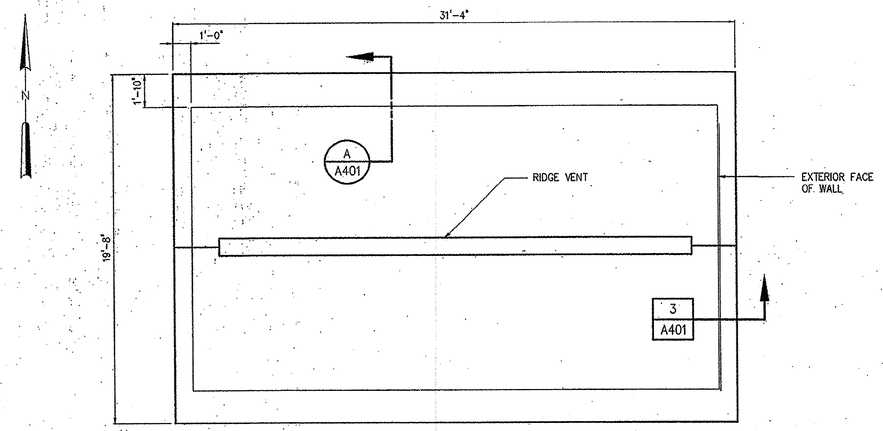

ROOF PLAN

1/4"=1'-0"

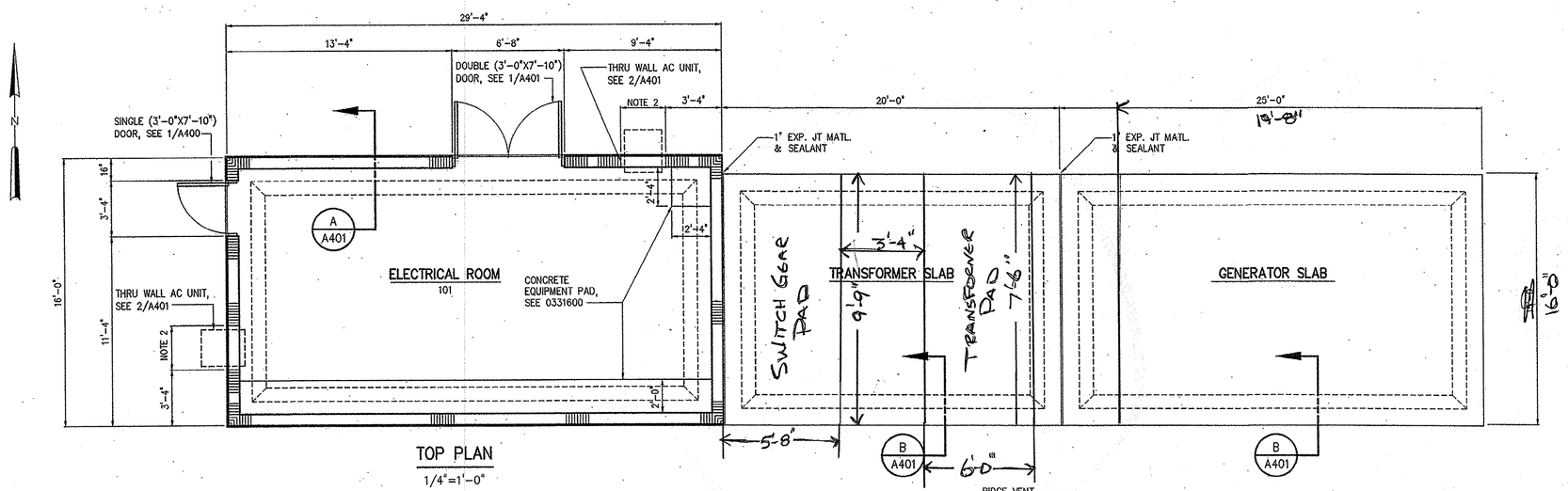

TOP PLAN

1/4"=1'-0"

SOUTH ELEVATION

1/4"=1'-0"

EAST ELEVATION

1/4"=1'-0"

NORTH ELEVATION

1/4"=1'-0"

WEST ELEVATION

1/4"=1'-0"

NO.	ISSUED FOR	DATE	BY
2	CONSTRUCTION	11/16/01	JBM
1	REGULATORY APPROVAL	8-31-01	JBM

DESIGNED WHR
DRAWN MMM
CHECKED JBM
PROJ. ENGR. JBM
APPROVED

SOUTH CAROLINA PROFESSIONAL ENGINEER No. 18512 RONALD L. TAYLOR 11/16/01

SOUTH CAROLINA REGISTERED PROFESSIONAL ENGINEER No. 10488 JOSEPH B. MEEKS 11/16/01

HAZEN AND SAWYER
Environmental Engineers & Scientists
4011 WestChase Blvd, Raleigh, North Carolina 27607

GRAND STRAND WATER AND SEWER AUTHORITY
SOUTH CAROLINA

CONWAY WWTP
4.0 MGD EXPANSION AND UPGRADE

NEW ELECTRICAL BUILDING
ARCHITECTURAL
PLAN AND ELEVATIONS

THE SCALE BAR SHOWN BELOW MEASURES ONE INCH LONG ON THE ORIGINAL DRAWING.

DATE AUGUST 2001
H & S JOB NUMBER 30631
CONTRACT NUMBER 1
DRAWING NUMBER A400
H&S FLAT FILE NO. 56

11/08/01 4:55pm FILE= H:\30631\ARCH\A400 by MMCINTOSH XREFs=MISC\30631-TB, 400\elec-pt, 400\elec-el-n, 400\elec-el-s, 400\elec-el-e, 400\elec-el-w, 400\elec-pr.

35-004-041

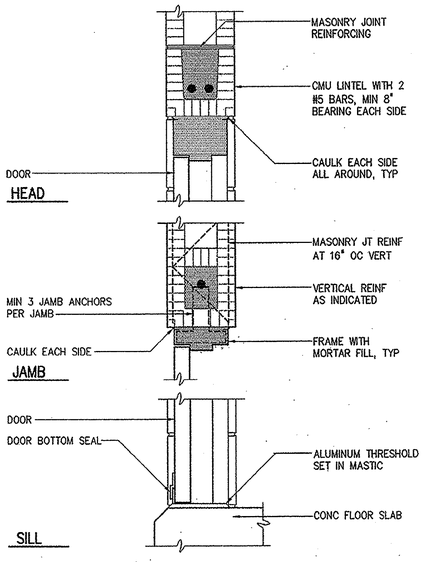

HEAD, JAMB, AND SILL
EXTERIOR DOOR IN MASONRY

DETAIL 1 / A400
1 1/2"=1'-0"

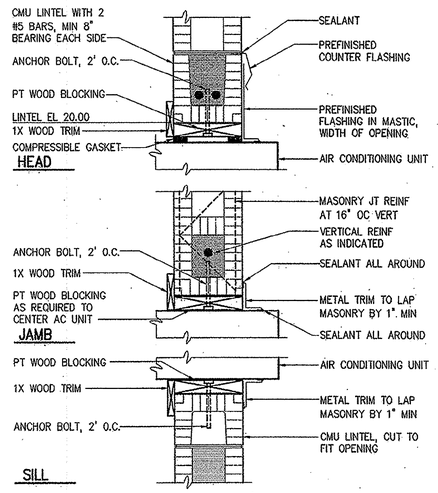

HEAD, JAMB, AND SILL
AIR CONDITIONING UNIT

DETAIL 2 / A400
1 1/2"=1'-0"

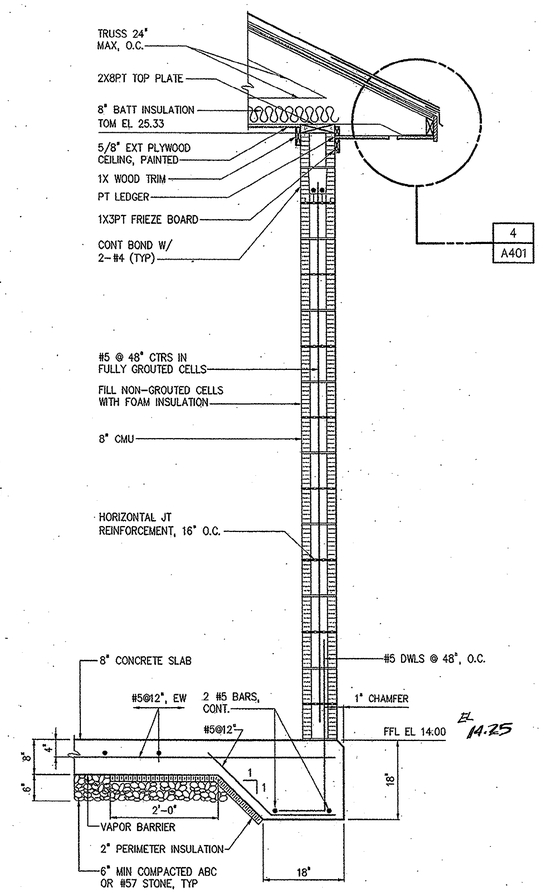

WALL AT EAVE

SECTION A / A400
3/4"=1'-0"

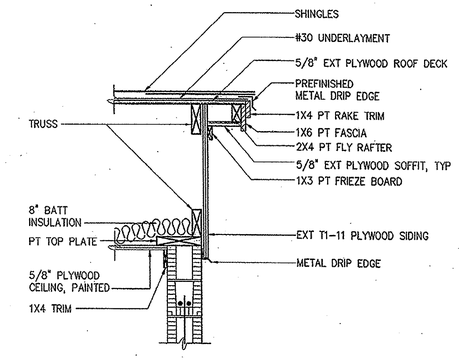

ROOF
AT RAKE

DETAIL 3 / A401
3/4"=1'-0"

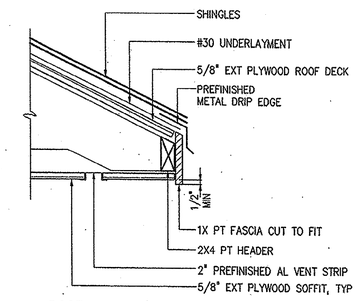

ROOF
AT EAVE

DETAIL 4 / A401
1 1/2"=1'-0"

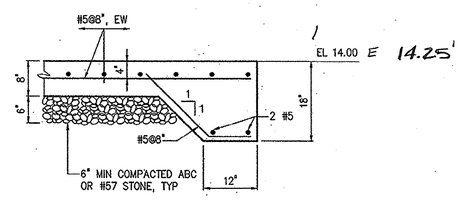

TYPICAL EXTERIOR
SLAB ON GRADE

SECTION B / A400
3/4"=1'-0"

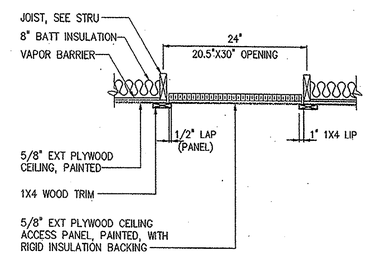

CEILING
ACCESS HATCH

DETAIL 5 / A401
1 1/2"=1'-0"

NOTES:

1. MASONRY VERTICAL REINFORCEMENT SHALL BE PLACED IN FULLY GROUTED CELLS AT 48" MAX, O.C. AND ADJACENT TO ALL OPENINGS AND CORNERS.

NO.	ISSUED FOR	DATE	BY
2	CONSTRUCTION	11/16/01	JBM
1	REGULATORY APPROVAL	8-31-01	JBM

DESIGNED WHR
DRAWN MMM
CHECKED JBM
PROJ. ENGR. JBM
APPROVED

SOUTH CAROLINA REGISTERED PROFESSIONAL ENGINEER RONALD L. TAYLOR 11/16/01

SOUTH CAROLINA REGISTERED PROFESSIONAL ENGINEER No.10488 JOSEPH B. MEEKS, JR. 11/16/01

HAZEN AND SAWYER
Environmental Engineers & Scientists
4011 WestChase Blvd, Raleigh, North Carolina 27607

GRAND STRAND WATER AND SEWER AUTHORITY
SOUTH CAROLINA

CONWAY WWTP
4.0 MGD EXPANSION AND UPGRADE

NEW ELECTRICAL BUILDING
ARCHITECTURAL
SECTIONS AND DETAILS

THE SCALE BAR SHOWN BELOW MEASURES ONE INCH LONG ON THE ORIGINAL DRAWING.

DATE AUGUST 2001
H & S JOB NUMBER 30631
CONTRACT NUMBER 1
DRAWING NUMBER A401
H&S FLAT FILE NO. 56

11/08/01 4:54pm FILE= H:\30631\ARCH\A401 by MMCINTOSH XREFs=MISC\30631-TB, 400\ELEC-A-S01, 400\ELEC-A-S02, 400\elec-a-da, 400\elec-a-db, 400\elec-a-dc, 400\ELEC-A-dd, 400\ELEC-A-DE.

35-004-042

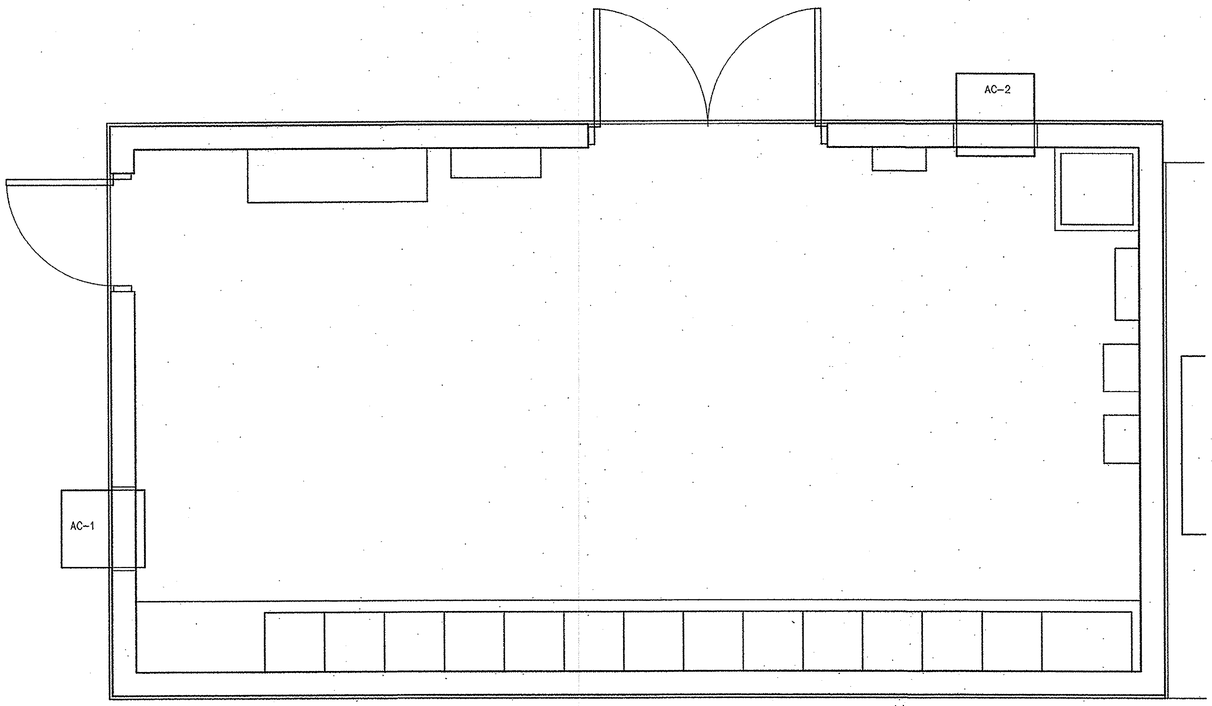

TOP PLAN

1/2"=1'-0"

NOTES:

1 AC-1, AND AC-2 SHALL HAVE HIGH EFFICIENCY ROTARY COMPRESSOR, AUTOMATIC THERMOSTAT, ENERGY SAVER SWITCH, SIX-WAY AIR FLOW CONTROL EXHAUST AND VENTILATION CONTROLS, THRE SPEED COOLING, AND CORROSION PROTECTION.

2 AC-2 SHALL HAVE 24 HOURS PROGRAMMABLE TIMER, TURBO SETTING FOR MAXIMUM COOLING, DIRTY FILTER INDICATOR, BUILT-IN DIAGNOSTICS, LIQUID CRYSTAL DISPLAY, SET TEMPERATURE AND ROOM TEMPERATURE DIGITAL READOUT, AND AUTO AIR CIRCULATOR.

AC UNIT SCHEDULE

MARK	LOCATION	TOTAL CAPACITY BTUH	HEATING CAPACITY BTUH	CFM	ELECTRICAL DATA			MANUFACTURER	MODEL	REMARKS
					VOLTS	HZ	PHASE			
AC-1	ELECTRICAL BUILDING	23500	15200	580	230	60	1	CARRIER	YHB243D	–
AC-2	ELECTRICAL BUILDING	26500	–	600	230	60	1	CARRIER	YCB273D	–

NO.	ISSUED FOR	DATE	BY
2	CONSTRUCTION	11/16/01	JBM
1	REGULATORY APPROVAL	8-31-01	JBM

DESIGNED JLH
DRAWN JLH
CHECKED JBM
PROJ. ENGR. H & S
APPROVED

SOUTH CAROLINA PROFESSIONAL ENGINEER REGISTERED No.16817 RONALD L. TAYLOR 11/16/01

SOUTH CAROLINA PROFESSIONAL ENGINEER REGISTERED No.10488 JOSEPH B. MEEKS, JR. 11/16/01

SOUTH CAROLINA PROFESSIONAL ENGINEER REGISTERED No.17210 GERALD J. RATESKY 11/16/01

HAZEN AND SAWYER
Environmental Engineers & Scientists
4011 WestChase Blvd, Raleigh, North Carolina 27607

GRAND STRAND WATER AND SEWER AUTHORITY
SOUTH CAROLINA

CONWAY WWTP
4.0 MGD EXPANSION AND UPGRADE

NEW ELECTRICAL BUILDING
HVAC
TOP PLAN AND SCHEDULE

THE SCALE BAR SHOWN BELOW MEASURES ONE INCH LONG ON THE ORIGINAL DRAWING.

DATE AUGUST 2001
H & S JOB NUMBER 30631
CONTRACT NUMBER 1
DRAWING NUMBER H400
H&S FLASHDRIVE NO. 56.

2001

33-004-043

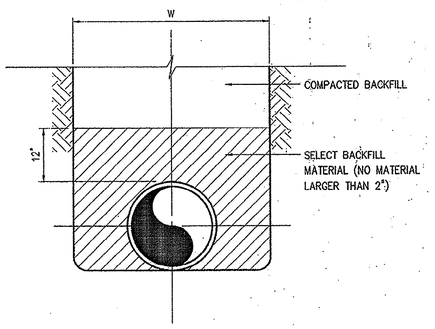

TYPE A
IN EARTH
0222100

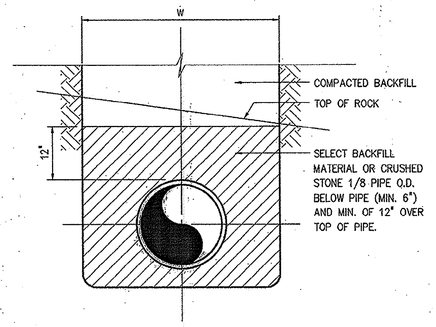

TYPE A
IN ROCK
0222101

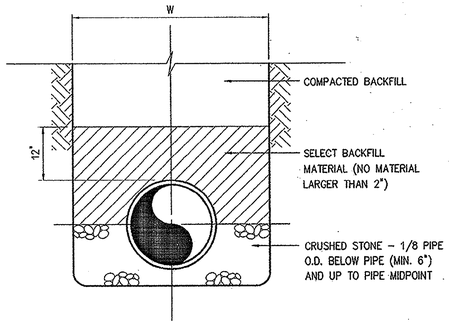

TYPE B
0222102

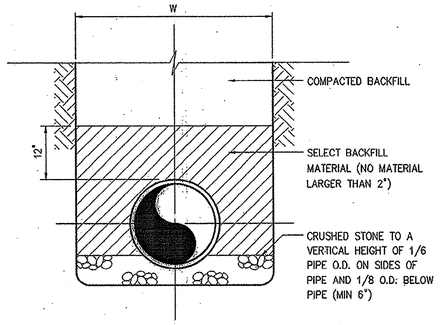

TYPE C
0222103

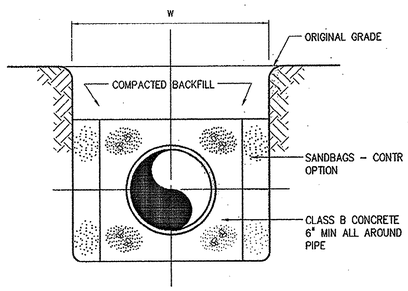

CONCRETE ENCASEMENT
(SEE NOTE 1)
0222104

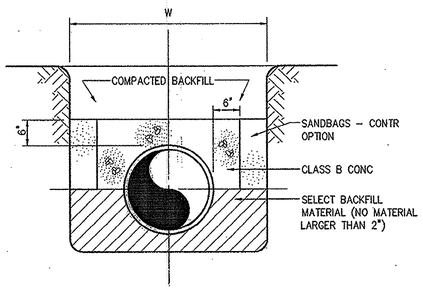

CONCRETE ARCH
(SEE NOTE 1)
0222105

PIPE BEDDING

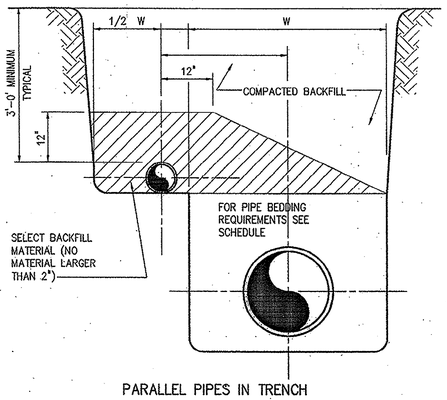

PARALLEL PIPES IN TRENCH
0222106

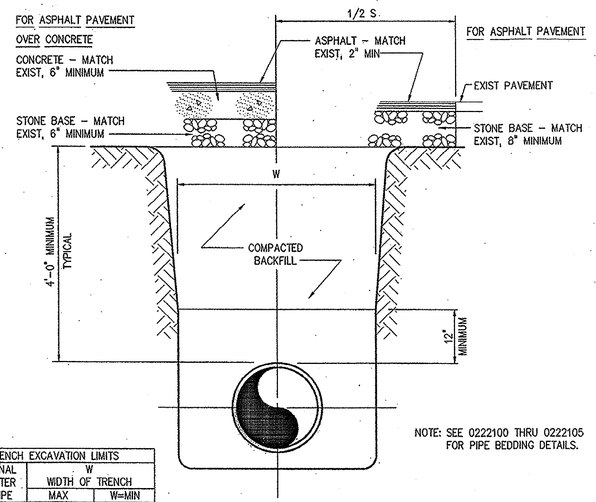

NOTE: SEE 0222100 THRU 0222105 FOR PIPE BEDDING DETAILS.

TYPICAL TRENCH
0222107

TRENCH EXCAVATION LIMITS		
INTERNAL DIAMETER OF PIPE	W WIDTH OF TRENCH MAX	W=MIN
4"–6"	3'–9"	2'–0"
8"–10"	3'–9"	2'–2"
12"	3'–9"	O.D.+2'
14"–16"	4'–2"	O.D.+2'
18"	4'–4"	O.D.+2'
20",21"	4'–8"	O.D.+2'
24"	4'–11"	O.D.+2'
27"	5'–9"	O.D.+2'
30"	6'–7"	O.D.+2'
36"	7'–4"	O.D.+2'
42"	8'–2"	O.D.+2'
48"	8'–9"	O.D.+2'
54"	9'–4"	O.D.+2'
60"	9'–10"	O.D.+2'
72"	11'–0"	O.D.+2'
78"	11'–6"	O.D.+2'
84"	12'–0"	O.D.+2'
90"	12'–6"	O.D.+2'
96"	13'–0"	O.D.+2'
108"	14'–0"	O.D.+2'
DEPTH OF CUT	S MAXIMUM PAVEMENT REPLACEMENT WIDTH	
0–6'	S=W+4'	
>6–8'	S=W+8'	
>8–10'	S=W+12'	
>10–12'	S=W+16'	
>12–14'	S=W+20'	
>14–16'	S=W+24'	
>16–18'	S=W+28'	
>18'	S=W+32'	

W = TRENCH WIDTH AT BOTTOM OF PIPE. TRENCH SIDE SLOPES SHALL BE IN ACCORDANCE WITH OSHA REQUIREMENTS.

NOTES:

1 CONCRETE THRUST BLOCKS, ARCHES, ENCASEMENTS, FLOWABLE FILL, ETC. SHALL BE FORMED USING PLYWOOD OR SANDBAGS TO PROVIDE REQ'D SHAPE.

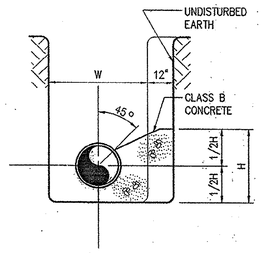

TYPICAL SECTION
TEE OR BEND

CONCRETE THRUST BLOCK SCHEDULE*											
PIPE SIZE (IN)	BEND 90°/TEE		45°		22 1/2°		11 1/4°		5 5/8°		DESIGN PRESSURE (PSI)
	H	L	H	L	H	L	H	L	H	L	
6.0	1.4	2.8	1.0	2.1	0.7	1.5	0.5	1.0	XXX	XXX	100
8.0	1.8	3.7	1.4	2.7	1.0	1.9	0.7	1.4	XXX	XXX	100
12.0	2.7	5.4	2.0	4.0	1.4	2.8	1.0	2.0	XXX	XXX	100
16.0	3.6	7.1	2.6	5.2	1.9	3.7	1.3	2.6	XXX	XXX	100
24.0	5.3	10.5	3.9	7.7	2.8	5.5	2.0	3.9	XXX	XXX	100
30.0	6.5	13.1	4.8	9.6	3.4	6.9	2.4	4.9	XXX	XXX	100
36.0	7.8	15.6	5.8	11.5	4.1	8.2	2.9	5.8	XXX	XXX	100
42.0	9.1	18.2	6.7	13.4	4.8	9.5	3.4	6.8	XXX	XXX	100
48.0	10.4	20.7	7.6	15.3	5.4	10.9	3.9	7.7	XXX	XXX	100
54.0	11.7	23.3	8.6	17.1	6.1	12.2	4.3	8.7	XXX	XXX	100

* BASED ON AVERAGE SOIL PASSIVE BEARING STRENGTH OF 2000 PSF USING SF OF 1.5

CONCRETE THRUST BLOCKING SHALL BE USED ONLY AS APPROVED BY ENGINEER.

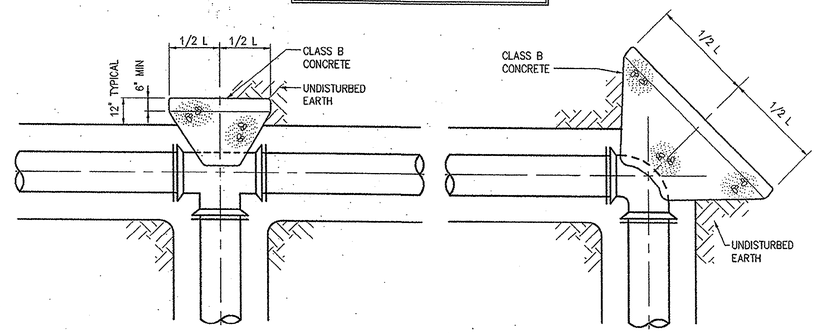

PLAN – TEE
THRUST BLOCKS
(SEE NOTE 1)
PLAN – BEND
0222108

NOTE: FOR VERTICAL BEND (DOWN) IN EXCESS OF 11 1/4" ANCHORAGE SHALL BE AS RECOMMENDED BY THE ENGINEER.

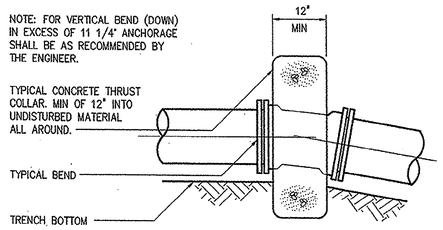

ELEVATION

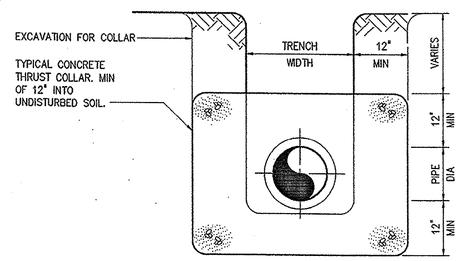

THRUST COLLAR
0222111

NOTE: NO ENCASEMENT REQUIRED FOR SPACE GREATER THAN 12"

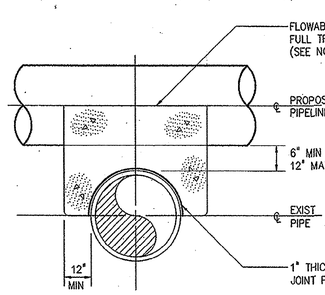

PROPOSED PIPELINE OVER EXIST PIPE

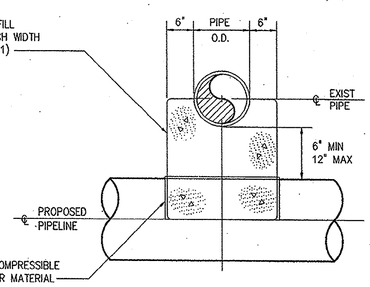

PROPOSED PIPELINE UNDER EXIST PIPE
0222118

NO.	ISSUED FOR	DATE	BY
2	CONSTRUCTION	11/16/01	JBM
1	REGULATORY APPROVAL	8-31-01	JBM

DESIGNED H & S
DRAWN H & S
CHECKED JBM
PROJ. ENGR. JBM
APPROVED JBM

SOUTH CAROLINA PROFESSIONAL ENGINEER No. 16572 RONALD L. TAYLOR 11/16/01

SOUTH CAROLINA REGISTERED PROFESSIONAL ENGINEER No. 10488 JOSEPH B. MEEKS JR. 11/16/01

HAZEN AND SAWYER
Environmental Engineers & Scientists
4011 WestChase Blvd, Raleigh, North Carolina 27607

GRAND STRAND WATER AND SEWER AUTHORITY
SOUTH CAROLINA
CONWAY WWTP
4.0 MGD EXPANSION AND UPGRADE

MISCELLANEOUS STANDARD DETAILS

THE SCALE BAR SHOWN BELOW MEASURES ONE INCH LONG ON THE ORIGINAL DRAWING.

DATE AUGUST 2001
H & S JOB NUMBER 30631
CONTRACT NUMBER 1
DRAWING NUMBER D1
H&S FLAT FILE NO. 56

08/10/01 11:26am FILE= N:\30631\DETAILS\D01 by ENNG XREFs=0222108, 0222114, 0222110, 0222106, 0222104, 0222100, 0222102, 0222103, 0222105, 0222101, 0222107, 0222111, 0222118, MSC\30631-TB,

35-009-044

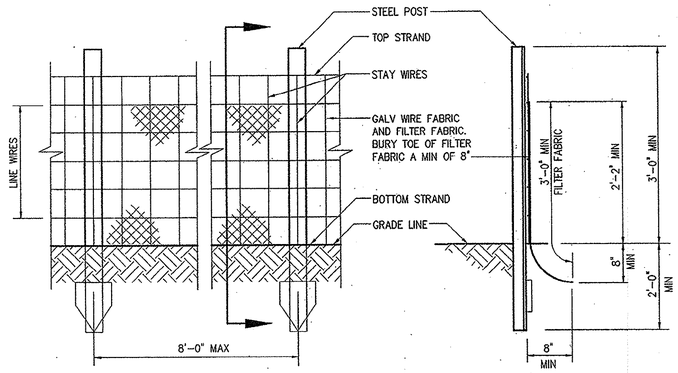

ELEVATION
SILT FENCE

SECTION
SILT FENCE

NOTE:
1. EXTRA STRENGTH FILTER FABRIC (AS APPROVED BY ENGINEER) WITH 6'-0" POST SPACING DOES NOT REQUIRE MESH SUPPORT FENCE.
2. FILTER FABRIC SHALL BE WIRED DIRECTLY TO POST.

0227000

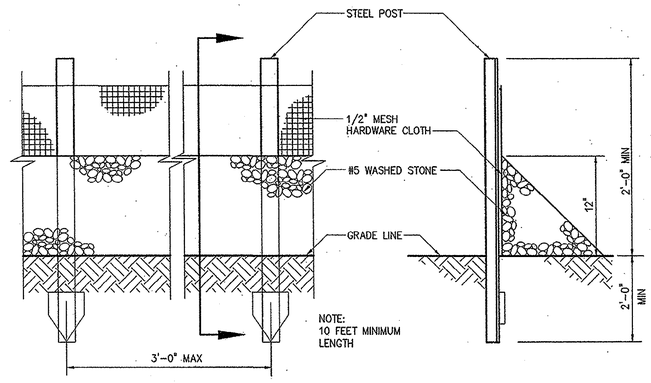

ELEVATION
STONE FILTER

SECTION
STONE FILTER

0227008

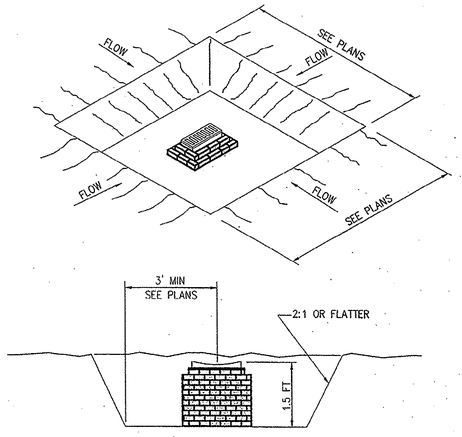

CROSS SECTION
YARD INLET SEDIMENT CONTROL

0227006

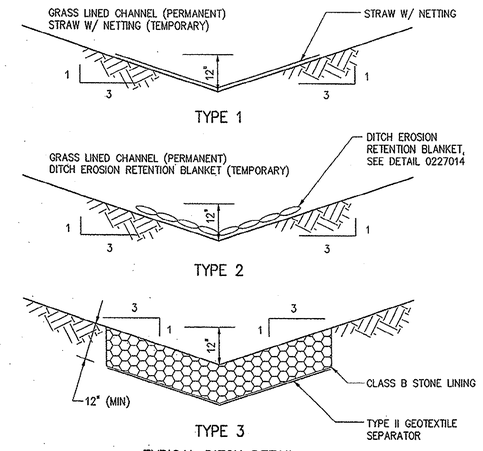

TYPICAL DITCH DETAIL

(SEE DETAIL 0227021)

0227011

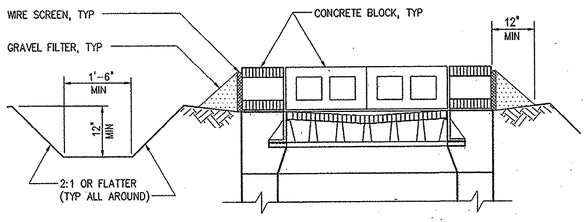

YARD INLET EROSION CONTROL

0227001

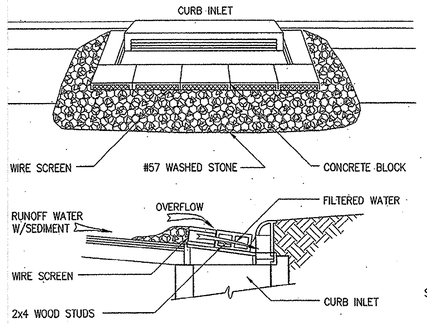

CURB INLET SEDIMENT CONTROL

0227002

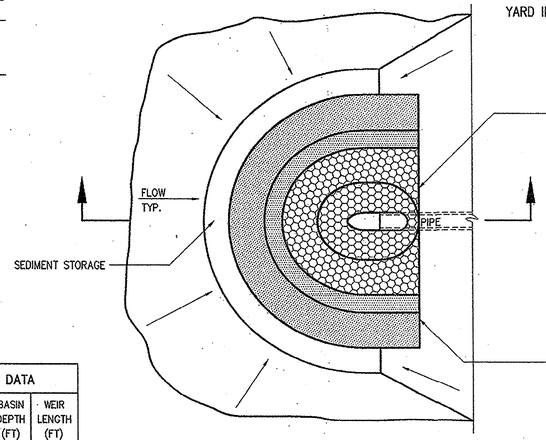

PLAN
GRAVEL AND RIP RAP FILTER BERM BASIN

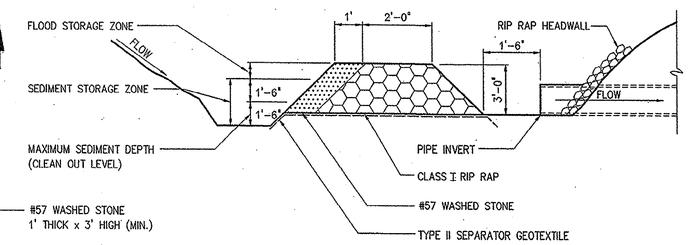

SECTION
GRAVEL AND RIP RAP FILTER BERM BASIN

0227016

SEDIMENT BASIN DATA				
BASIN NUMBER	BASIN WIDTH (FT)	BASIN LENGTH (FT)	BASIN DEPTH (FT)	WEIR LENGTH (FT)
(A)				
(B)				
(C)				
(D)				
(E)				
(F)				
(G)				
(H)				

0227007

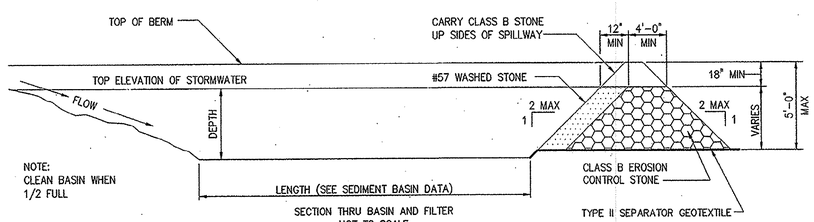

SECTION THRU BASIN AND FILTER
NOT TO SCALE

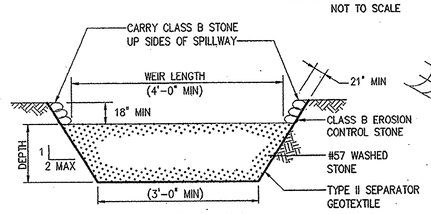

SECTION THRU BERM AND FILTER
NOT TO SCALE

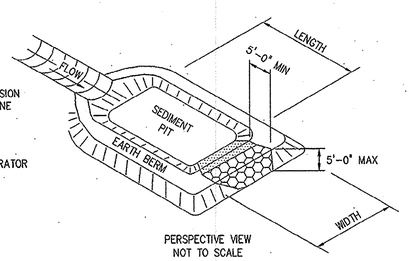

PERSPECTIVE VIEW
NOT TO SCALE

TEMPORARY SEDIMENT BASIN

0227004

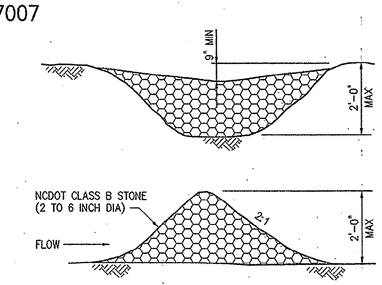

FOR LARGER CHANNELS USE NCDOT CLASS 1 RIP-RAP FACED WITH # 57 WASHED STONE.

STONE CHECK DAM

0227003

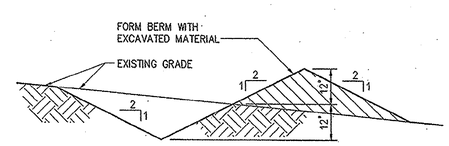

TEMPORARY DIVERSION SWALE

0227009

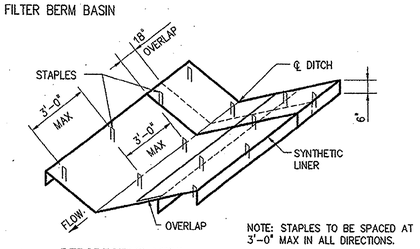

NOTE: STAPLES TO BE SPACED AT 3'-0" MAX IN ALL DIRECTIONS.

PERSPECTIVE VIEW

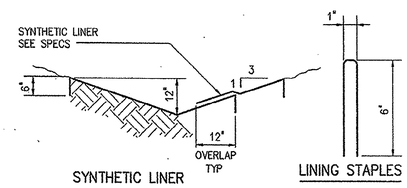

SYNTHETIC LINER

LINING STAPLES

0227014

NO.	ISSUED FOR	DATE	BY
2	CONSTRUCTION	11/16/01	JBM
1	REGULATORY APPROVAL	8-31-01	JBM

DESIGNED H & S
DRAWN H & S
CHECKED JBM
PROJ. ENGR. JBM
APPROVED JBM

SOUTH CAROLINA PROFESSIONAL ENGINEER No. 16512 RONALD L. TAYLOR 11/16/01

SOUTH CAROLINA REGISTERED PROFESSIONAL ENGINEER No.10488 JOSEPH B. MEEKS 11/16/01

HAZEN AND SAWYER
Environmental Engineers & Scientists
4011 WestChase Blvd, Raleigh, North Carolina 27607

GRAND STRAND WATER AND SEWER AUTHORITY
SOUTH CAROLINA

CONWAY WWTP
4.0 MGD EXPANSION AND UPGRADE

MISCELLANEOUS STANDARD DETAILS

THE SCALE BAR SHOWN BELOW MEASURES ONE INCH LONG ON THE ORIGINAL DRAWING.

DATE AUGUST 2001
H & S JOB NUMBER 30631
CONTRACT NUMBER 1
DRAWING NUMBER D2
H&S FLAT FILE NO. 56

08/10/01 11:22am FILE= H:\30631\DETAILS\D02 by ENWG XREFs=0227000, 0227001, 0227002, 0227003, 0227008, 0227011, 0227014, 0227004, 0227007, 0227006, 0227016, 0227009, MISC\30631-TB,

35-004-038045

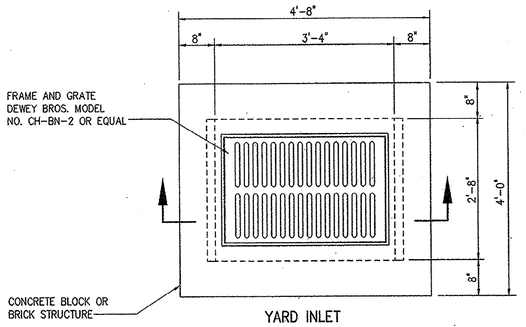

YARD INLET

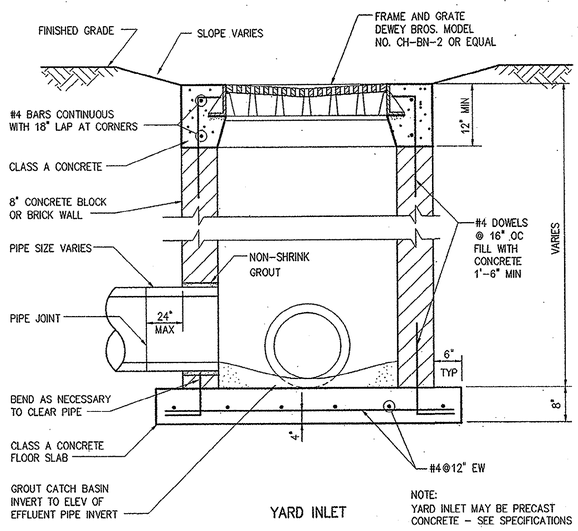

YARD INLET

NOTE:
YARD INLET MAY BE PRECAST
CONCRETE - SEE SPECIFICATIONS

0243102

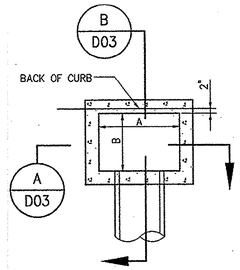

PLAN

NOT TO SCALE

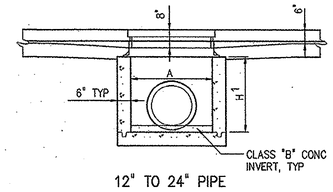

12" TO 24" PIPE

SECTION A D03

NOT TO SCALE

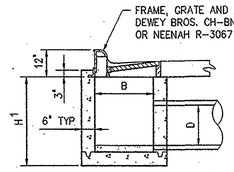

12" TO 24" PIPE

SECTION B D03

NOT TO SCALE

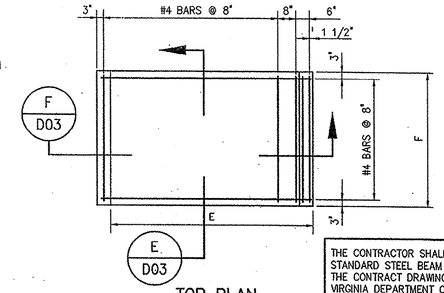

TOP PLAN

NOT TO SCALE

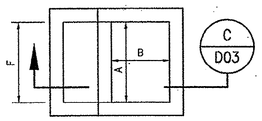

PLAN

NOT TO SCALE

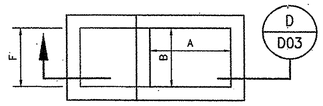

PLAN

NOT TO SCALE

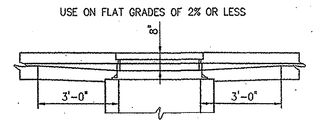

ELEVATION

NORMAL CURB AND GUTTER ON LIGHT GRADES

NOT TO SCALE

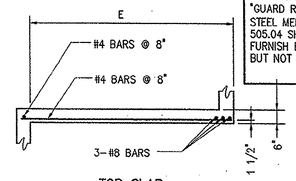

TOP SLAB

SECTION F D03

NOT TO SCALE

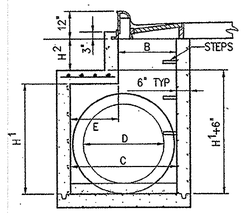

30" TO 36" PIPE

SECTION C D03

NOT TO SCALE

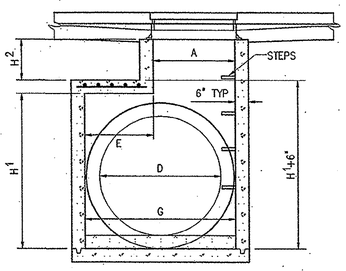

42" TO 54" PIPE

SECTION D D03

NOT TO SCALE

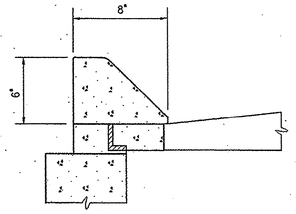

MEDIAN CURB OPTION

NOT TO SCALE

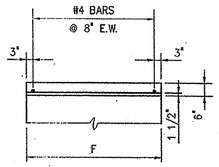

TOP SLAB

SECTION E D03

NOT TO SCALE

STANDARD CONCRETE CURB INLET
12" THROUGH 54" PIPE

0243104

NOTES

1 THE CONTRACTOR SHALL PROVIDE AND INSTALL STANDARD STEEL BEAM GUARD RAIL AS INDICATED ON THE CONTRACT DRAWINGS IN ACCORDANCE WITH THE NORTH CAROLINA DEPARTMENT OF TRANSPORTATION ROADWAY STANDARD DRAWINGS, LATEST EDITION FOR DRAWING 862.01 AND NORTH CAROLINA DEPARTMENT OF TRANSPORTATION STANDARD SPECIFICATIONS FOR ROADS AND STRUCTURES, LATEST EDITION, SECTION 862, "GUARD RAIL", EXCEPT THAT SUBSECTIONS 862-5 AND 862-6 SHALL BE OMITTED. THE CONTRACTOR MAY FURNISH EITHER WOODEN POSTS OR METAL POSTS, BUT NOT BOTH.

THE CONTRACTOR SHALL PROVIDE AND INSTALL STANDARD STEEL BEAM GUARD RAIL AS INDICATED ON THE CONTRACT DRAWINGS IN ACCORDANCE WITH THE SOUTH CAROLINA DEPARTMENT OF HIGHWAYS AND PUBLIC TRANSPORTATION, STANDARD DRAWINGS FOR ROAD CONSTRUCTION, LATEST EDITION FOR DRAWING NO.'S 805-1, 805-2 AND 805-3A AND SECTION 805, "GUARD RAIL", OF THE SOUTH CAROLINA STATE HIGHWAY DEPARTMENT STANDARD SPECIFICATIONS FOR HIGHWAY CONSTRUCTION, LATEST EDITION, EXCEPT THAT SUBSECTIONS 805.06, 805.09, 805.10, 805.11, 805.12 AND 805.13 SHALL BE OMITTED. END TREATMENTS SHALL BE TYPE "B". THE CONTRACTOR MAY FURNISH EITHER WOODEN POSTS OR METAL POSTS, BUT NOT BOTH.

THE CONTRACTOR SHALL PROVIDE AND INSTALL STANDARD STEEL BEAM GUARD RAIL AS INDICATED ON THE CONTRACT DRAWINGS IN ACCORDANCE WITH THE VIRGINIA DEPARTMENT OF TRANSPORTATION ROAD AND BRIDGE STANDARDS, LATEST EDITION FOR VOLUME 1, SECTION 501 AND VIRGINIA DEPARTMENT OF TRANSPORTATION ROAD AND BRIDGE STANDARD SPECIFICATIONS, LATEST EDITION, SECTION 221 - "GUARD RAIL" AND SECTION 505 - "GUARD RAIL AND STEEL MEDIAN BARRIERS", EXCEPT THAT SUBSECTION 505.04 SHALL BE OMITTED. THE CONTRACTOR MAY FURNISH EITHER WOODEN POSTS OR METAL POSTS, BUT NOT BOTH.

DELETE NOTES THAT DO NOT APPLY TO YOUR PROJECT, IF YOU ARE NOT SURE, ASK PROJECT MANAGER!

MINIMUM DIMENSIONS FOR CONCRETE CURB INLETS

	DIMENSIONS OF BOX AND PIPE						COVER DIMENSIONS	
PIPE	SPAN	WIDTH	WIDTH	SPAN	HEIGHT	HEIGHT		
D	A	B	C	G	MIN H1	H2	E	F
12"	3'-0"	2'-2"	—	—	2'-6"	—	—	—
15"	3'-0"	2'-2"	—	—	2'-9"	—	—	—
18"	3'-0"	2'-2"	—	—	3'-1"	—	—	—
24"	3'-0"	2'-2"	—	—	3'-7"	—	—	—
30"	3'-0"	2'-2"	3'-4"	3'-4"	3'-6"	VARIABLE	1'-8"	4'-0"
36"	3'-0"	2'-2"	3'-10"	3'-10"	4'-1"		2'-2"	4'-0"
42"	3'-0"	2'-2"	—	4'-5"	4'-10"		1'-11"	3'-2"
48"	3'-0"	2'-2"	—	5'-0"	5'-4"		2'-6"	3'-2"
54"	3'-0"	2'-2"	—	5'-7"	5'-11'		3'-1"	3'-2"

CONCRETE CURB INLET NOTES:

1. CLASS "A" CONCRETE TO BE USED THROUGHOUT.
2. ALL WALLS SHALL BE REINFORCED WITH #4 BARS @ AT 12" EACH WAY PLACED AT MID-DEPTH. BARS SHALL BE BENT AT CORNERS WITH STD. 90° HOOKS. BOTTOM SLAB SHALL BE REINFORCED WITH #5 AT 12" EACH WAY AT MID-DEPTH.
3. ALL CURB INLETS OVER 3'-6" IN DEPTH TO BE PROVIDED WITH STEPS 14" OC. STEPS SHALL BE IN ACCORDANCE WITH SPECIFICATIONS.
4. FOR 8'-0" IN HEIGHT OR LESS USE 6" WALLS AND BOTTOM SLAB. OVER 8'-0" AND UP TO 15'-0" USE 8" WALLS AND BOTTOM SLAB.

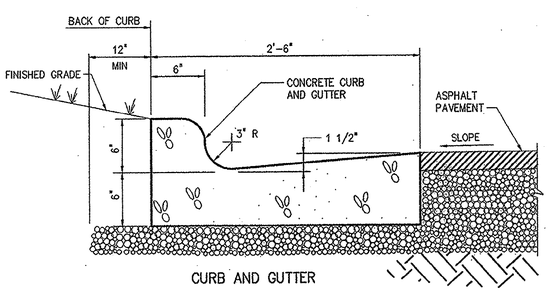

CURB AND GUTTER

0242000

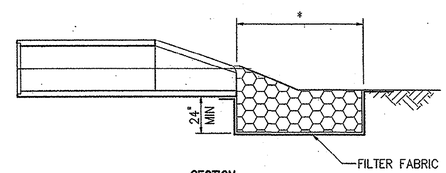

SECTION

* SEE SITE
GRADING PLAN

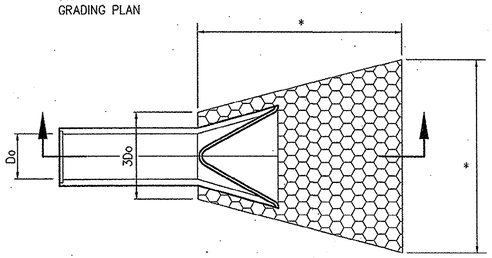

FLARED END SECTION WITH RIP-RAP APRON

0243300

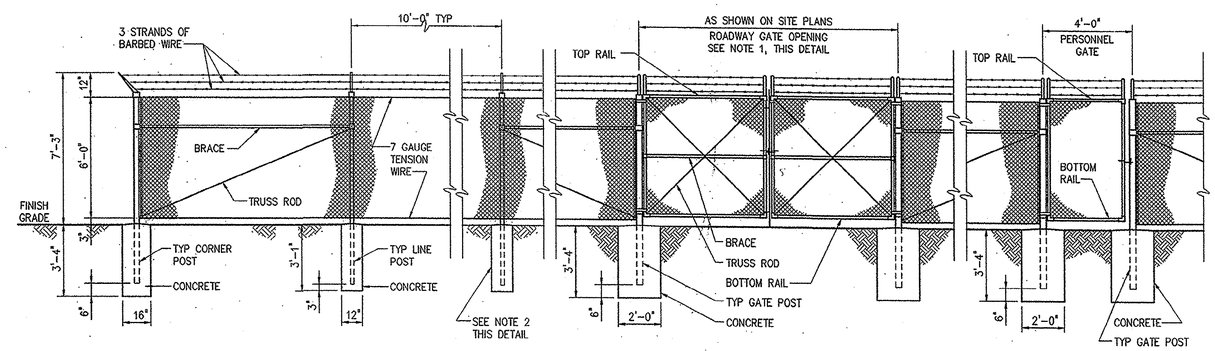

CORNER/LINE

CHAIN LINK FENCE

0244400

ROADWAY GATE

PERSONNEL GATE

NOTES: 1. PROVIDE LATCHING DEVICES TO HOLD GATES IN OPEN POSITION.

2. IF ROCK IS ENCOUNTERED WHEN SETTING POSTS, DRILL HOLES 4 INCHES LARGER IN DIAMETER THAN POSTS AND BACKFILL TO GRADE WITH CLASS "B" CONCRETE.

NO.	ISSUED FOR	DATE	BY
2	CONSTRUCTION	11/16/01	JBM
1	REGULATORY APPROVAL	8-31-01	JBM

DESIGNED H & S
DRAWN H & S
CHECKED JBM
PROJ. ENGR. JBM
APPROVED JBM

SOUTH CAROLINA REGISTERED PROFESSIONAL ENGINEER No. 16812 RONALD L. TAYLOR 11/16/01

SOUTH CAROLINA REGISTERED PROFESSIONAL ENGINEER No. 10488 JOSEPH B. MEEKS JR. 11/16/01

HAZEN AND SAWYER
Environmental Engineers & Scientists
4011 WestChase Blvd, Raleigh, North Carolina 27607

GRAND STRAND WATER AND SEWER AUTHORITY
SOUTH CAROLINA

CONWAY WWTP
4.0 MGD EXPANSION AND UPGRADE

MISCELANEOUS STANDARD DETAILS

THE SCALE BAR SHOWN BELOW MEASURES ONE INCH LONG ON THE ORIGINAL DRAWING.

DATE AUGUST 2001
H & S JOB NUMBER 30631
CONTRACT NUMBER 1
DRAWING NUMBER D3
H&S FLAT FILE NO. 56

08/10/01 11:11am FILE= H:\30631\DETAILS\D03 by EHNG XREFs=0243104, 0243300, 0243101, 0243102, 0244400, 0242000, MISC\30631-TB,

35-009-039048

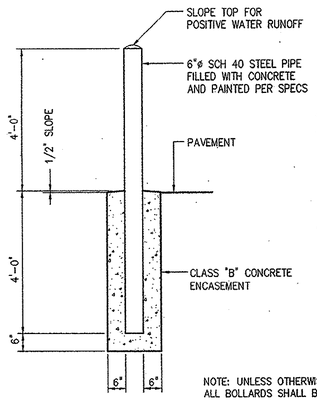

BOLLARD TYPE 1

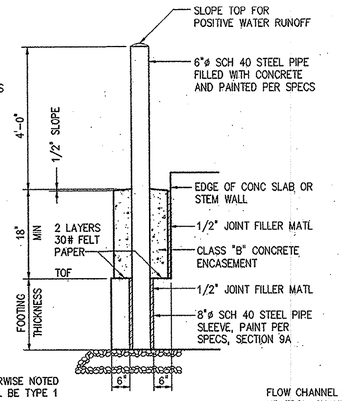

NOTE: UNLESS OTHERWISE NOTED ALL BOLLARDS SHALL BE TYPE 1

BOLLARD TYPE 2

0245100

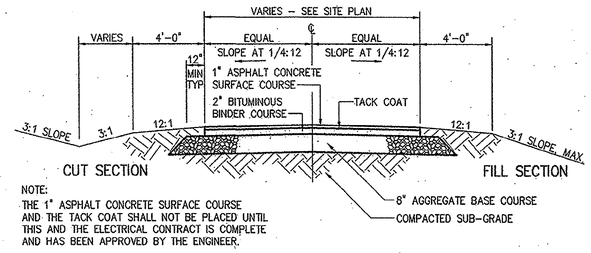

NOTE:
THE 1" ASPHALT CONCRETE SURFACE COURSE AND THE TACK COAT SHALL NOT BE PLACED UNTIL THIS AND THE ELECTRICAL CONTRACT IS COMPLETE AND HAS BEEN APPROVED BY THE ENGINEER.

TYPICAL ROADWAY SECTION

0251000

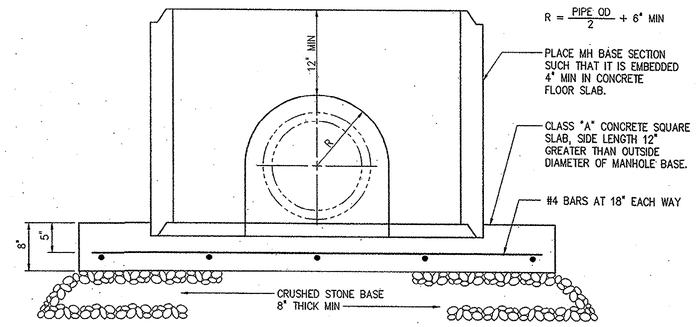

DOGHOUSE PRECAST MANHOLES

0260102

NOTE: FILL ANNULAR SPACE BETWEEN OUTSIDE OF PIPE AND MH WITH CONCRETE OR MASONRY TO INSURE WATERTIGHTNESS.

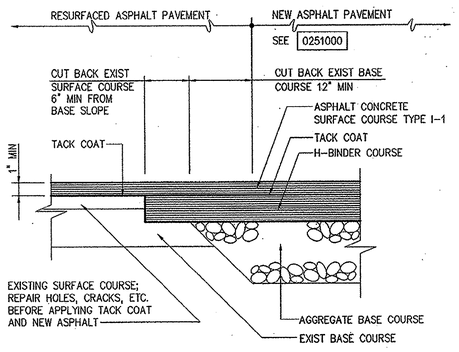

TYPICAL PAVEMENT JUNCTION WITH RESURFACING OF EXISTING PAVEMENT

0251300

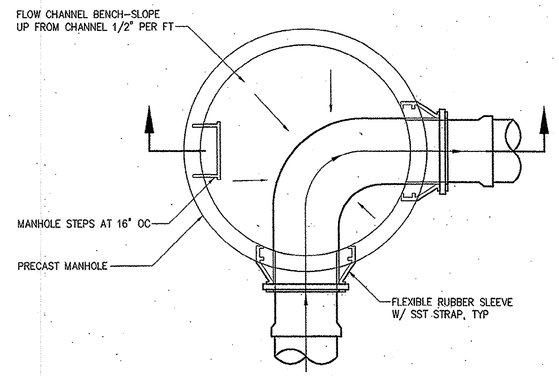

PLAN

0260100

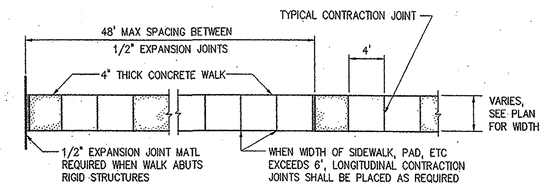

TYPICAL CONCRETE WALKWAY

0245000

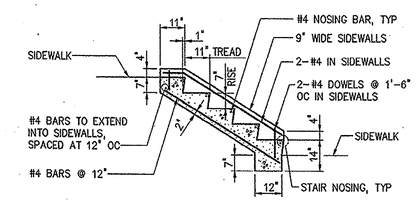

NOTE: YARD STEPS HAVING MORE THAN THREE RISERS SHALL HAVE HANDRAILS IN THE SIDEWALKS. THE WIDTH OF THE YARD STEPS TREAD SHALL BE THE SAME AS THE ADJACENT SIDEWALK.

WHERE VERTICAL DIFFERENCE BETWEEN SIDEWALK ELEVATIONS IS GREATER THAN 12'-0", AN INTERMEDIATE LANDING IS REQUIRED, SEE DETAIL

CONCRETE YARD STEPS

0245001

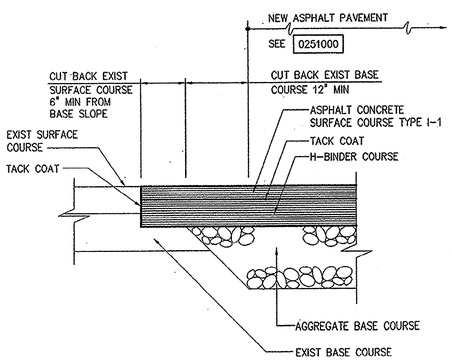

TYPICAL PAVEMENT JUNCTION

0251301

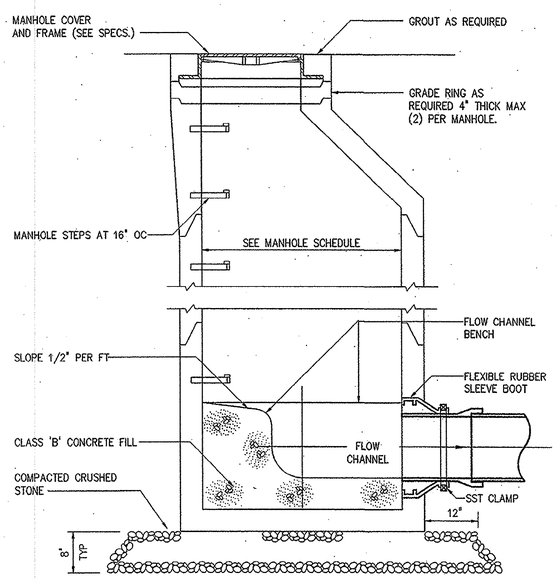

SECTION

0260101

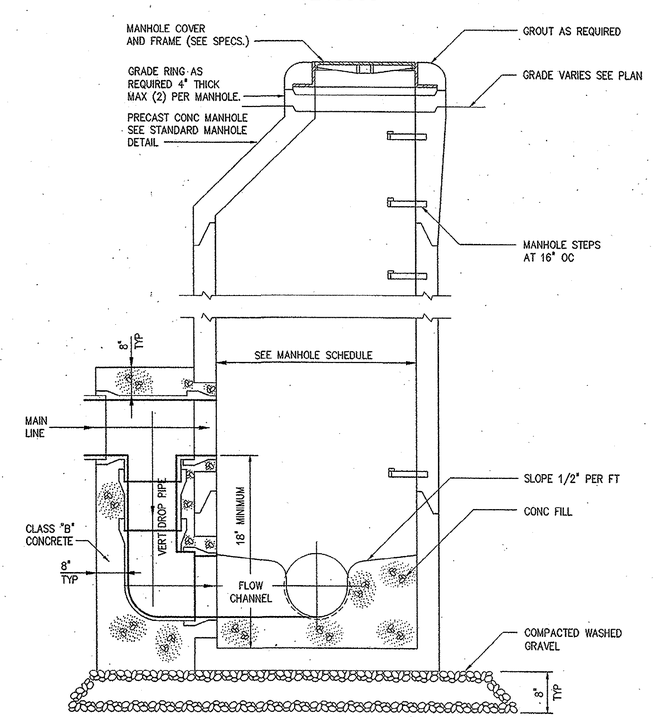

DROP MANHOLE

0260109

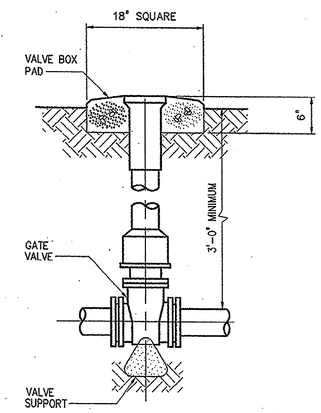

VALVE BOX

0264000

NO.	ISSUED FOR	DATE	BY
2	CONSTRUCTION	11/16/01	JBM
1	REGULATORY APPROVAL	8-31-01	JBM

DESIGNED H & S
DRAWN H & S
CHECKED JBM
PROJ. ENGR. JBM
APPROVED JBM

SOUTH CAROLINA REGISTERED PROFESSIONAL ENGINEER No. 16512 RONALD L. TAYLOR 11/16/01

SOUTH CAROLINA REGISTERED PROFESSIONAL ENGINEER No. 10488 JOSEPH B. MECKS 11/16/01

HAZEN AND SAWYER
Environmental Engineers & Scientists
4011 WestChase Blvd, Raleigh, North Carolina 27607

GRAND STRAND WATER AND SEWER AUTHORITY
SOUTH CAROLINA

CONWAY WWTP
4.0 MGD EXPANSION AND UPGRADE

MISCELLANEOUS STANDARD DETAILS

THE SCALE BAR SHOWN BELOW MEASURES ONE INCH LONG ON THE ORIGINAL DRAWING.

DATE AUGUST 2001
H & S JOB NUMBER 30631
CONTRACT NUMBER 1
DRAWING NUMBER D4
H&S FLAT FILE NO. 56.

08/16/01 11:12am FILE= M:\30631\DETAILS\D04 by EMNC XREFs=0251300, 0251000, 0251301, 0260100, 0260101, 0260102, 0264000, 0260109, 0245100, 0245000, 0245001, MISC\30631-TB,

33-004-047

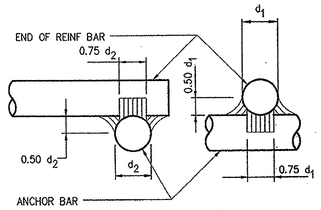

NOTES: BARS TO BE WELDED SHALL CONFORM TO ASTM A706. WELDING SHALL BE DONE BY CERTIFIED WELDERS IN CONFORMANCE WITH AWS D1.4. WELDING IS PERMITTED ONLY WHERE SHOWN ON PLANS OR OTHERWISE APPROVED BY THE ENGINEER.

REINFORCING BAR WELDMENT

0321000

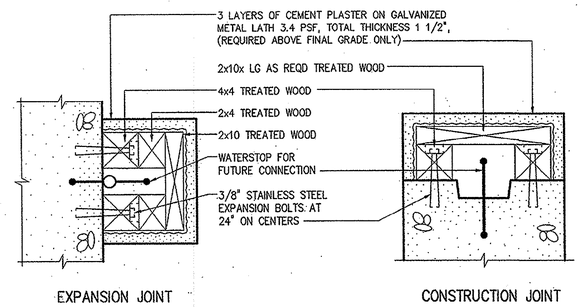

WATERSTOP PROTECTION AT CONNECTION WITH FUTURE CONSTRUCTION

0325300

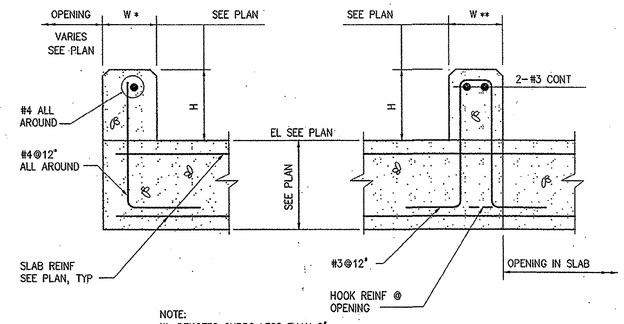

NOTE:
W* DENOTES CURBS LESS THAN 8"
W** DENOTES CURBS EQUAL TO OR GREATER THAN 8"
DOWELS MAY BE CAST IN OR ANCHORED WITH DOWEL ADHESIVE SYSTEM WITH A 6" MINIMUM EMBEDMENT.

TYPICAL CONCRETE CURB

0331004

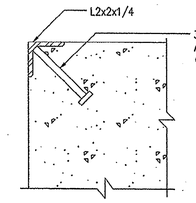

NOTE: CORNER GUARD REQUIRED ONLY WHERE SHOWN ON PLANS

CORNER GUARD

0554001

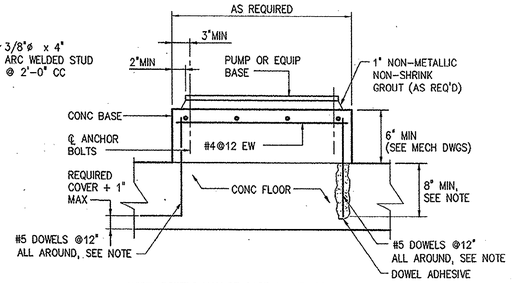

NOTE: DOWELS MAY BE CAST IN WITH 90° HOOK OR ANCHORED WITH DOWEL ADHESIVE AT CONTRACTORS OPTION. WHERE FLOOR IS 8" THICK OR LESS, USE #4 DOWELS EMBEDDED TO WITHIN 2" OF BOTTOM OF FLOOR SLAB.

TYP PUMP OR EQUIP BASE

0331600

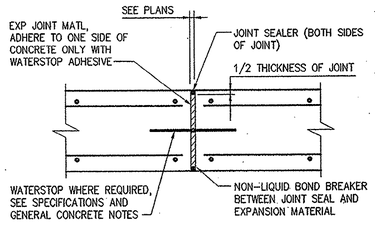

TYPICAL EXPANSION JOINT

0325100

NOTES

1. JOINTS SHALL BE FORMED BY AN APPROVED JOINT INSERT. SAWCUTTING OF JOINTS WILL NOT BE ALLOWED.
2. DEPTH SHALL BE 1 1/2" IN REINF CONC DEPTH SHALL BE 1/3 OF CONCRETE THICKNESS IN UNREINFORCED CONCRETE PAVEMENT.

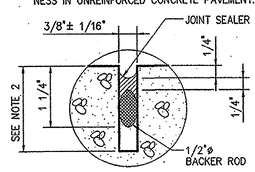

TYPICAL CONTRACTION JOINT

0325101

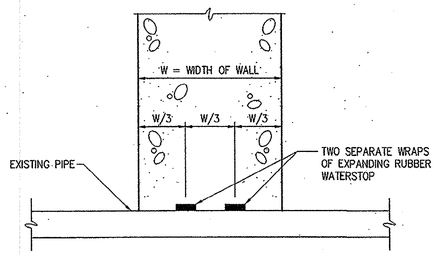

NOTE: EACH WRAP SHALL BE LAPPED 4", WITH THE LAP ABUTTING SIDE BY SIDE. LAPS SHALL BE SEPARATED BY 180°.

WATERSTOP CONNECTION AROUND EXISTING PIPE

0325303

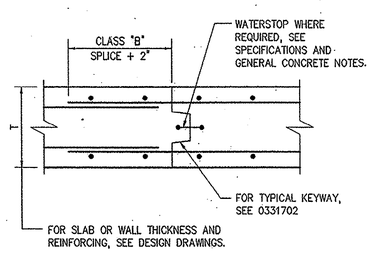

TYPICAL CONSTRUCTION JOINT

0331701

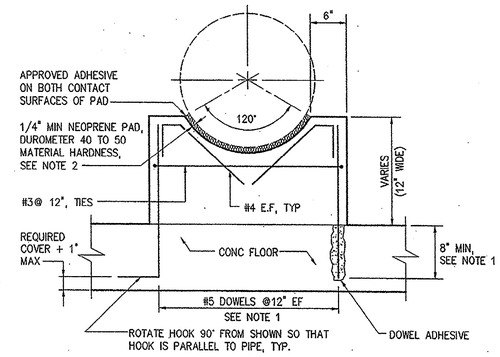

NOTES: 1 DOWELS MAY BE CAST IN WITH 90° HOOK OR ANCHORED WITH DOWEL ADHESIVE AT CONTRACTORS OPTION. WHERE FLOOR IS 8" THICK OR LESS, USE #4 DOWELS EMBEDDED TO WITHIN 2" OF BOTTOM OF FLOOR SLAB.

2 ENGINEER SHALL VERIFY THICKNESS OF PAD WILL ACCOMMODATE DESIGN MOVEMENT, PARTICULARLY FOR OUTSIDE AERIAL PIPE.

CRADLE PIPE SUPPORT

0331601

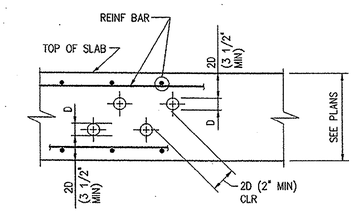

NOTE:
D DENOTES PIPE OR CONDUIT OD

PIPE OR CONDUIT EMBEDDED IN SLAB

0331604

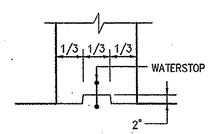

TYPICAL KEYWAY

0331702

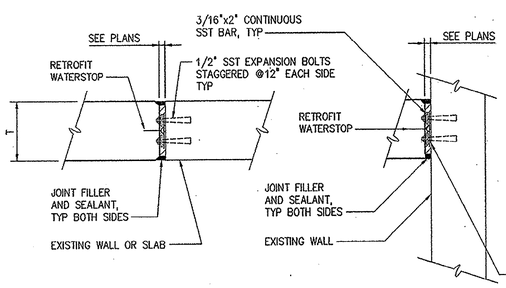

EXPANSION JOINT

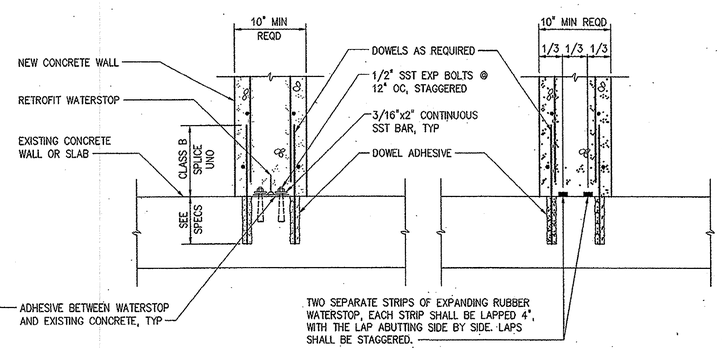

CONSTRUCTION JOINT WITH SPLIT WATERSTOP

CONSTRUCTION JOINT WITH EXPANDING RUBBER WATERSTOP

WATERSTOP CONNECTIONS TO EXISTING STRUCTURES (PLAN AT WALLS OR SECTION AT SLAB)

0325302

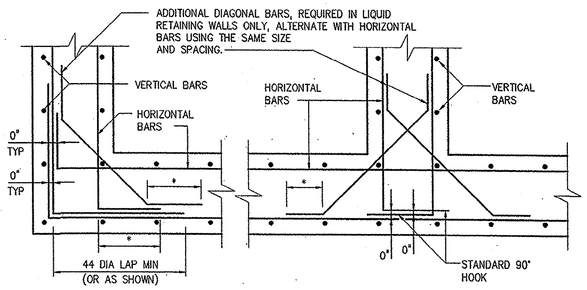

CORNER

* = STD 90° HOOK LENGTH

INTERSECTION

TYPICAL WALL REINFORCING

0331700

PLACE EXTRA BARS OF THE SAME SIZE AS THE INTERRUPTED BARS AT EACH SIDE OF OPENINGS. QUANTITY OF EXTRA BARS AT EACH SIDE SHALL EQUAL HALF THE QUANTITY OF INTERRUPTED BARS, EXCEPT WHERE NOTED OTHERWISE. PROVIDE ONE DIAGONAL BAR EACH SIDE OF OPENING, SIZE TO BE EQUAL TO MAIN REINFORCING. (TYPICAL EACH FACE)

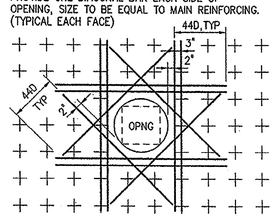

NOTE: THIS DETAIL IS FOR OPENINGS 8"ø OR LARGER, FOR SMALLER OPENINGS, BEND BARS.

TYPICAL REINF AT OPENINGS

0331703

NO.	ISSUED FOR	DATE	BY
2	CONSTRUCTION	11/14/01	JBM
1	REGULATORY APPROVAL	8-31-01	JBM

DESIGNED H&S
DRAWN H&S
CHECKED JBM
PROJ. ENGR. JBM
APPROVED JBM

SOUTH CAROLINA REGISTERED PROFESSIONAL ENGINEER No.16512 RONALD L. TAYLOR 11/14/01

SOUTH CAROLINA REGISTERED PROFESSIONAL ENGINEER No.10488 JOSEPH B. MEEKS 11/16/01

HAZEN AND SAWYER
Environmental Engineers & Scientists
4011 WestChase Blvd, Raleigh, North Carolina 27607

GRAND STRAND WATER AND SEWER AUTHORITY
SOUTH CAROLINA

CONWAY WWTP
4.0 MGD EXPANSION AND UPGRADE

MISCELLANEOUS STANDARD DETAILS

THE SCALE BAR SHOWN BELOW MEASURES ONE INCH LONG ON THE original DRAWING.

DATE AUGUST 2001
H & S JOB NUMBER 30631
CONTRACT NUMBER 1
DRAWING NUMBER D5
H&S FLAT FILE NO. 56

08/10/01 11:12am FILE: H:\30631\DETAILS\D04 by EVNC XREFs=0251300, 0251000, 0251301, 0260100, 0260101, 0260102, 0264000, 0260103, 0245100, 0245000, 0245001, M30\30631-TB,

35-004-048

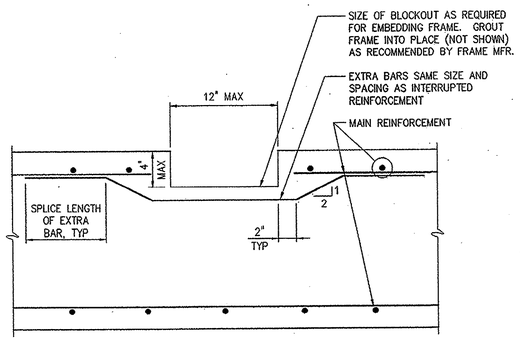

TYPICAL BLOCKOUT FOR EMBEDDED EQUIPMENT FRAME

0331710

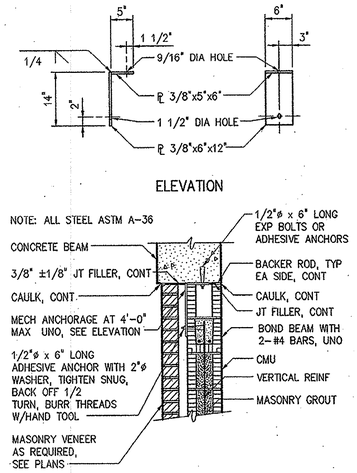

MASONRY WALL TO CONCRETE BEAM CONNECTION

0420108

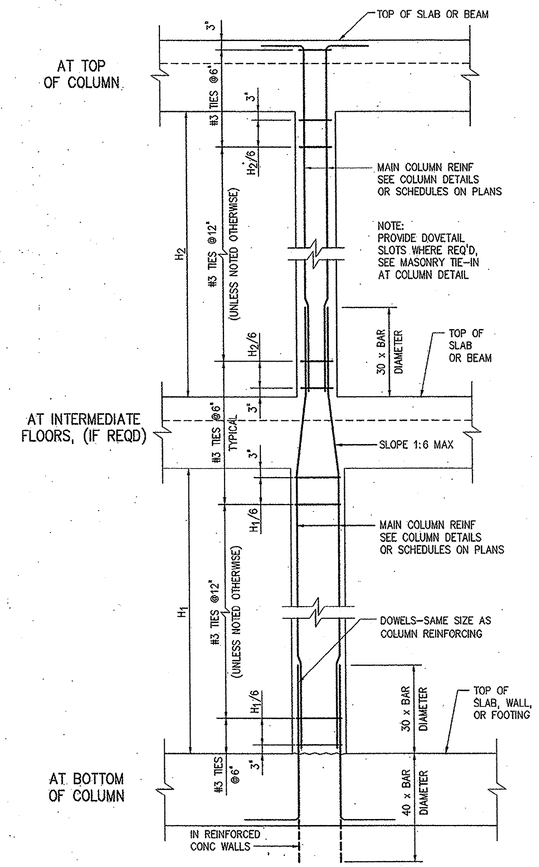

TYPICAL COLUMN ELEVATION

0331800

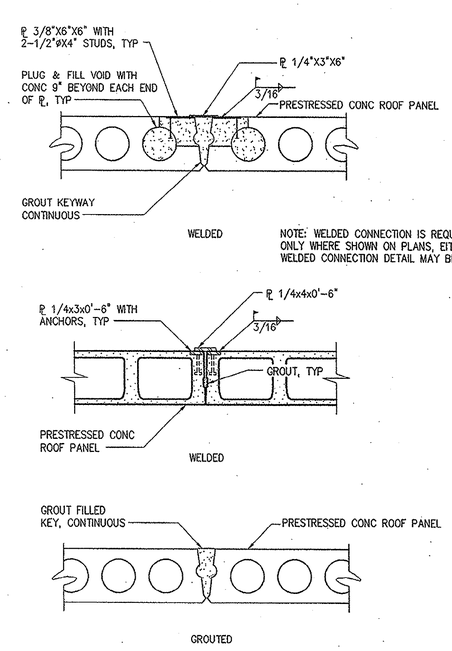

PRECAST PANEL CONNECTION

0341203

GENERAL CONCRETE NOTES:

1 CONCRETE PROTECTION FOR REINFORCING SHALL BE AS FOLLOWS UNLESS OTHERWISE NOTED ON THE DRAWINGS:
- A – CONCRETE DEPOSITED DIRECTLY AGAINST SOIL — 3"
- B – CONCRETE EXPOSED TO WEATHER (#5 OR SMALLER) — 1 1/2"
  (#6 OR LARGER) — 2"
- C – SLABS — 1 1/2"
  AT SURFACES CONTACTING WATER OR SEWAGE — 2"
- D – BEAMS AND COLUMNS (TO MAIN REINFORCEMENT) — 2"
  (TO COLUMN TIES OR STIRRUPS) — 1 1/2"
  SURFACES EXPOSED TO SEAWATER — 4"
- E – WALLS 12" OR MORE — 2"
  WALLS LESS THAN 12" (#5 OR SMALLER) — 1 1/2"
  (#6 OR LARGER) — 2"
  SURFACES EXPOSED TO SEAWATER — 3"
- F – FOR SURFACES EXPOSED TO WATER OR SEWAGE IN BEAMS, COLUMNS AND WALLS ADD 1/2" TO ABOVE.

2 SPLICES SHALL BE CLASS "B" CONFORMING TO THE PROVISIONS OF ACI 318 UNLESS NOTED OTHERWISE.

3. ALL EMBEDDED ITEMS SHALL BE INSTALLED AND SECURED IN PLACE BEFORE CONCRETE PLACEMENT. CONSULT ELECTRICAL, MECHANICAL AND HVAC DRAWINGS FOR PIPING, EMBEDDED ITEMS AND OPENINGS.

4 ALL JOINTS IN WATER BEARING STRUCTURES SHALL HAVE A WATERSTOP. ALL JOINTS BELOW GRADE IN WALLS OR SLABS WHICH ENCLOSE AN ACCESSIBLE AREA SHALL HAVE WATERSTOPS.

5 CONSTRUCTION JOINTS NOT SHOWN SHALL BE SUBMITTED BY THE CONTRACTOR FOR THE APPROVAL OF THE ENGINEER PRIOR TO SUBMITTING REBAR SHOP DRAWINGS.

6 PROVIDE VERTICAL CONSTRUCTION JOINTS IN WALLS AND HORIZONTAL JOINTS IN SLABS NOT GREATER THAN 45'-0" ON CENTER.

7 NO BACKFILL SHALL BE PLACED AGAINST ANY SUBSTRUCTURE WALLS UNLESS ADJACENT FLOOR SLABS HAVE TAKEN THEIR FINAL SET, OR WALLS HAVE BEEN PROPERLY BRACED, AND IN ANY CASE NOT SOONER THAN 28 DAYS AFTER THE PLACING OF CONCRETE UNLESS APPROVED BY THE ENGINEER.

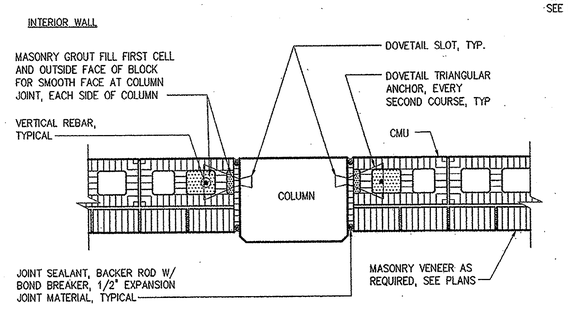

MASONRY TIE-IN AT COLUMN

0417001

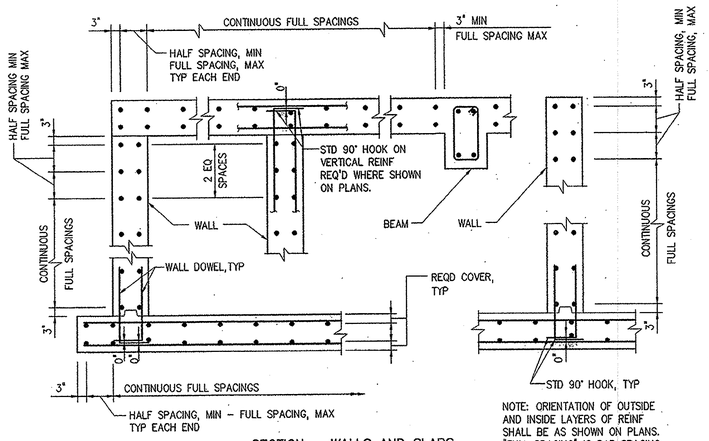

SECTION – WALLS AND SLABS

NOTE: ORIENTATION OF OUTSIDE AND INSIDE LAYERS OF REINF SHALL BE AS SHOWN ON PLANS. "FULL SPACING" IS BAR SPACING CALLED OUT ON PLANS.

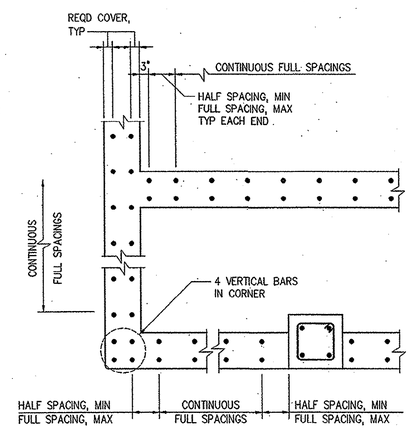

PLAN – WALLS

TYPICAL BAR PLACEMENT

0331704

BASIC DEVELOPMENT LENGTH AND SPLICE LENGTH

FOR BARS IN COMPRESSION

fy = 60,000 psi fc' = 4000 psi OR GREATER

BASIC DEVELOPMENT LENGTH		BAR SIZE	SPLICE LENGTH	
BASIC	CONFINEMENT *		BASIC	CONFINEMENT *
8"	8"	# 3	12"	12"
10"	8"	# 4	1'-3"	12"
1'-0"	9"	# 5	1'-7"	1'-3"
1'-3"	1'-0"	# 6	1'-11"	1'-6"
1'-5"	1'-1"	# 7	2'-3"	1'-9"
1'-7"	1'-3"	# 8	2'-6"	1'-11"
1'-10"	1'-4"	# 9	2'-10"	2'-2"
2'-1"	1'-7"	# 10	3'-3"	2'-6"
2'-3"	1'-8"	# 11	3'-7"	2'-9"

* BAR ENCLOSED WITHIN SPIRALS OF NOT LESS THAN 1/4 INCH DIAMETER AND NOT MORE THAN 4 INCH PITCH OR WITHIN #4 TIES IN CONFORMANCE WITH ACI 318. SECTION 7.10.5 AT NOT MORE THAN 4 INCHES ON CENTER, FACTOR 0.75 USED.

DEVELOPMENT LENGTH OF STANDARD HOOKS

FOR BARS IN TENSION

fy = 60,000 psi fc' = 4000 psi OR GREATER

BAR SIZE	DEVELOPMENT LENGTH, ℓdh	
	BASIC	W/ CONC COVER *
#3	8"	6"
#4	10"	7"
#5	1'-0"	9"
#6	1'-3"	11"
#7	1'-5"	1'-0"
#8	1'-7"	1'-2"
#9	1'-10"	1'-4"
#10	2'-1"	1'-6"
#11	2'-3"	1'-7"

* SIDE COVER NORMAL TO PLANE OF HOOK AT LEAST 2 1/2" ; AND FOR 90° HOOK END COVER BEYOND OUTSIDE END OF HOOK AT LEAST 2".

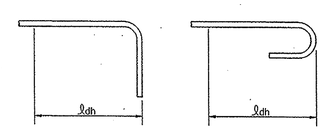

BASIC DEVELOPMENT LENGTH AND SPLICE LENGTH

FOR BARS IN TENSION

fy = 60,000 psi fc' = 4000 psi OR GREATER, NORMAL WEIGHT CONCRETE

BASIC DEVELOPMENT LENGTH ** ℓd				BAR SIZE	CLASS B SPLICE LENGTH ** 1.3 xℓ d			
CLEAR SPACING ≥ 3"		CLEAR SPACING < 3"			CLEAR SPACING ≥ 3"		CLEAR SPACING < 3"	
BASIC	TOP *	BASIC	TOP *		BASIC	TOP *	BASIC	TOP *
1'-0"	1'-0"	1'-0"	1'-4"	# 3	1'-0"	1'-3"	1'-4"	1'-8"
1'-0"	1'-3"	1'-7"	2'-1"	# 4	1'-3"	1'-8"	2'-1"	2'-8"
1'-3"	1'-7"	2'-4"	3'-0"	# 5	1'-7"	2'-0"	3'-0"	3'-11"
1'-5"	1'-11"	3'-1"	4'-0"	# 6	1'-11"	2'-5"	4'-0"	5'-2"
2'-5"	3'-1"	4'-11"	6'-4"	# 7	3'-1"	4'-0"	6'-4"	8'-3"
3'-0"	3'-11"	6'-0"	7'-9"	# 8	3'-11"	5'-1"	7'-9"	10'-1"
3'-8"	4'-9"	6'-8"	8'-8"	# 9	4'-9"	6'-2"	8'-8"	11'-4"
4'-5"	5'-8"	7'-5"	9'-8"	# 10	5'-8"	7'-5"	9'-8"	12'-7"
5'-2"	6'-8"	8'-2"	10'-8"	# 11	6'-8"	8'-8"	10'-8"	13'-10"

* TOP REINFORCEMENT IS HORIZONTAL REINFORCEMENT SO PLACED THAT MORE THAN 12 INCHES OF FRESH CONCRETE IS CAST IN THE MEMBER BELOW THE REINFORCEMENT.

** LENGTHS SHOWN IN CHART SHALL BE MODIFIED WHERE REQUIRED TO CONFORM TO THE PROVISIONS OF ACI 318, SECTION 12.2.

NO.	ISSUED FOR	DATE	BY
2	CONSTRUCTION	11/16/01	JBM
1	REGULATORY APPROVAL	8-31-01	JBM

DESIGNED H & S
DRAWN H & S
CHECKED JBM
PROJ. ENGR. JBM
APPROVED JBM

SOUTH CAROLINA PROFESSIONAL ENGINEER No.16512 RONALD L. TAYLOR 11/16/01

SOUTH CAROLINA REGISTERED PROFESSIONAL ENGINEER No.10488 JOSEPH B. MEEKS 11/16/01

HAZEN AND SAWYER
Environmental Engineers & Scientists
4011 WestChase Blvd, Raleigh, North Carolina 27607

GRAND STRAND WATER AND SEWER AUTHORITY
SOUTH CAROLINA

CONWAY WWTP
4.0 MGD EXPANSION AND UPGRADE

MISCELLANEOUS STANDARD DETAILS

THE SCALE BAR SHOWN BELOW MEASURES ONE INCH LONG ON THE ORIGINAL DRAWING.

DATE AUGUST 2001
H & S JOB NUMBER 30631
CONTRACT NUMBER 1
DRAWING NUMBER D6
H&S FLAT FILE NO. 56

06/10/01 11:12am FILE= H:\30631\DETAILS\D04 by EWNG XREFs=0251300, 0251000, 0251301, 0260100, 0260101, 0260102, 0264000, 0260100, 0245100, 0245000, 0245001, MISC\30631-TB,

35-009-049

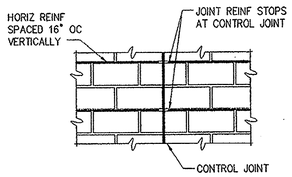

NOTE: CONTROL JOINTS MAY BE OFFSET A MAXIMUM DISTANCE OF 8". CROSS WIRES WITHIN THIS OFFSET SHALL BE CUT.

ELEVATION

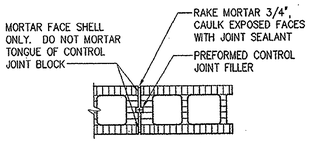

PLAN

NOTE: WIDE FLANGED PREFORMED CONTROL JOINT FILLER MAY BE USED IN LIEU OF DETAIL SHOWN

CONTROL JOINT BLOCK

0418000

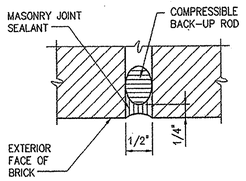

BRICK EXPANSION JOINT

0418001

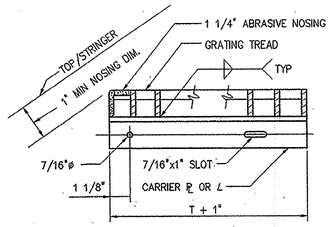

TYP TREAD DETAIL

0551000

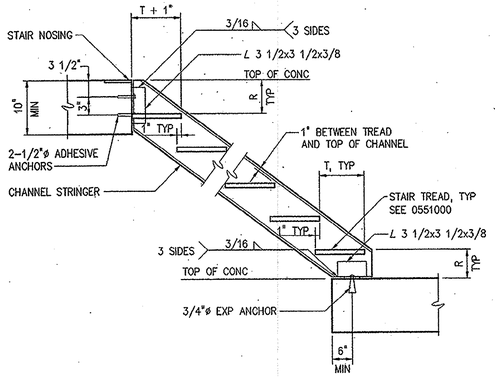

TYPICAL METAL STAIRS

0551001

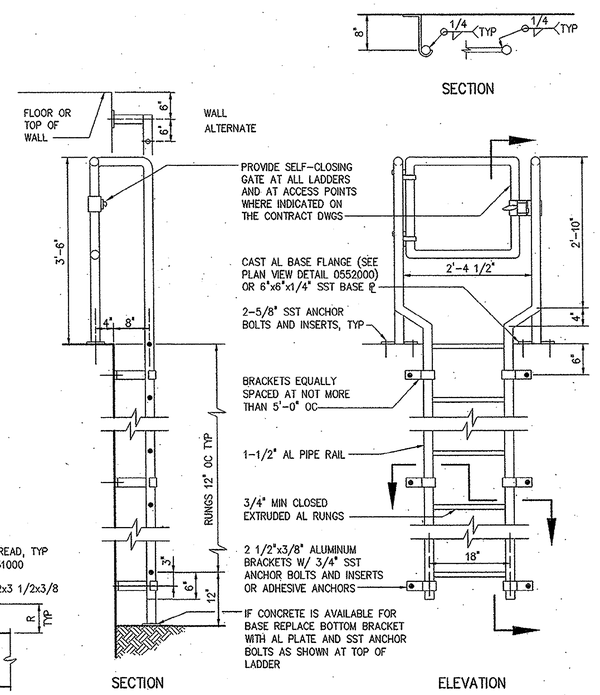

ALUMINUM LADDER

0551500

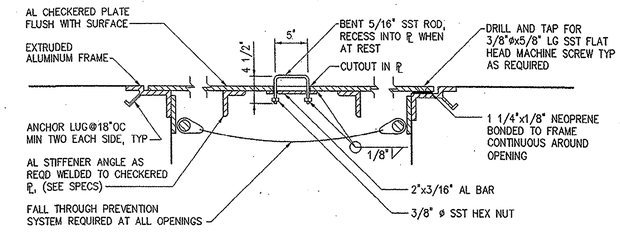

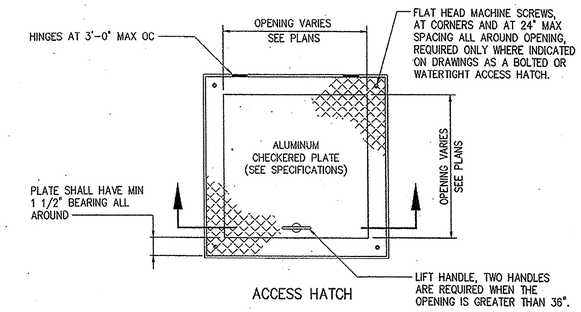

ACCESS HATCH

0553010

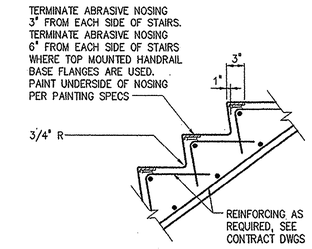

STAIR NOSING

0554000

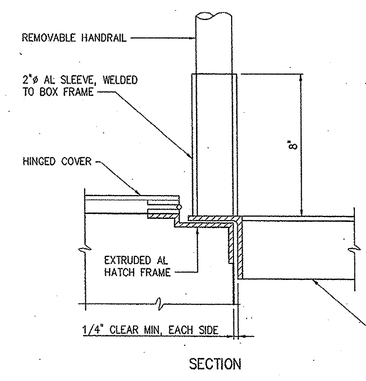

SECTION

SPAN, S	DEPTH (MIN)	CONCRETE ANCHOR (SIZE AND SPACING)
0'-0" < S ≤ 4'-0"	1 1/2"	1/2"øx5 1/2" @ 18"
4'-0" < S ≤ 5'-0"	1 3/4"	5/8"øx6" @ 18"
5'-0" < S ≤ 5'-6"	2"	
5'-6" < S ≤ 6'-0"	2 1/4"	
6'-0" < S ≤ 6'-6"	2 1/2"	

SCHEDULE BASED ON 150 PSF

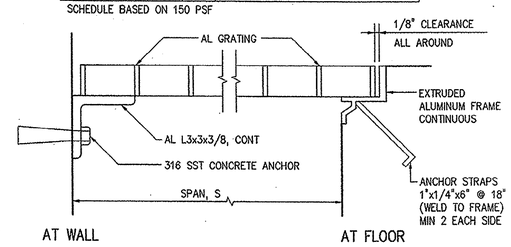

ALUMINUM GRATING

0553000

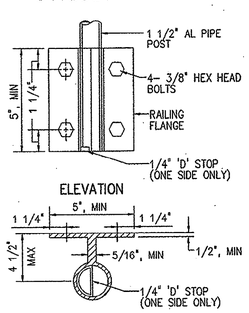

SIDE MOUNT TO METAL

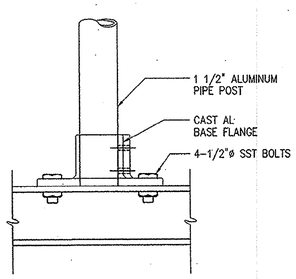

SURFACE MOUNTED TO METAL

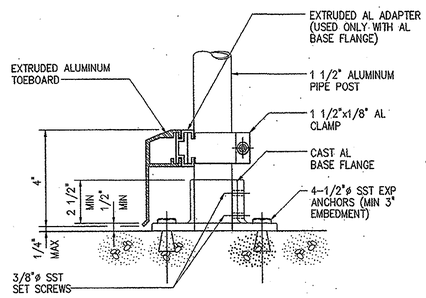

SURFACE MOUNTED TO CONCRETE

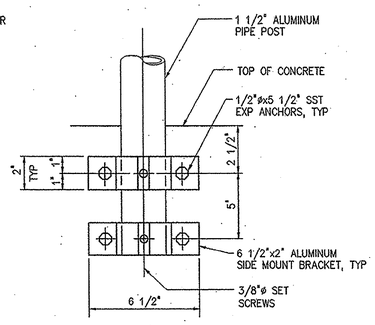

SIDE MOUNT TO CONCRETE

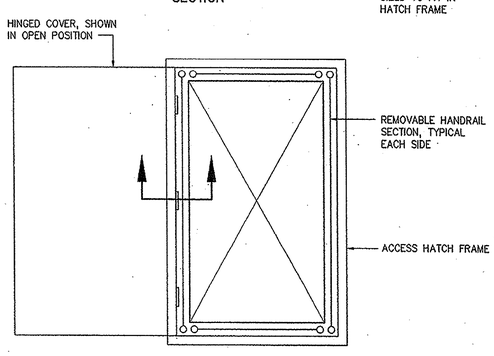

PLAN

REMOVABLE SAFETY RAIL AT ACCESS OPENING

0552004

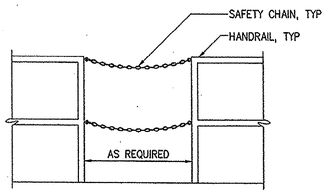

HANDRAIL SAFETY CHAIN GATE

0552001

NOTE: UNLESS SHOWN OTHERWISE ON THE CONTRACT DRAWING, HANDRAILS SHALL BE TYPE I.

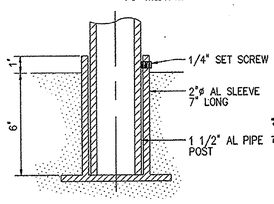

REMOVABLE POST IN CONCRETE

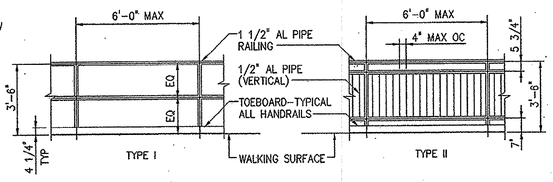

ELEVATION

ALUMINUM HANDRAILS

0552000

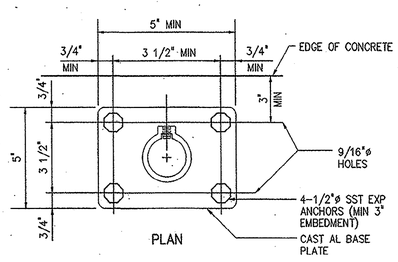

PLAN

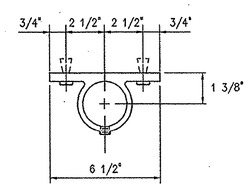

PLAN

NO.	ISSUED FOR	DATE	BY
2	CONSTRUCTION	11/16/01	JBM
1	REGULATORY APPROVAL	8-31-01	JBM

DESIGNED H & S
DRAWN H & S
CHECKED JBM
PROJ. ENGR. JBM
APPROVED JBM

SOUTH CAROLINA REGISTERED PROFESSIONAL ENGINEER No. 16512 RONALD L. TAYLOR 11/16/01

SOUTH CAROLINA REGISTERED PROFESSIONAL ENGINEER No. 10488 JOSEPH B. MEEKS 11/16/01

HAZEN AND SAWYER
Environmental Engineers & Scientists
4011 WestChase Blvd, Raleigh, North Carolina 27607

GRAND STRAND WATER AND SEWER AUTHORITY
SOUTH CAROLINA

CONWAY WWTP
4.0 MGD EXPANSION AND UPGRADE

MISCELLANEOUS STANDARD DETAILS

THE SCALE BAR SHOWN BELOW MEASURES ONE INCH LONG ON THE ORIGINAL DRAWING.

DATE AUGUST 2001
H & S JOB NUMBER 30631
CONTRACT NUMBER 1
DRAWING NUMBER D7
H&S FLAT FILE NO. 56

08/16/01 11:13am FILE= H:\30631\DETAIL3\D07 by EWHO XREFs=0559000, 0559001, 0551500, 0552000, 0552002, 0553000, 0553010, 0554000, 0418000, 0418001, 0552004, MISC\30631-TB.

35-004-050

NOTES:

1. ALL WALL PIPES SHALL BE CAST UNLESS OTHERWISE NOTED.
2. PROVIDE PIPE JOINT WITHIN TWO (2) FEET OF EXTERIOR FACE OF WALL AT CONNECTION TO ALL NEW AND EXISTING STRUCTURES OR MANHOLES.
3. COMBINATION WATERSTOP SHALL BE REQUIRED AT ALL NEW PIPE PENETRATIONS THROUGH EXISTING CONCRETE WALLS UNLESS OTHERWISE INDICATED ON THE CONTRACT DRAWINGS. SEE COMBINATION WATERSTOP DETAIL 1509222.
4. ALL NEW OPENINGS IN EXISTING CONCRETE WALLS SHALL BE ACCOMPLISHED WITH A CLEAN SAW-CUT. SURFACES SHALL BE ROUGHENED BY APPROVED METHODS.

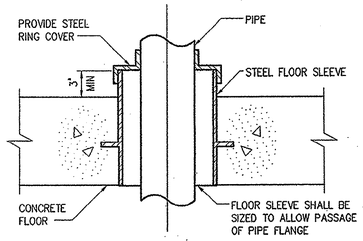

FLOOR PENETRATION
1509200

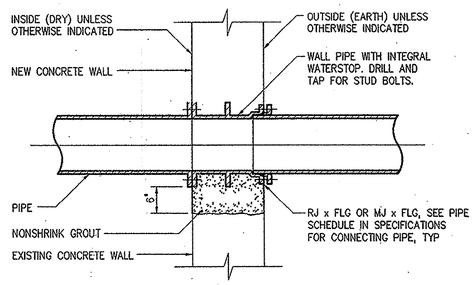

1509203

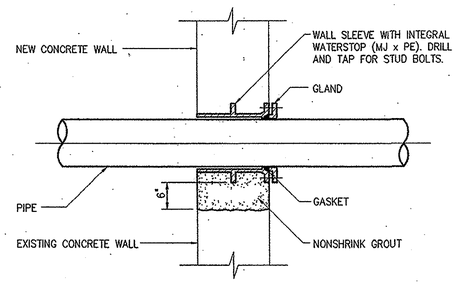

1509206

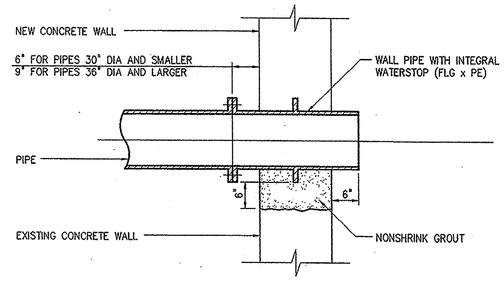

1509209

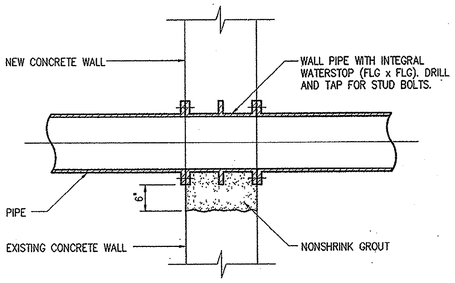

1509201

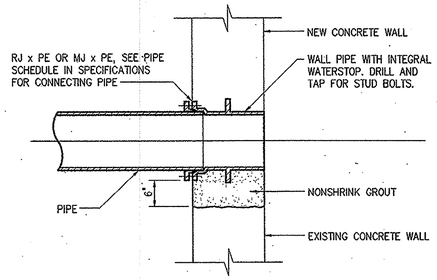

1509204

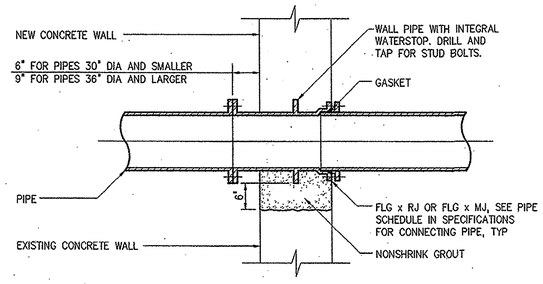

1509207

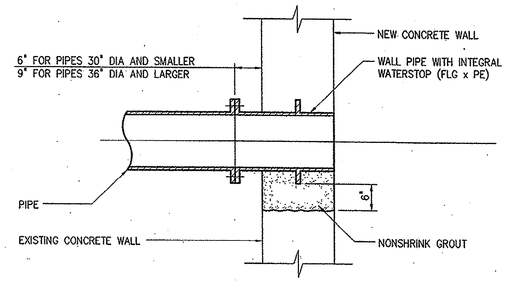

1509210

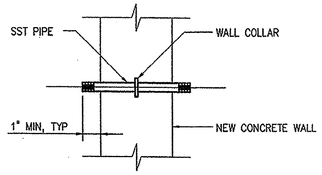

1509212

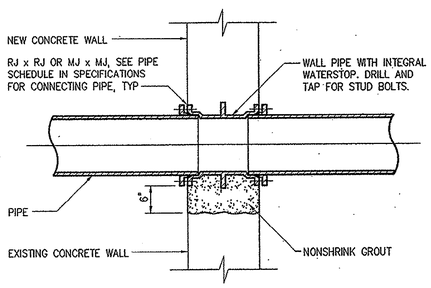

1509202

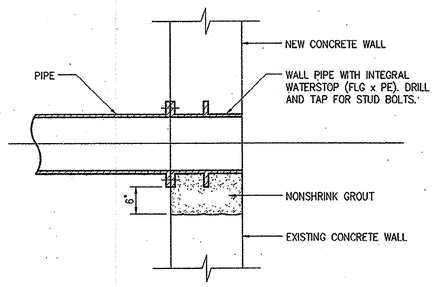

1509205

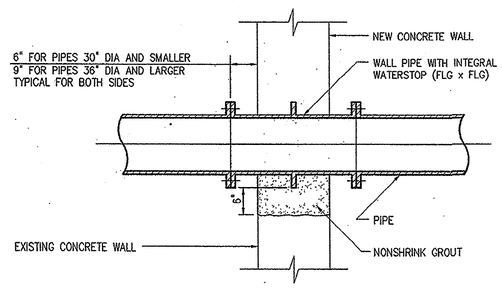

1509208

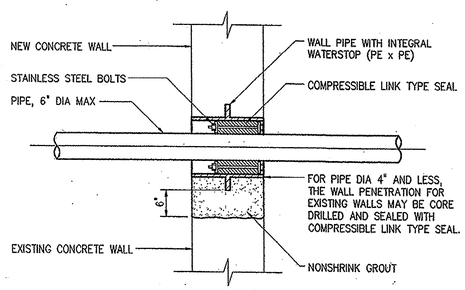

1509211

NO.	ISSUED FOR	DATE	BY
2	CONSTRUCTION	11/16/01	JBM
1	REGULATORY APPROVAL	8-31-01	JBM

DESIGNED H & S
DRAWN H & S
CHECKED JBM
PROJ. ENGR. JBM
APPROVED JBM

SOUTH CAROLINA REGISTERED PROFESSIONAL ENGINEER No. 16512 RONALD L. TAYLOR 11/16/01

SOUTH CAROLINA REGISTERED PROFESSIONAL ENGINEER No. 10488 JOSEPH B. MEEKS 11/16/01

HAZEN AND SAWYER
Environmental Engineers & Scientists
4011 WestChase Blvd, Raleigh, North Carolina 27607

GRAND STRAND WATER AND SEWER AUTHORITY
SOUTH CAROLINA

CONWAY WWTP
4.0 MGD EXPANSION AND UPGRADE

MISCELLANEOUS STANDARD DETAILS

THE SCALE BAR SHOWN BELOW MEASURES ONE INCH LONG ON THE ORIGINAL DRAWING.

DATE AUGUST 2001
H & S JOB NUMBER 30631
CONTRACT NUMBER 1
DRAWING NUMBER D8
H&S FLAT FILE NO. 56

08/16/01 11:13am FILE= H:\30631\DETAILS\d08 by CHHC XREFs=1509201, 1509202, 1509203, 1509204, 1509205, 1509206, 1509207, 1509208, 1509209, 1509210, 1509211, 1509212, 1509200, MISC\30631-TB,

35-004-051

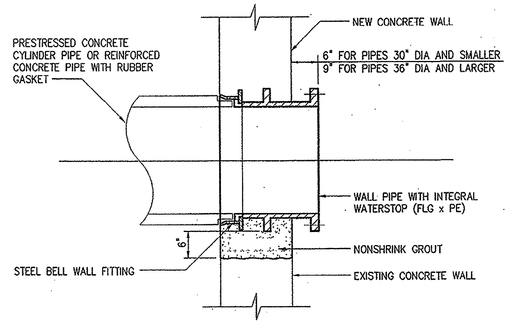

1509213

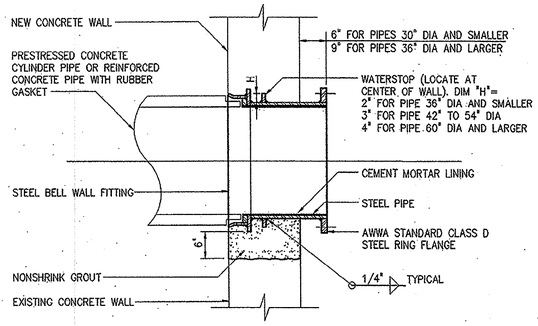

1509226

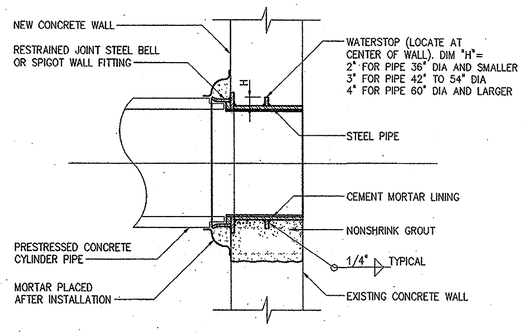

1509229

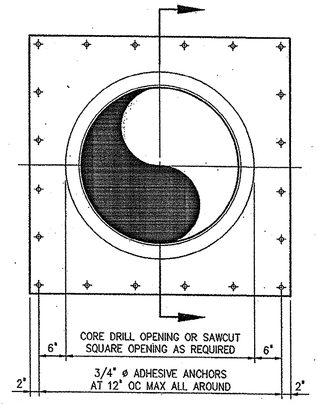

ELEVATION

NOTES:

1. ALL WALL PIPES SHALL BE CAST UNLESS OTHERWISE NOTED.
2. PROVIDE PIPE JOINT WITHIN TWO (2) FEET OF EXTERIOR FACE OF WALL AT CONNECTION TO ALL NEW AND EXISTING STRUCTURES OR MANHOLES.
3. COMBINATION WATERSTOP SHALL BE REQUIRED AT ALL NEW PIPE PENETRATIONS THROUGH EXISTING CONCRETE WALLS UNLESS OTHERWISE INDICATED ON THE CONTRACT DRAWINGS. SEE COMBINATION WATERSTOP DETAIL 1509222.
4. ALL NEW OPENINGS IN EXISTING CONCRETE WALLS SHALL BE ACCOMPLISHED WITH A CLEAN SAW-CUT. SURFACES SHALL BE ROUGHENED BY APPROVED METHODS.

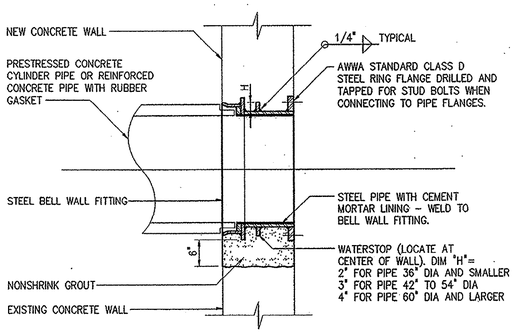

1509214

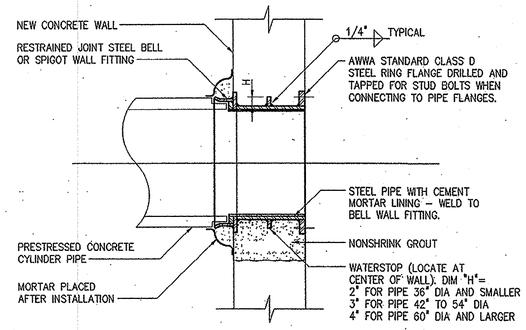

1509227

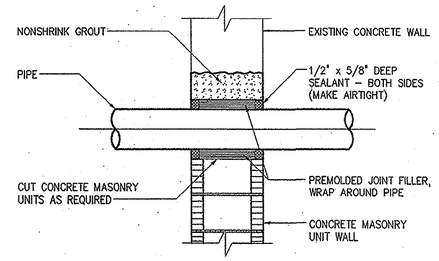

CAULKED WALL PENETRATION

1509217

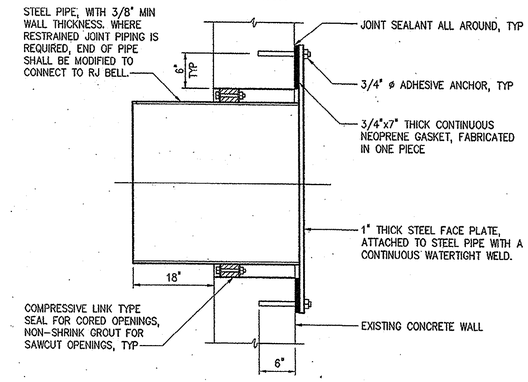

SECTION

1509230

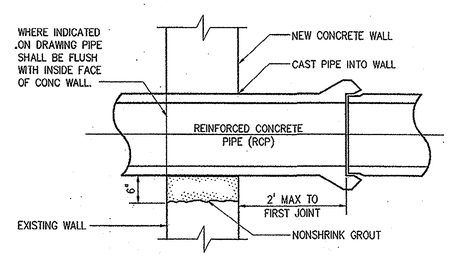

REINFORCED CONCRETE PIPE WALL PENETRATION

1509218

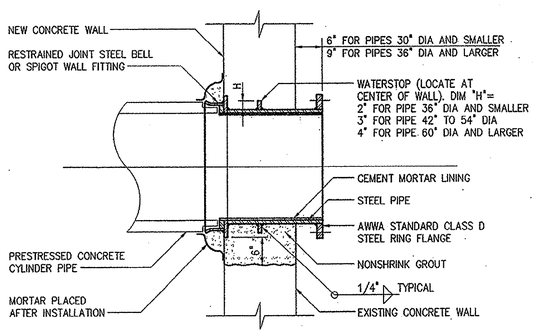

1509215

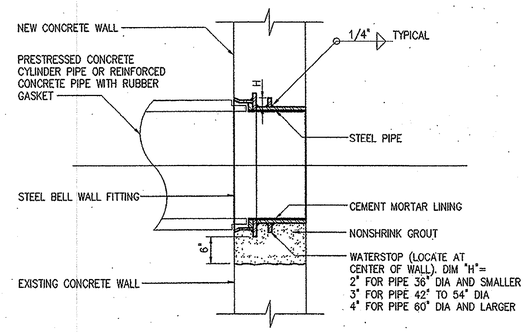

1509228

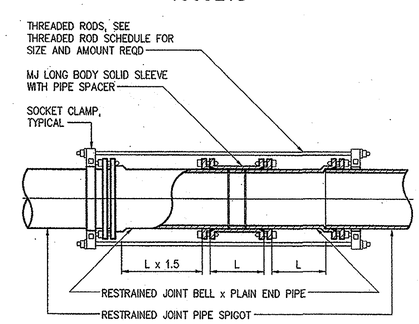

RESTRAINED MJ SOLID SLEEVE

1509221

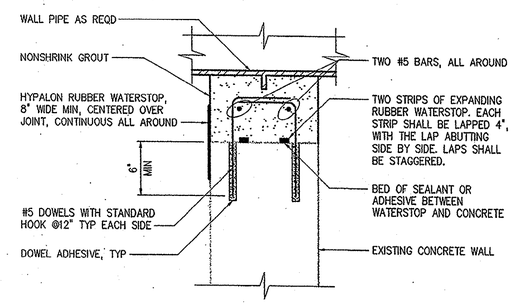

NOTES: ALL OPENINGS SHALL BE SAWCUT OR (SINGLE) CORE DRILLED AS REQUIRED. USE OF JACKHAMMERS OR STITCH DRILLING IS NOT PERMITTED. THE PERIMETER SURFACE OF THE OPENING SHALL BE SMOOTH.

HYPALON RUBBER WATERSTOP IS REQUIRED ON WET SIDE WHEN WALL HAS HYDRAULIC LOADING ON ONE SIDE, WATERSTOP IS REQUIRED ON BOTH SIDES WHEN WALL HAS POTENTIAL HYDRAULIC LOADING ON EITHER OR BOTH SIDES.

COMBINATION WATERSTOP

1509222

NO.	ISSUED FOR	DATE	BY
2	CONSTRUCTION	11/13/01	JBM
1	REGULATORY APPROVAL	8-31-01	JBM

DESIGNED H&S
DRAWN H&S
CHECKED JBM
PROJ. ENGR. JBM
APPROVED

SOUTH CAROLINA REGISTERED PROFESSIONAL ENGINEER No. 16512 RONALD L. TAYLOR 11/13/01

SOUTH CAROLINA REGISTERED PROFESSIONAL ENGINEER No. 10488 JOSEPH B. MEEKS 11/16/01

HAZEN AND SAWYER
Environmental Engineers & Scientists
4011 WestChase Blvd, Raleigh, North Carolina 27607

GRAND STRAND WATER AND SEWER AUTHORITY
SOUTH CAROLINA

CONWAY WWTP
4.0 MGD EXPANSION AND UPGRADE

MISCELLANEOUS STANDARD DETAILS

THE SCALE BAR SHOWN BELOW MEASURES ONE INCH LONG ON THE ORIGINAL DRAWING.

DATE AUGUST 2001
H & S JOB NUMBER 30631
CONTRACT NUMBER 1
DRAWING NUMBER D9
H&S FLAT FILE NO. 56

08/10/01 11:14am FILE= H:\30631\DETAILS\D09 by EMIC XREFs=1509217, 1509218, 1509221, 1509226, 1509227, 1509228, 1509229, 1509213, 1509214, 1509215, 1509230, 1509222, MISC\30631-1B,

35-004-052

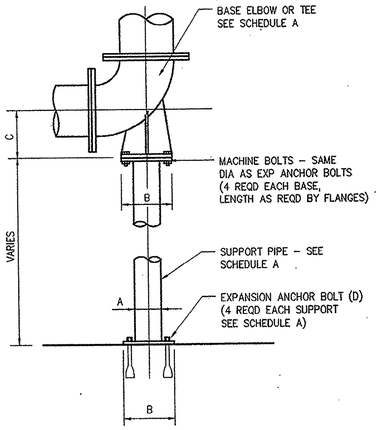

BASE ELBOW (TEE)

1509400

SCHEDULE A				
BASE ELBOW (TEE) (DIM IN INCHES)				
PIPE SIZE	A	B	C	D DIA x LG
3	1 1/2	5	4 7/8	1/2 x 5
4	2	6	5 1/2	5/8 x 5
5–6	2 1/2	7	VARIES	5/8 x 5
8–10	4	9	VARIES	5/8 x 5
12–16	6	11	VARIES	3/4 x 6
18–24	8	13 1/2	VARIES	3/4 x 6
30	10	16	23	7/8 x 7
36	12	19	26	7/8 x 7

SCHEDULE B				
ADJUSTABLE SADDLE (DIM IN INCHES)				
PIPE SIZE	A	B	C	D DIA x LG
3	2 1/2	7	1 1/2	5/8 x 5
4–12	3	7 1/2	2 1/2	5/8 x 5
14–16	4	9	3	5/8 x 5
18–20	6	11	3 1/2	3/4 x 6
24–36	6	11	4	3/4 x 6

SCHEDULE C							
SUPPORT RODS AND BRACKET SPACING (FOR STANDARD WEIGHT PIPE)							
PIPE SIZE (INCHES)	BACK PLATE (INCHES)	MINIMUM ROD ø (INCHES)		MAX SPAN IN FEET (SEE NOTE 8)			
		PROCESS PIPING	STEEL AIR PIPING	COPPER	PLASTIC	STEEL	DIP (SEE NOTE 7)
UP TO 1	SEE NOTE 4	3/8	3/8	5	5	6	–
1 1/4–2	"	3/8	3/8	8	5	10	–
2 1/2–3 1/2	"	3/8	3/8	8	5	12	6
4–5	"	1/2	3/8	–	5	14	8
6	"	5/8	3/8	–	5	15	9
8–12	"	3/4	1/2	–	5	15	9
14–16	"	7/8	1/2	–	5	15	9
18	"	1	1/2	–	5	18	10
20–24	"	1 1/4	5/8	–	5	18	10

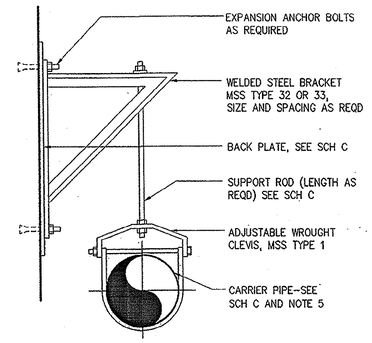

PIPE SUPPORT BRACKET

1509407

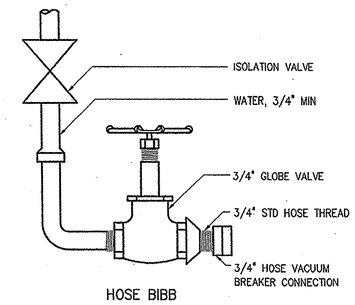

HOSE BIBB

1511500

NOTES:

1. MSS REFERS TO THE MANUFACTURERS STANDARDIZATION SOCIETY OF THE VALVE AND FITTINGS INDUSTRY, STANDARD PRACTICE SP–58 AND SP–69.
2. PIPE WALL SUPPORT AND PIPE SUPPORT RACK SHALL BE ASSEMBLED WITH CHANNEL FRAMES AND ACCESSORIES AS MANUFACTURED BY UNISTRUT CORP, OR VERSABAR CORP, OR EQUAL.
3. FABRICATED PIPE SUPPORT MAY BE USED AS SHOWN IN PIPE SUPPORT RACK DETAIL, OR TO TO SUPPORT PIPE FROM THE FLOOR.
4. BACK PLATES SHALL BE DESIGNED BY THE CONTRACTOR ACCORDING TO WALL TYPES AND THE WEIGHTS INVOLVED. BACK PLATE TO BE SUPPLIED BY BRACKET MANUFACTURER.
5. PIPE HANGERS, SUPPORTS AND BRACKETS ARE SHOWN HERE IN VARIOUS COMBINATIONS AS GENERAL DETAILS. THE CONTRACTOR SHALL DESIGN THE SUPPORT SYSTEM BASED ON ACTUAL WEIGHTS AND CONDITIONS AS SPECIFIED OR AS SHOWN ON THE CONTRACT DRAWINGS.
6. ALL INSULATED PIPES SHALL USE A SHIELD (MSS TYPE 40) WITH THE APPLICABLE PIPE SUPPORT.
7. MINIMUM OF ONE HANGER PER PIPE SECTION, CLOSE TO JOINT, ON THE BARREL. ALSO AT CHANGE IN DIRECTION AND BRANCH CONNECTIONS.
8. RODS AND SPACING ARE BASED ON STANDARD WEIGHT MATERIALS ACCORDING TO MSS SP–69. AND ARE FOR REFERENCE ONLY. THE CONTR SHALL SPACE HIS HANGERS BASED ON ACTUAL CONDITIONS.

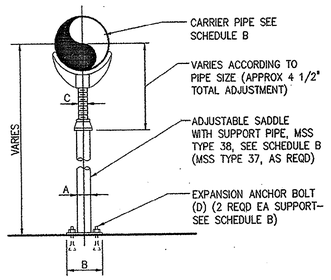

ADJUSTABLE SADDLE

1509405

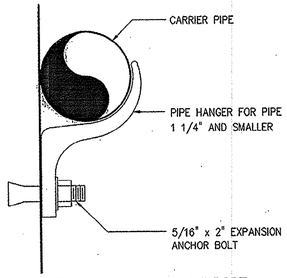

WALL HANGER PIPE SUPPORT

1509403

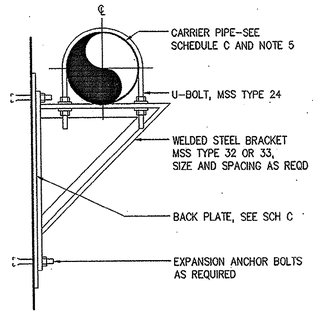

PIPE SUPPORT BRACKET

1509404

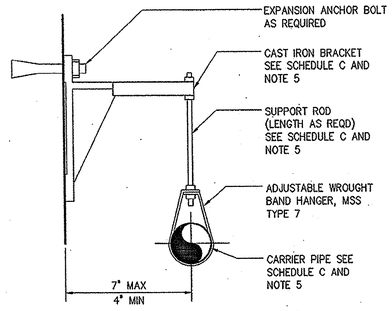

PIPE SUPPORT BRACKET

1509406

SCHEDULE D											
TRAPEZE SUPPORT (DIM. IN INCHES)											
PIPE SIZE	STEEL TUBE SUPPORT BEAM VERT. x HOR.	MINIMUM ROD ø (INCHES)		WASHER PLATE	BASE PLATE			WELD	EXP. ANCHOR DIA. x LENGTH	MAX. SUPPORT SPACING IN FEET (SEE NOTE 8)	
		PROCESS PIPING	STEEL AIR PIPING		A	B	C	D		PROCESS PIPING	STEEL AIR PIPING
12–14	4x4x3/8	1/2	1/2	4x4x1/4	1	10	3/8	3/16	1/2 x 4	10	15
16–24	4x4x3/8	3/4	5/8	4x4x3/8	1	10	1/2	3/16	5/8 x 5	10	15
30–36	6x4x3/8	1	3/4	4x4x1/2	2	12	1/2	1/4	3/4 x 6	10	20
42	6x4x3/8	1 1/4	3/4	5x5x1/2	2	12	3/4	1/4	7/8 X 6	10	25
48	8x4x3/8	1 1/2	1	5x5x3/4	2	12	1	1/4	1 X 7	10	30

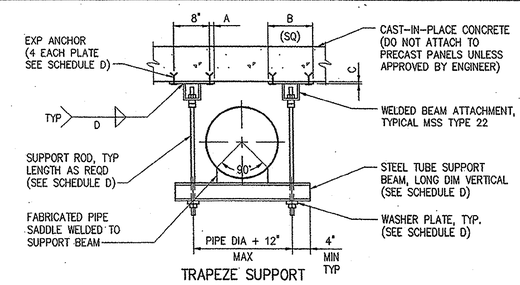

TRAPEZE SUPPORT

1509413

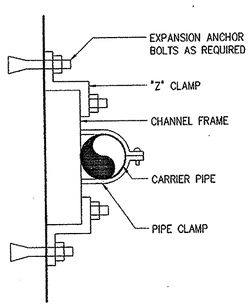

PIPE WALL SUPPORT AND SUPPORT RACK SHALL BE ASSEMBLED W/ CHANNEL FRAMES AND ACCESSORIES AS MANUFACTURED BY UNISTRUT CORP OR EQUAL

PIPE WALL SUPPORT

1509402

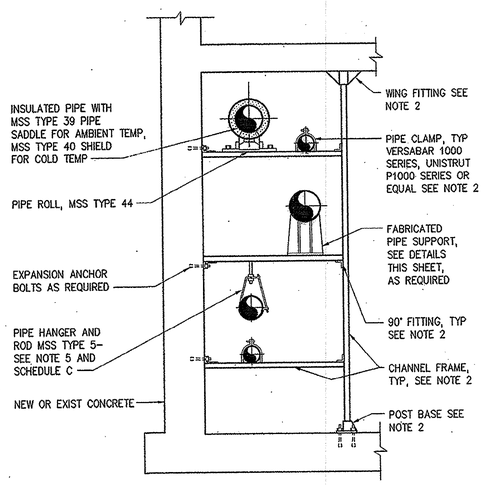

PIPE SUPPORT RACK

1509408

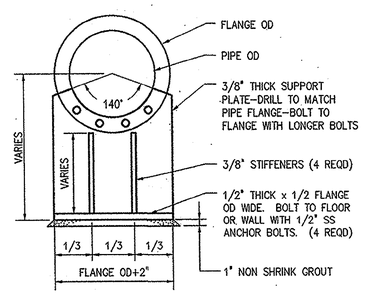

FABRICATED PIPE SUPPORT (AT FLANGE)

1509409

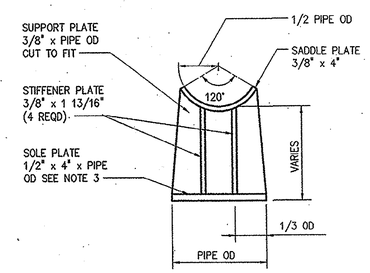

FABRICATED PIPE SUPPORT (AT PIPE)

1509410

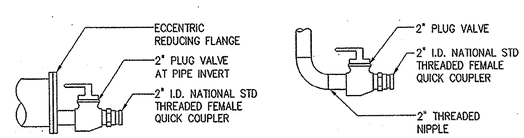

TYPE I TYPE II

FLUSHING CONNECTIONS

1511501

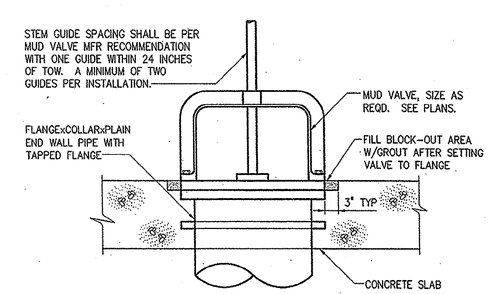

MUD VALVE INSTALLATION

1510401

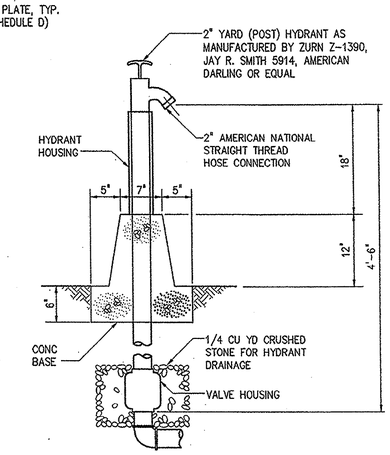

YARD HYDRANT

1511502

NO.	ISSUED FOR	DATE	BY
2	CONSTRUCTION	11/16/01	JBM
1	REGULATORY APPROVAL	8-31-01	JBM

DESIGNED H&S
DRAWN H&S
CHECKED JBM
PROJ. ENGR. JBM
APPROVED JBM

SOUTH CAROLINA PROFESSIONAL ENGINEER No.16572 RONALD L. TAYLOR 11/16/01

SOUTH CAROLINA REGISTERED PROFESSIONAL ENGINEER No.10488 JOSEPH B. MEEKS 11/16/01

HAZEN AND SAWYER
Environmental Engineers & Scientists
4011 WestChase Blvd, Raleigh, North Carolina 27607

GRAND STRAND WATER AND SEWER AUTHORITY
SOUTH CAROLINA

CONWAY WWTP
4.0 MGD EXPANSION AND UPGRADE

MISCELLANEOUS STANDARD DETAILS

THE SCALE BAR SHOWN BELOW MEASURES ONE INCH LONG ON THE ORIGINAL DRAWING.

DATE AUGUST 2001
H & S JOB NUMBER 30631
CONTRACT NUMBER 1
DRAWING NUMBER D10
H&S FLAT FILE NO. 56

35-004-053

08/10/01 11:14am FILE= H:\30631\DETAILS\D10 by ENNG XREFs=1509400, 1509401, 1509402, 1509403, 1509404, 1509405, 1509406, 1509407, 1509408, 1509409, 1509410, 1509411, 1509412, 1509413, 1510401, 1511500, 1511501, 1511502, MISC\30631-TB.

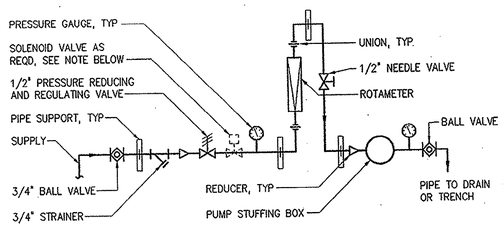

NOTE: SOLENOID VALVE SHALL BE PROVIDED AND INTERLOCKED WITH THE PUMP CONTROLS WHEN REQUIRED BY THE PUMP MANUFACTURER OR BY THE OWNER.

1513400

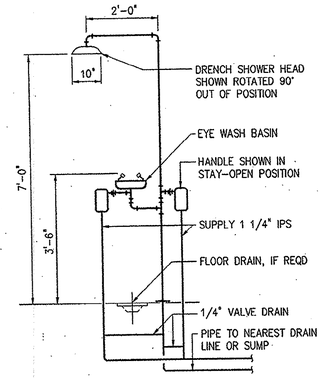

EMERGENCY SHOWER AND EYEWASH

1545100

THREADED ROD SCHEDULE

DESIGN PRESSURE (DIMENSIONS IN INCHES)

PIPE SIZE	50 PSI BOLTS NO-DIA	50 PSI TAB THK	100 PSI BOLTS NO-DIA	100 PSI TAB THK	150 PSI BOLTS NO-DIA	150 PSI TAB THK	200 PSI BOLTS NO-DIA	200 PSI TAB THK	250 PSI BOLTS NO-DIA	250 PSI TAB THK	300 PSI BOLTS NO-DIA	300 PSI TAB THK	350 PSI BOLTS NO-DIA	350 PSI TAB THK
4,6	2-3/4	1	2-3/4	1	2-3/4	1	2-3/4	1	2-3/4	1	2-3/4	1	2-3/4	1
8	2-3/4	1 1/4	2-3/4	1 1/4	2-3/4	1 1/4	2-3/4	1 1/4	2-3/4	1 1/4	4-3/4	1 1/4	4-3/4	1 1/4
10	2-3/4	1 1/4	2-3/4	1 1/4	2-3/4	1 1/4	4-3/4	1 1/4	4-3/4	1 1/4	4-3/4	1 1/4	4-3/4	1 1/4
12	2-3/4	1 1/4	2-3/4	1 1/4	4-3/4	1 1/4	4-3/4	1 1/4	6-3/4	1 1/4	6-3/4	1 1/4	6-3/4	1 1/4
14	2-3/4	1 1/2	4-3/4	1 1/2	4-3/4	1 1/2	4-3/4	1 1/2	6-3/4	1 1/2	4-3/4	1 1/2	4-3/4	1 1/2
16	2-3/4	1 1/2	4-3/4	1 1/2	6-3/4	1 1/2	4-3/4	1 1/2	4-3/4	1 1/2	4-3/4	1 1/2	6-3/4	1 1/2
18	2-3/4	1 3/4	4-3/4	1 3/4	6-3/4	1 3/4	4-3/4	1 3/4	6-3/4	1 3/4	6-3/4	1 3/4	6-3/4	1 3/4
20	4-3/4	1 3/4	4-3/4	1 3/4	4-3/4	1 3/4	4-3/4	1 3/4	6-3/4	1 3/4	6-3/4	1 3/4	8-3/4	1 3/4
24	4-3/4	2	6-3/4	2	6-3/4	2	6-3/4	2	8-3/4	2	10-3/4	2	10-3/4	2
30	4-1	2 1/4	4-1	2 1/4	4-1	2 1/4	6-1	2 1/4	8-1	2 1/4	10-1	2 1/4	10-1	2 1/4
36	4-1	2 1/2	4-1	2 1/2	8-1	2 1/2	8-1	2 1/2	10-1	2 1/2	12-1	2 1/2	14-1	2 1/2
42	4-1 1/4	2 3/4	4-1 1/4	2 3/4	6-1 1/4	2 3/4	8-1 1/4	2 3/4	10-1 1/4	2 3/4	12-1 1/4	2 3/4	12-1 1/4	2 3/4
48	6-1 1/4	2 3/4	4-1 1/4	2 3/4	6-1 1/4	2 3/4	8-1 1/4	2 3/4	12-1 1/4	2 3/4	12-1 1/4	2 3/4	14-1 1/4	2 3/4
54	6-1 1/4	3	6-1 1/4	3	8-1 1/4	3	8-1 1/4	3	14-1 1/4	3	16-1 1/4	3	18-1 1/4	3

1. THREADED RODS FOR ALL PIPE DIAMETERS IN THE SHADED AREA SHALL BE ASTM A193 (GRADE B7).
2. ALL OTHER THREADED RODS SHALL BE ASTM A36. ALL TABS SHALL BE ASTM A572 GR50.
3. ASTM A193 (GRADE B7) RODS SHALL BE LABELED AND BUNDLED SEPARATELY.
4. THIS SCHEDULE SHALL APPLY FOR HARNESSED FLANGED ADAPTERS, HARNESSED FLEXIBLE COUPLINGS AND ALL MECHANICAL JOINT COUPLINGS, SLEEVES ETC. THAT ARE REQUIRED TO BE HARNESSED.
5. RODS THREADED AT ENDS (INCLUDING NUTS) SHALL BE EQUALLY SPACED AROUND PIPE BETWEEN ALL MECHANICAL JOINT FITTINGS (TEE, VALVES, BEND, PLUG, ETC.) OR AS OTHERWISE SHOWN ON THE CONTRACT DRAWINGS. THREADED RODS SHALL BE AS SHOWN IN THE THREADED ROD SCHEDULE. SEE NOTE 6.
6. RODS, NUTS, ETC., IN CONTACT WITH SOIL SHALL BE PAINTED WITH TWO COATS COAL TAR (MIN 26 DRY MIL THICKNESS) TNEMEC 46-465 HI-BUILD OR EQUAL.

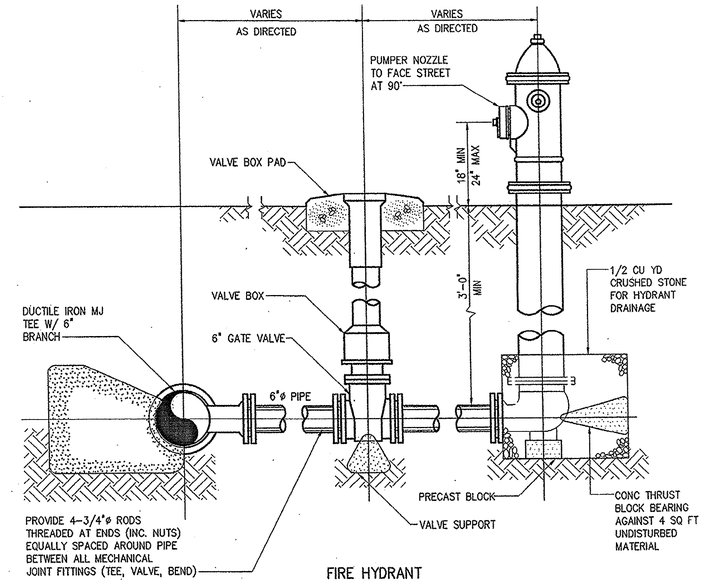

FIRE HYDRANT

1553000

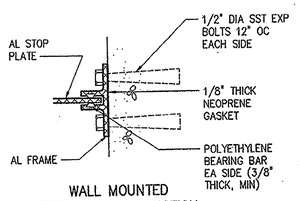

WALL MOUNTED
EXISTING CONSTRUCTION

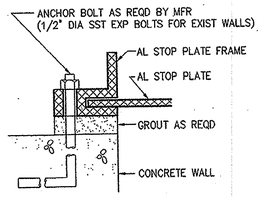

FACE MOUNTED

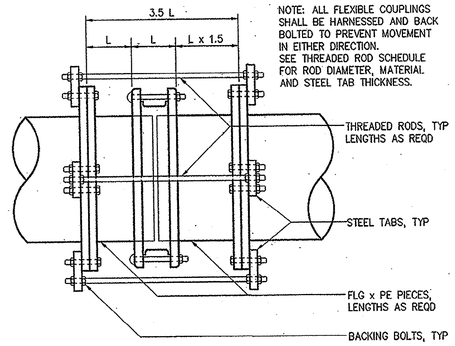

NOTE: ALL FLEXIBLE COUPLINGS SHALL BE HARNESSED AND BACK BOLTED TO PREVENT MOVEMENT IN EITHER DIRECTION. SEE THREADED ROD SCHEDULE FOR ROD DIAMETER, MATERIAL AND STEEL TAB THICKNESS.

HARNESSED FLEXIBLE COUPLING

1516400

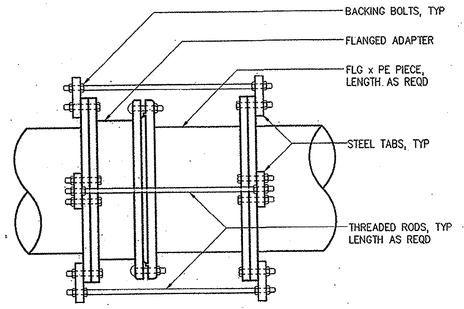

NOTE: ALL FLANGED ADAPTERS SHALL BE HARNESSED AND BACK BOLTED TO PREVENT MOVEMENT IN EITHER DIRECTION. SEE THREADED ROD SCHEDULE FOR ROD DIAMETER, MATERIAL AND STEEL TAB THICKNESS.

HARNESSED FLANGED ADAPTER

1516402

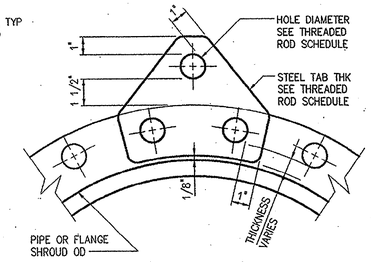

STEEL TAB

1516401

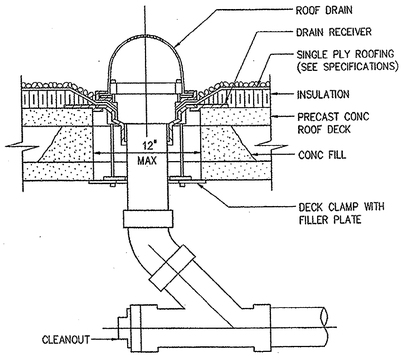

ROOF DRAIN

1542201

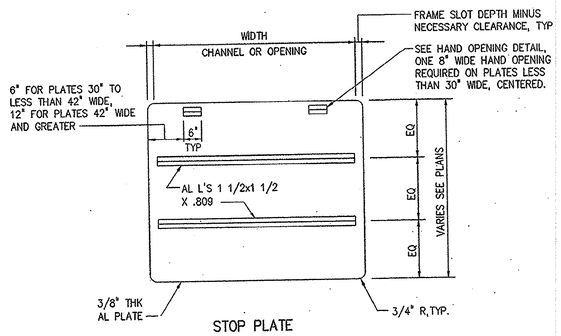

STOP PLATE

1513600

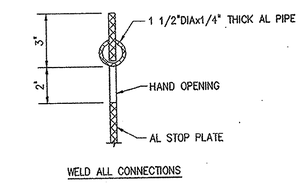

WELD ALL CONNECTIONS

HAND OPENING DETAIL

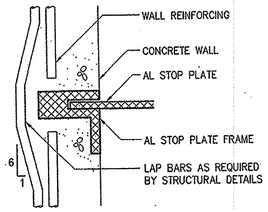

EMBEDDED STOP PLATE FRAME
NEW CONSTRUCTION

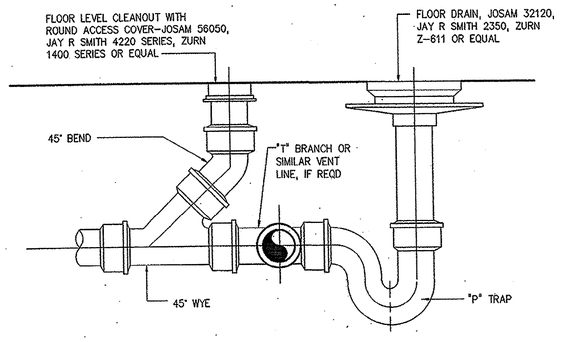

FLOOR DRAIN WITH CLEANOUT

1542100

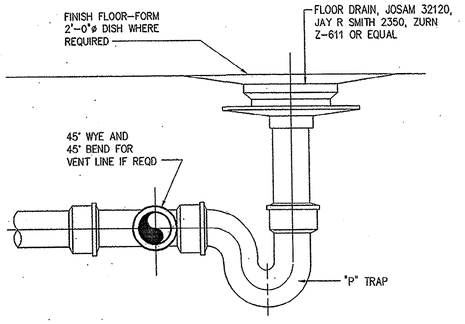

NOTE: INTERIOR FLOOR DRAIN AND CLEANOUTS TO HAVE NICKEL BRONZE TOPS. EXTERIOR FLOOR DRAINS AND CLEANOUTS TO HAVE LACQUERED CAST IRON TOPS.

FLOOR DRAIN

1542102

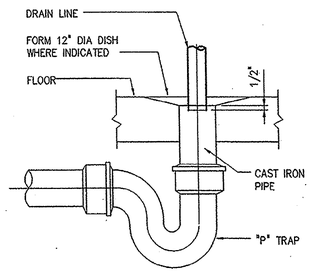

TYPICAL FLOOR DRAIN

1542101

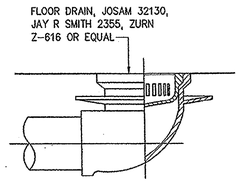

FLOOR DRAIN

1542103

NO.	ISSUED FOR	DATE	BY
2	CONSTRUCTION	11/16/01	JBM
1	REGULATORY APPROVAL	8-31-01	JBM

DESIGNED H & S
DRAWN H & S
CHECKED JBM
PROJ. ENGR. JBM
APPROVED JBM

SOUTH CAROLINA PROFESSIONAL ENGINEER REGISTERED No. 15612 RONALD L. TAYLOR 11/16/01

SOUTH CAROLINA REGISTERED PROFESSIONAL ENGINEER No.10488 JOSEPH B. MEEKS 11/16/01

HAZEN AND SAWYER
Environmental Engineers & Scientists
4011 WestChase Blvd, Raleigh, North Carolina 27607

GRAND STRAND WATER AND SEWER AUTHORITY
SOUTH CAROLINA

CONWAY WWTP
4.0 MGD EXPANSION AND UPGRADE

MISCELLANEOUS STANDARD DETAILS

THE SCALE BAR SHOWN BELOW MEASURES ONE INCH LONG ON THE ORIGINAL DRAWING.

DATE AUGUST 2001
H & S JOB NUMBER 30631
CONTRACT NUMBER 1
DRAWING NUMBER D11
H&S FLAT FILE NO. 56

08/16/01 11:15am FILE= H:\30631\DETAILS\D11 by EWNG XREFs=1513400, 1513600, 1516400, 1516401, 1516402, 1516403, 1545100, 1542100, 1542101, 1542102, 1542103, 1542201, 1553000, NISC\30631-TB.

35-004-054

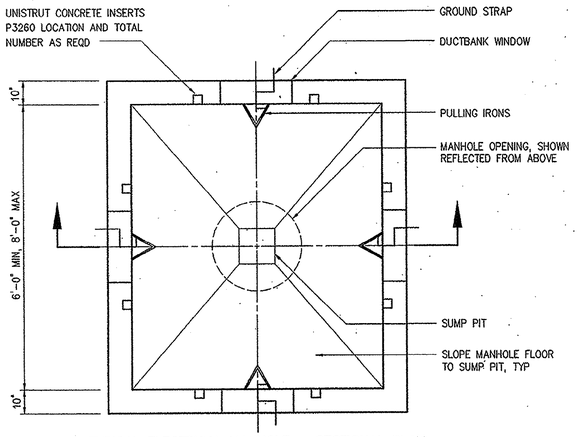

TYPICAL ELECTRICAL MANHOLE – SECTIONAL PLAN

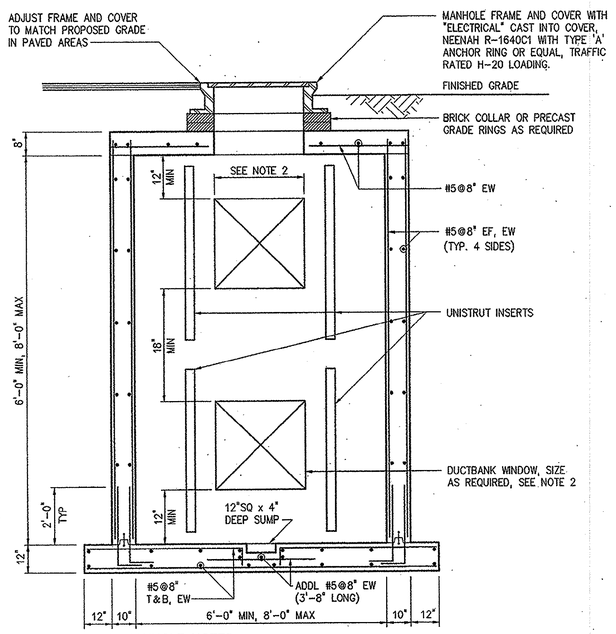

ELECTRICAL MANHOLE NOTES:

1 EPOXY PAINT ALL INTERIOR SURFACES IN ACCORDANCE WITH PAINT SPECIFICATIONS IN DIVISION 9.

2 DUCTBANK WINDOW WIDTH SHALL BE LIMITED TO ONE-THIRD (1/3) OF THE WALL WIDTH, I.E. 2'-0" FOR A 6'-0" WALL.

3 PRECAST MANHOLES MAY BE USED IN LIEU OF THE CAST-IN-PLACE CONCRETE MANHOLE SHOWN AT THE CONTRACTOR'S OPTION. PRECAST MANHOLES SHALL BE RATED FOR H-20 TRAFFIC LOADS. SEE SPECIFICATIONS FOR GENERAL REQUIREMENTS FOR PRECAST UTILITY STRUCTURES.

TYPICAL ELECTRICAL MANHOLE – SECTION

1611802

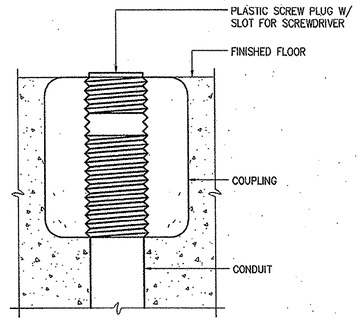

CONDUIT, FLOOR STUB-UP

1611101

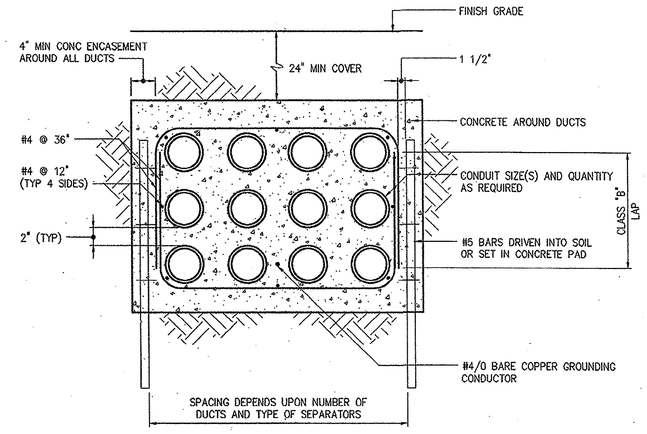

TYPICAL DUCT BANK DETAIL

1611801

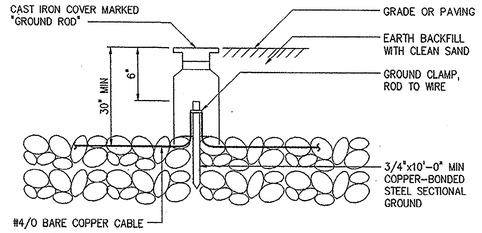

NOTES:

1 REFER TO JOB SPECIFICATION FOR MINIMUM SYSTEM RESISTANCE TO GROUND. IF THIS RESISTANCE CANNOT BE MET WITH SINGLE 10'-0" RODS, ADD ADDITIONAL SECTIONS TO RODS OR ADD NEW RODS AS REQUIRED, SPACED 6'-0" TO 10'-0" FROM EXISTING RODS.

ELECTRICAL INSTALLATION DETAIL
GROUND ROD ASSEMBLY

1617003

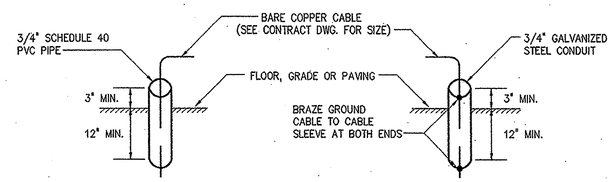

PREFERRED SLEEVE INSTALLATION ALTERNATIVE SLEEVE INSTALLATION

GROUND CABLE SLEEVE INSTALLATION

1617001

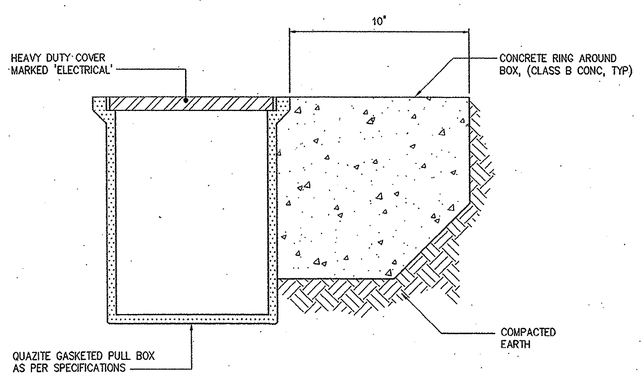

PULL BOX AND HAND HOLE (HH) INSTALLATION DETAIL

1611803

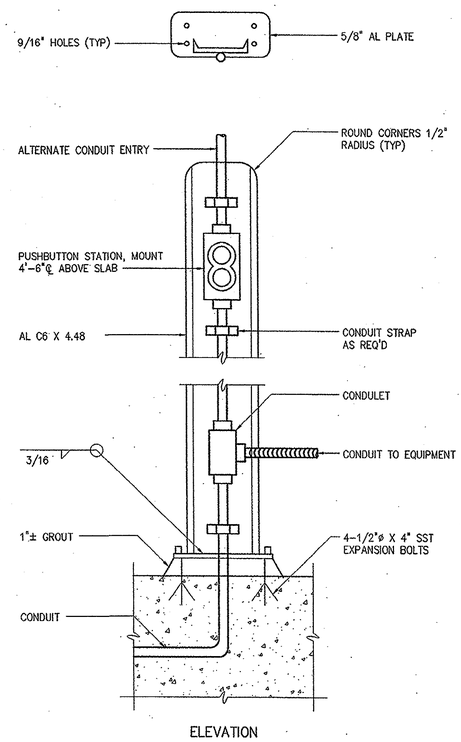

ELEVATION

NOTES:

1 COAT ALUMINUM SURFACES IN CONTACT WITH CONCRETE PER SPECIFICATIONS.

2 SUPPLY 1'-2" DIAMETER X 2'-6" DEEP FOUNDATION WHERE MOUNTING SURFACE IS NOT AVAILABLE.

3 USE SST WASHERS, NUTS AND BOLTS FOR MOUNTING DEVICES.

TYPICAL PUSHBUTTON STATION INSTALLATION DETAIL

1613001

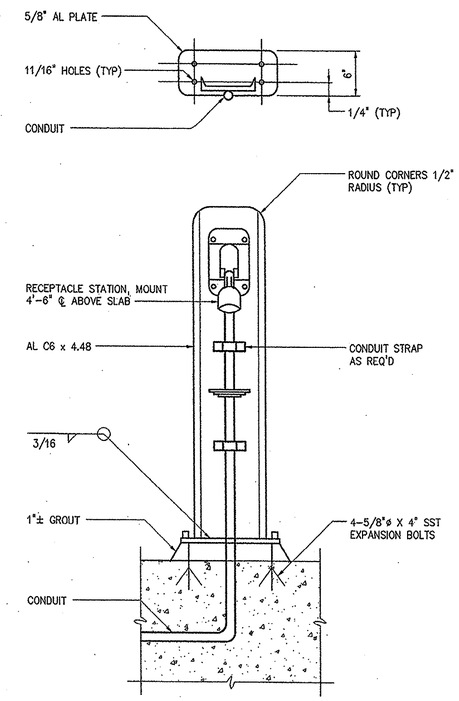

ELEVATION

NOTES:

1 COAT ALUMINUM SURFACES IN CONTACT WITH CONCRETE PER SPECIFICATIONS.

2 CONSTRUCT 1'-6" DIA X 2'-6" DEEP CONCRETE FOUNDATION WHERE NO CONCRETE SLAB EXISTS.

3 USE SST WASHERS, NUTS AND BOLTS FOR MOUNTING DEVICES.

LARGE RECEPTACLE SUPPORT AND MOUNTING

1613002

NO.	ISSUED FOR	DATE	BY
2	CONSTRUCTION	11/16/01	JBM
1	REGULATORY APPROVAL	8-31-01	JBM

DESIGNED H&S
DRAWN H&S
CHECKED JBM
PROJ. ENGR. JBM
APPROVED JBM

SOUTH CAROLINA PROFESSIONAL ENGINEER No. 15512 RONALD L. TAYLOR 11/16/01

SOUTH CAROLINA REGISTERED PROFESSIONAL ENGINEER No.10488 JOSEPH B. MEEKS 11/16/01

HAZEN AND SAWYER
Environmental Engineers & Scientists
4011 WestChase Blvd, Raleigh, North Carolina 27607

GRAND STRAND WATER AND SEWER AUTHORITY
SOUTH CAROLINA

CONWAY WWTP
4.0 MGD EXPANSION AND UPGRADE

MISCELLANEOUS STANDARD DETAILS

THE SCALE BAR SHOWN BELOW MEASURES ONE INCH LONG ON THE ORIGINAL DRAWING.

DATE AUGUST 2001
H & S JOB NUMBER 30631
CONTRACT NUMBER 1
DRAWING NUMBER D12
H&S FLAT FILE NO. 56

08/10/01 11:15am FILE= H:\30631\DETAILS\D12 by ENNG XREFs=1611101, 1611801, 1611802, 1613001, 1613002, 1613003, 1617001, 1617003, MISC\30631-TB,

35-004-055

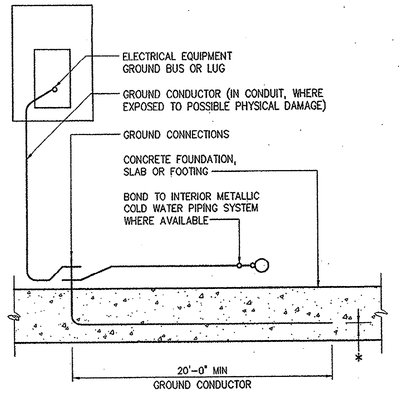

* 1" CLEAR FOR ELEVATED SLABS
3" CLEAR FOR SLABS ON GRADE OR FOOTING

CONCRETE ENCASED GROUND

1617004

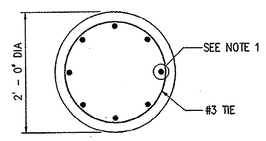

PLAN

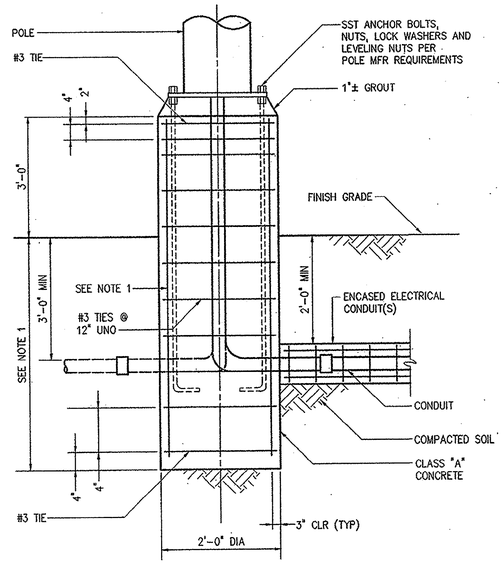

ELEVATION

NOTES:

1 IF NOT SPECIFIED OR SHOWN, DEPTH AND REINFORCEMENT SHALL BE DETERMINED BY POLE MANUFACTURER. LOADING SHALL BE DEAD LOAD PLUS 100 MPH WIND, STANDARD EXPOSURE PER STANDARD BUILDING CODE.

AREA LIGHTING FIXTURE MOUNTING

1650002

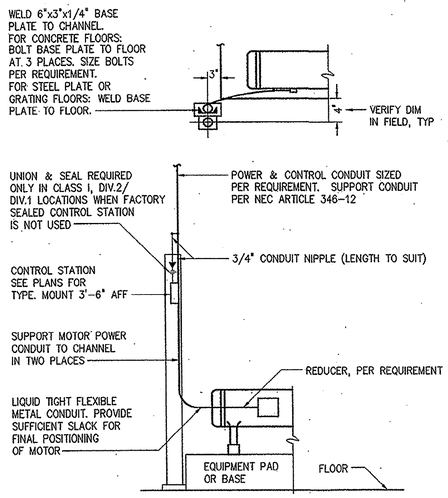

MOTOR CONDUIT INSTALLATION DETAIL
HAZARDOUS AND NONHAZARDOUS LOCATIONS
POWER AND CONTROL WIRE IN SAME CONDUIT

1618001

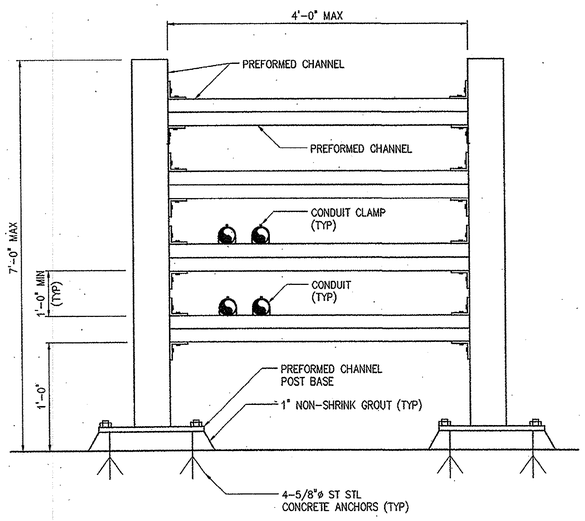

NOTES:

1 CONDUIT SUPPORT RACK SPACING SHALL BE BASED ON MAXIMUM SPAN ALLOWABLE FOR ANY INDIVIDUAL PIPE AND FOR MAXIMUM LOAD.

CONDUIT SUPPORT RACK INSTALLATION DETAIL

1619001

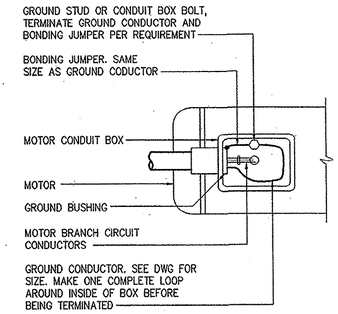

NOTE:

OMIT GROUND BUSHING AND BONDING JUMPER FOR MOTOR CONDUIT BOX WITH THREADED HUB

PREFERRED INSTALLATION

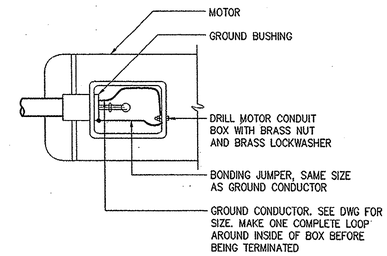

NOTE:

OMIT GROUND BUSHING AND BONDING JUMPER FOR MOTOR CONDUIT BOX WITH THREADED HUB

ALTERNATE INSTALLATION

LOW VOLTAGE MOTOR GROUNDING CONNECTIONS
HAZARDOUS AND NONHAZARDOUS

1618002

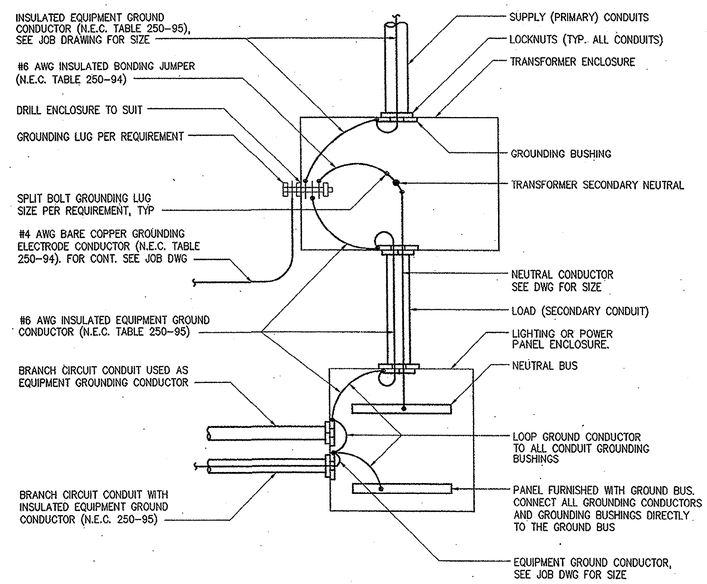

NOTES:

1 GROUNDING CONDUCTORS SHOWN ARE FOR TRANSFORMERS UP TO 45KVA. SEE ELECT. JOB DRAWINGS FOR LARGER TRANSFORMERS OR WHEN VOLTAGE DROP REQUIRES LARGER CONDUCTORS.

LOW VOLTAGE TRANSFORMER GROUNDING INSTALLATION DETAIL

1618003

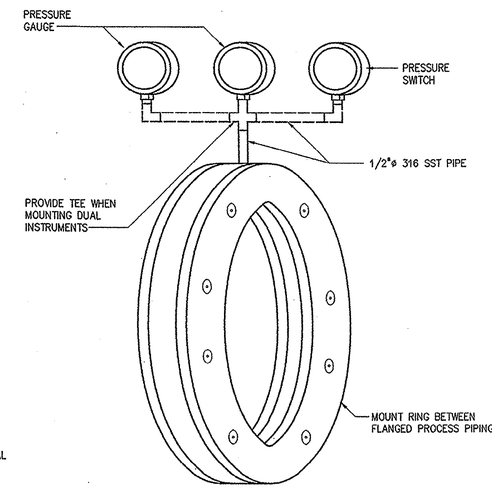

IN-LINE ISOLATING RING DETAIL
FOR HEAVY SOLIDS/SLURRY SERVICE

1691006

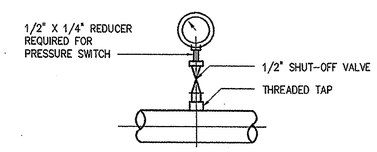

PRESSURE GAUGE OR SWITCH
INSTALLATION WITH THREADED TAP
(SHOWN WITHOUT DIAPHRAGM SEAL)
USED FOR PIPES 2" AND LARGER

1691004

NO.	ISSUED FOR	DATE	BY
2	CONSTRUCTION	11/16/01	JBM
1	REGULATORY APPROVAL	8-31-01	JBM

DESIGNED H&S
DRAWN H&S
CHECKED JBM
PROJ. ENGR. JBM
APPROVED JBM

SOUTH CAROLINA REGISTERED PROFESSIONAL ENGINEER No.10488 RONALD L. TAYLOR 11/16/01

SOUTH CAROLINA REGISTERED PROFESSIONAL ENGINEER No.10488 JOSEPH B. MEEKS 11/16/01

HAZEN AND SAWYER
Environmental Engineers & Scientists
4011 WestChase Blvd, Raleigh, North Carolina 27607

GRAND STRAND WATER AND SEWER AUTHORITY
SOUTH CAROLINA

CONWAY WWTP
4.0 MGD EXPANSION AND UPGRADE

MISCELLANEOUS STANDARD DETAILS

THE SCALE BAR SHOWN BELOW MEASURES ONE INCH LONG ON THE ORIGINAL DRAWING.

DATE AUGUST 2001
H & S JOB NUMBER 30631
CONTRACT NUMBER 1
DRAWING NUMBER D13
H&S FLAT FILE NO. 56

08/16/01 11:16am FILE= H:\30631\DETAILS\D13 by EVING XREFs=1617004, 1618001, 1618002, 1618003, 1619001, 1650001, 1691004, 1691006, MISC\30631-TB,

35-004-056

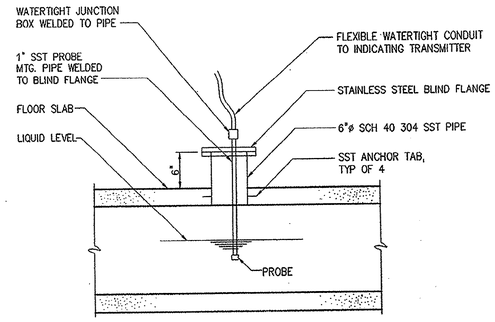

pH PROBE
ENCLOSED CHANNEL INSERTION
MOUNTING DETAIL

1691009

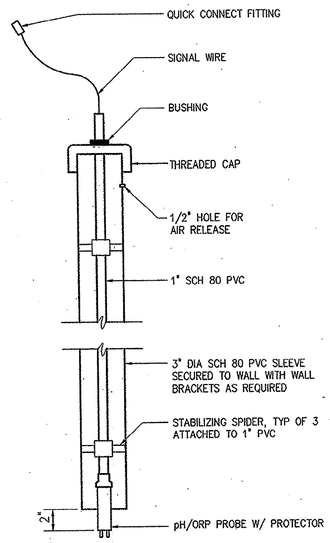

REMOVABLE pH/ORP PROBE
IN STATIONARY SLEEVE

1696104

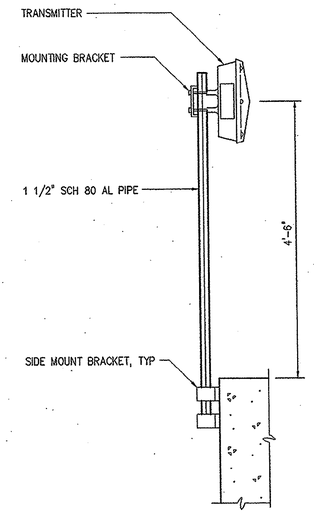

ELEVATION

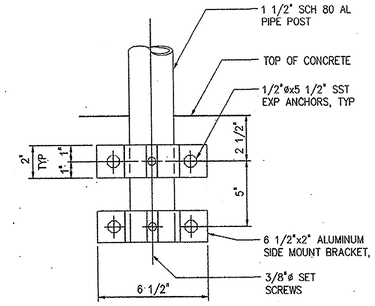

SIDE MOUNT
TO CONCRETE

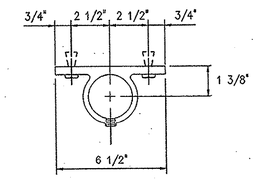

PLAN OF BRACKET

TYPICAL PIPE STAND TRANSMITTER
MOUNTED ON SIDE WALL

1696213

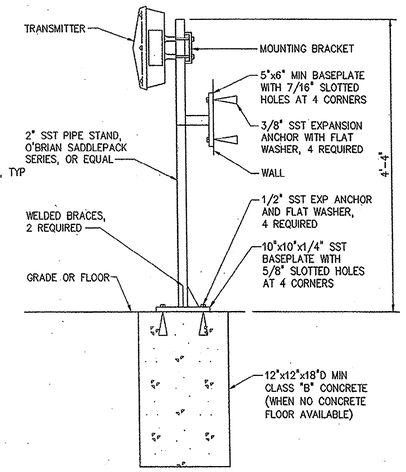

TYPICAL PIPE STAND TRANSMITTER MOUNT
FLOOR OR WALL

1696214

NOTES:
1. TEMPERATURE INSTRUMENT NOT SHOWN
2. INSERTION LENGTH "L" SHALL BE AS FOLLOWS:
FOR PIPES UP TO 12 INCHES "L" SHALL EQUAL 1/3 THE DIAMETER OF THE PIPE. FOR LARGER PIPES AND VESSELS, "L" SHALL BE SIZED SO THAT IT EXTENDS 4 INCHES INTO THE PROCESS.

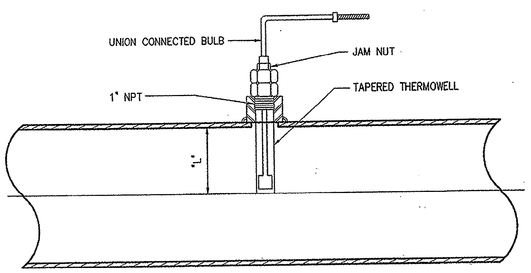

TYPICAL TEMPERATURE ELEMENT

1696100

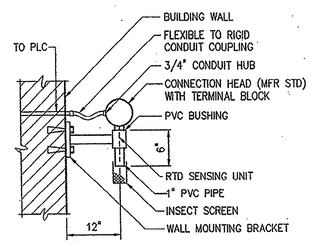

NOTE: TIP OF PROBE SHOULD NOT PROTRUDE FROM THE PVC PIPE.

TYPICAL AMBIENT TEMPERATURE
SENSING ELEMENT MOUNTED
ON EXTERIOR WALL

1696103

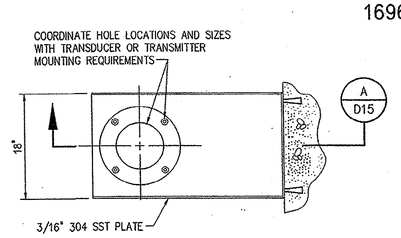

ULTRASONIC LEVEL TRANSDUCER OR TRANSMITTER
WALL MOUNTING DETAIL

1696210

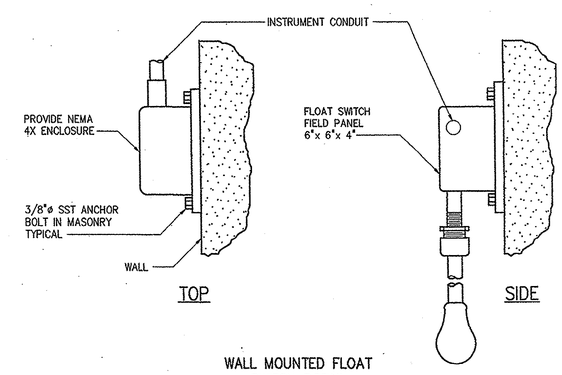

WALL MOUNTED FLOAT
SWITCH DETAIL

1696203

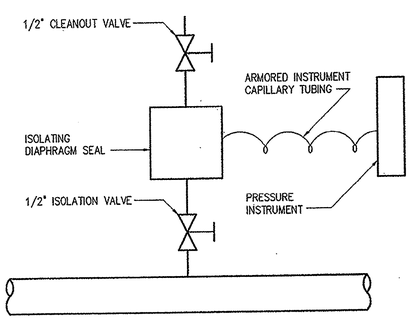

TAPPED DIAPHRAM SEAL DETAIL

1696105

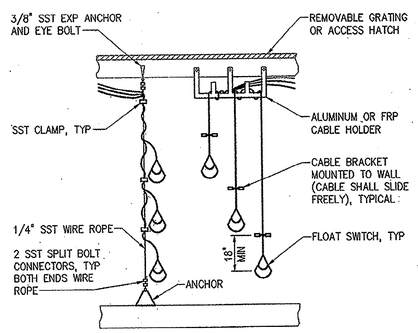

TYPICAL LEVEL SWITCH
MOUNTING DETAILS

1696200

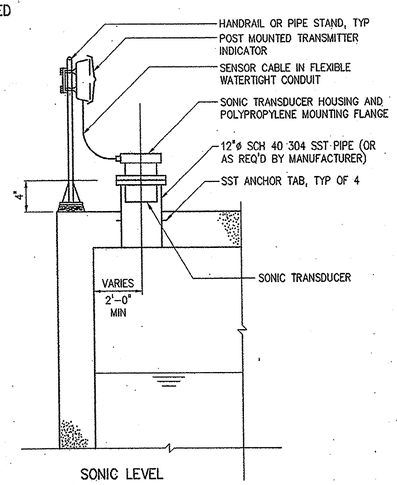

SONIC LEVEL
SENSOR DETAIL

1696202

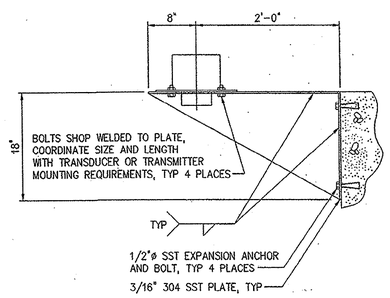

ULTRASONIC LEVEL TRANSDUCER OR TRANSMITTER
WALL MOUNTING DETAIL

SECTION A/D15
NTS

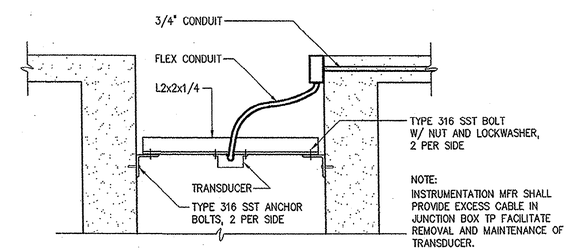

NOTE:
INSTRUMENTATION MFR SHALL PROVIDE EXCESS CABLE IN JUNCTION BOX TP FACILITATE REMOVAL AND MAINTENANCE OF TRANSDUCER.

TRANSDUCER MOUNTING DETAIL

1696215

NO.	ISSUED FOR	DATE	BY
2	CONSTRUCTION	11/16/01	JBM
1	REGULATORY APPROVAL	8-31-01	JBM

DESIGNED H&S
DRAWN H&S
CHECKED JBM
PROJ. ENGR. JBM
APPROVED

SOUTH CAROLINA REGISTERED PROFESSIONAL ENGINEER No. 16... DONALD L. TAYLOR 11/16/01

SOUTH CAROLINA REGISTERED PROFESSIONAL ENGINEER No. 10488 JOSEPH B. MEEKS, JR. 11/16/01

HAZEN AND SAWYER
Environmental Engineers & Scientists
4011 WestChase Blvd, Raleigh, North Carolina 27607

GRAND STRAND WATER AND SEWER AUTHORITY
SOUTH CAROLINA

CONWAY WWTP
4.0 MGD EXPANSION AND UPGRADE

MISCELLANEOUS STANDARD DETAILS

THE SCALE BAR SHOWN BELOW MEASURES ONE INCH LONG ON THE ORIGINAL DRAWING.

DATE AUGUST 2001
H & S JOB NUMBER 30631
CONTRACT NUMBER 1
DRAWING NUMBER D14
H&S FLAT FILE NO. 56

08/16/01 11:16am FILE= H:\30631\DETAILS\D14 by EMNG XREFs=1691009, 1696100, 1696104, 1696105, 1696200, 1696203, 1696213, 1696214, 1696202, 1696210, 1696211, 1696215, 1696103, MISC\30631-TB.

35-004-059

LIGHTING

A1 — 2' X 4' FLUORESCENT FIXTURE
LETTER DENOTES TYPE
NUMBER DENOTES CIRCUIT

1' X 4' OR 1' X 8' FLUORESCENT FIXTURE

#-Q — H.I.D. OR INCANDESCENT FIXTURE
CEILING MOUNTED # DENOTES CIRCUIT
Q DENOTES QUARTZ STANDBY S DENOTES STANCHION

#-Q — WALL MOUNTED FIXTURE
# DENOTES CIRCUIT Q DENOTES QUARTZ STANDBY

RECESSED FIXTURE

CEILING MOUNTED EXIT SIGN

WALL MOUNTED EXIT SIGN

— EMERGENCY LIGHT FIXTURE
# DENOTES CIRCUIT

POLE MOUNTED FIXTURE

RECEPTACLES

— DUPLEX RECEPTACLE
SUBSCRIPT DENOTES TYPE:
GFCI DENOTES GROUND FAULT CIRCUIT INTERRUPT
UPS DENOTES UNINTERRUPTABLE POWER SUPPLY
# DENOTES CIRCUIT
WPCR DENOTES WEATHERPROOF AND CORROSION RESISTANT

SINGLE OUTLET RECEPTACLE

SPECIAL PURPOSE OUTLET

MULTI-OUTLET RECEPTACLE SINGLE

MULTI-OUTLET RECEPTACLE DUPLEX

240 VOLT RECEPTACLE

PANELS AND BOXES

JB — JUNCTION BOX

PB — PULL BOX

HVAC AND FIRE ALARM

FIRE ALARM PULL STATION

FIRE ALARM CONTROL PANEL

ANNUNCIATOR

DD — DUCT DETECTOR

S Z — SMOKE DETECTOR
SUBSCRIPT DENOTES TYPE:
Z DENOTES IONIZATION
P DENOTES PHOTOELECTRIC
T DENOTES THERMAL

T — THERMOSTAT

R — AMBIENT TEMPERATURE TRANSMITTER

UNIT HEATER

SWITCHES

3 — WALL SWITCH
SUBSCRIPT DENOTES TYPE:
NO SUBSCRIPT DENOTES SINGLE POLE
3 DENOTES 3 WAY M DENOTES MANUAL MOTOR STARTER
4 DENOTES 4 WAY D DENOTES DIMMER
# DENOTES CIRCUIT
WPCR DENOTES WEATHERPROOF AND CORROSION RESISTANT

COMBINATION MOTOR STARTER

DISCONNECT SWITCH

LS — DOOR LIMIT SWITCH

LOCAL CONTROL STATION

SS — SPEED SWITCH

WIRING

OHE — OVERHEAD ELECTRICAL LINE

CONDUIT HOME RUN

CONDUIT EXPOSED

CONDUIT CONCEALED

FLEXIBLE CONDUIT

SCHEMATICS

H O A — 3-POSITION SELECTOR SWITCH
HAND - OFF - AUTO
XOO
OOX

START — PUSHBUTTON SWITCH N.O.
TEXT DENOTES LEGEND PLATE

STOP — PUSHBUTTON SWITCH N.C.
TEXT DENOTES LEGEND PLATE

E-STOP — MUSHROOM HEAD EMERGENCY STOP
PUSHBUTTON SWITCH N.C. MAINTAINED
TEXT DENOTES LEGEND PLATE

STOP L.O. — PUSHBUTTON SWITCH N.C. WITH LOCK-OUT
TEXT DENOTES LEGEND PLATE

DISCONNECT SWITCH N.O.

DISCONNECT SWITCH N.C.

TS — TEMPERATURE SWITCH OR THERMOSTAT N.O.
TEXT DENOTES TAG NUMBER

TS — TEMPERATURE SWITCH OR THERMOSTAT N.C.
TEXT DENOTES TAG NUMBER

PS — PRESSURE SWITCH N.O.
TEXT DENOTES TAG NUMBER

PS — PRESSURE SWITCH N.C.
TEXT DENOTES TAG NUMBER

LS — LEVEL SWITCH N.O.
TEXT DENOTES TAG NUMBER

LS — LEVEL SWITCH N.C.
TEXT DENOTES TAG NUMBER

TR — ON DELAY TIMED SWITCH N.O.T.C.
TEXT DENOTES TAG NUMBER

TR — ON DELAY TIMED SWITCH N.C.T.O.
TEXT DENOTES TAG NUMBER

TR — OFF DELAY TIMED SWITCH N.O.T.O.
TEXT DENOTES TAG NUMBER

TR — OFF DELAY TIMED SWITCH N.C.T.C.
TEXT DENOTES TAG NUMBER

TS — TORQUE SWITCH
TEXT DENOTES TAG NUMBER

LS — LIMIT SWITCH
TEXT DENOTES TAG NUMBER

— CONTACT (NORMALLY OPEN)
# DENOTES COIL NUMBER

— CONTACT (NORMALLY CLOSED)
# DENOTES COIL NUMBER

R — INDICATOR LIGHT - LETTER DENOTES COLOR

PTT G — PUSH-TO-TEST INDICATOR LIGHT
LETTER DENOTES COLOR

ETM — ELAPSED TIME METER

SV — SOLENOID VALVE

MECHANICAL INTERLOCK CONNECTION

M XXXX — COIL
M DENOTES MOTOR STARTER
CR DENOTES CONTROL RELAY
TR DENOTES TIME DELAY RELAY
LC DENOTES LIGHTING CONTACTOR
PR DENOTES INTERPOSING PILOT RELAY
XXX DENOTES REFERENCE LINE NUMBER

SINGLE LINE

TX-STRUCTURE DESIGNATION
2500 kVA
480-120/208V
TRANSFORMER
3P/4W
TYPE OF TRANSFORMER

50 — PROTECTIVE RELAY, NUMBER
DENOTES IEEE DEVICE FUNCTION

1200A 52 — MEDIUM VOLTAGE DRAWOUT
CIRCUIT BREAKER

100 A — FUSE

800 AF / 800 AT — DRAWOUT POWER CIRCUIT BREAKER

800 AF / 800 AT — MOLDED CASE CIRCUIT BREAKER

THERMAL OVERLOAD RELAY

GROUND

600:5A (3) — CURRENT TRANSFORMER
NUMBER DENOTES QUANTITY

480-120V (3) — POTENTIAL TRANSFORMER
NUMBER DENOTES QUANTITY

DRAW-OUT ELEMENT

800A 3Ø 3W ATS — AUTOMATIC OR MANUAL
TRANSFER SWITCH

25 — MOTOR
NUMBER DENOTES HORSEPOWER

500kW 480V,3Ø,4W — GENERATOR
NUMBER DENOTES REQUIRED
kW RATING AND VOLTAGE

15A MCP — FULL VOLTAGE NON-REVERSING
STARTER
NUMBER DENOTES NEMA SIZE
DP# DENOTES DEFINITE PURPOSE CONTACTOR
NUMBER DENOTES CONTINUOUS
CURRENT RATING OF MCP

200AF MCP — REDUCED VOLTAGE
AUTO-TRANSFORMER
STARTER
NUMBER DENOTES NEMA SIZE
NUMBER DENOTES CONTINUOUS
CURRENT RATING OF MCP

30A MCP — FULL VOLTAGE REVERSING
STARTER
NUMBER DENOTES NEMA SIZE
NUMBER DENOTES CONTINUOUS
CURRENT RATING OF MCP

SINGLE LINE, CONT'D.

5 — LINE REACTOR
NUMBER DENOTES PERCENT IMPEDANCE

CAPACITOR

V VS — VOLTMETER AND SWITCH

ST — SHUNT TRIP

TVSS — TRANSIENT VOLTAGE SURGE SUPPRESSOR

LIGHTNING ARRESTOR

K — KIRK-KEY INTERLOCK

LP-# — COMBINATION POWER UNIT

100A MCP, 5%, VFD — VARIABLE FREQUENCY DRIVE
X% DENOTES LINE REACTOR PERCENT IMPENDANCE

100A MCP, IC, RVSS, OC — REDUCED VOLTAGE SOLID STATE STARTER
IC - DENOTES INPUT ISOLATION CONTACTOR
OC - DENOTES OUTPUT ISOLATION CONTACTOR
BC - DENOTE BYPSASS CONTACTOR
BC DP - DENOTES DEFINITE PURPOSE BYPASS CONTACTOR

100A MCP, 100A MCP, 4, 5%, VFD, OC — VFD WITH BYPASS STARTER
NUMBER DENOTES NEMA SIZE
OC - DENOTES OUTPUT ISOLATION CONTACTOR

100A MCP, 100A MCP, 5%, IC, VFD, RVSS, OC, OC — VFD WITH RVSS BYPASS
OC - DENOTES OUTPUT ISOLATION CONTACTOR
IC - DENOTES INPUT CONTACTOR

ABBREVIATIONS

TPS	TWISTED PAIR SHIELDED
FSS	FUSED SAFETY SWITCH
NFSS	NON-FUSED SAFETY SWITCH
SST	STAINLESS STEEL
RVAT	REDUCED VOLTAGE AUTO TRANSFORMER
L_O_R	LOCAL_OFF_REMOTE
H_O_A	HAND_OFF_AUTO
W.T.	WALK THRU
PLC	PROGRAMMABLE LOGIC CONTROLLER
C.	CONDUIT
SP. C.	SPARE CONDUIT
WIC	WALL MOUNTABLE INTERCONNECT CENTER
PC	PHOTOCELL
S.E.	SERVICE ENTRANCE RATED

EQUIPMENT/DEVICE LOCATION SYMBOLS

* LOCATED AT MCC OR COMBINATION STARTER

△ LOCATED IN FIELD

□ LOCATED AT VFD

MISC PLAN VIEW SYMBOLS

E — EQUIPMENT CONNECTION

GROUND ROD

— CONCRETE ENCASED DUCT BANK
IDENTIFIER. # DENOTES NUMBER.
SEE DUCT BANK SCHEDULE.

— CONDUIT AND WIRE (SEE LEGEND)

INSTRUMENT TRANSMITTER

COMMUNICATIONS

TELEPHONE OR NETWORK DROP

PAGER RECEPTACLE

ALARM HORN

Under ground conduit — UG

Above ground Conduit — AG

SPARE Conduit — SC
Not otherwise indicated on plans

GENERAL NOTES:

1 UNLESS SPECIFICALLY NOTED OTHERWISE, ALL UNDERGROUND CONCRETE ENCASED ELECTRICAL CONDUITS SHALL BE PER STANDARD DETAIL 1611801.

2 THE INSTALLATION OF ALL CONCRETE ENCASED ELECTRICAL CONDUITS SHALL COMPLY WITH ACI 318, SECTION 6.3. CONTRACTOR SHALL SUPPLY EXPANSION JOINT FITTINGS AS REQUIRED FOR THERMAL EXPANSION AND DEFLECTION.

3 BOND ALL NEW CONCRETE ENCASED GROUND CONDUCTORS TO EXISTING GROUND CONDUCTORS IN ALL MANHOLES, PULL BOXES, CABLE TRAYS, AND SIMILAR LOCATIONS WHERE APPLICABLE.

4 UNLESS OTHERWISE SPECIFIED OR NOTED, ALL WALL MOUNTED ELECTRICAL PANELS, ENCLOSURES, AND SIMILAR EQUIPMENT SHALL BE MOUNTED 6'-6" (MAX) FROM THE TOP OF THE PANEL TO FINISHED FLOOR OR GRADE.

5 UNLESS OTHERWISE NOTED, ALL LIGHTING SWITCHES, CONTROL SWITCHES, AND SIMILAR EQUIPMENT SHALL BE MOUNTED WITH THEIR CENTERLINE APPROXIMATELY 4'-0" ABOVE FINISHED FLOOR, SLAB, OR GRADE. THERMOSTATS SHALL BE MOUNTED 4'-4" ABOVE FINISHED FLOOR.

6 A SEPARATE EQUIPMENT GROUNDING CONDUCTOR SHALL BE PROVIDED FOR EACH CIRCUIT (SEPARATE CONDUCTOR IN THE CONDUIT). THE CONDUCTOR SHALL BE TERMINATED AT THE PROPER DEVICE, TERMINAL OR LUG AT THE POWER SOURCE (MCC GROUND BUS, PANELBOARD GROUND BUS, ETC.). GROUND CONDUCTOR SIZE SHALL BE PER THE LATEST EDITION OF THE NEC.

7 ELECTRICAL SYSTEMS INSTALLED IN HAZARDOUS LOCATIONS SHALL BE CONSTRUCTED IN ACCORDANCE WITH CHAPTER 5, ART. 500 OF THE LATEST EDITION OF THE NEC. CONTRACTOR SHALL SEAL ALL CONDUITS LEAVING HAZARDOUS AREA. WALL AND FLOOR OPENINGS SHALL BE SEALED WITH FIREPROOF COMPOUND.

8 ALL EQUIPMENT LOCATED IN HAZARDOUS AREAS SHALL BE SUITABLE FOR THE CLASS, DIVISION, AND GROUP RATING OF THE LOCATION.

9 UNLESS SPECIFICALLY NOTED OTHERWISE, EXISTING PAVEMENT SHALL BE SAW CUT AND REMOVED TO ALLOW FOR THE INSTALLATION OF NEW ELECTRICAL DUCTBANKS. AFTER INSTALLATION, REPLACE PAVEMENT WITH NEW TO MATCH ORIGINAL CONDITIONS.

10 CONTRACTOR SHALL COORDINATE WITH LOCAL UTILITY COMPANY REGARDING ELECTRIC SERVICE REQUIREMENTS. CONTRACTOR SHALL FURNISH AND INSTALL ALL CONDUIT, WIRE, METER BASE, AND OTHER EQUIPMENT AS NECESSAY FOR THE SERVICE. CLOSE COORDINATION BETWEEN THE UTILITY, CONTRACTOR AND THE OWNER IS ESSENTIAL AND REQUIRED.

NO.	ISSUED FOR	DATE	BY
2	CONSTRUCTION	11/16/01	JBM
1	REGULATORY APPROVAL	8-31-01	JBM

DESIGNED JLH
DRAWN JLH
CHECKED AM
PROJ. ENGR. JBM
APPROVED RLT

SOUTH CAROLINA REGISTERED PROFESSIONAL ENGINEER No. 16512 RONALD L. TAYLOR 11/16/01

SOUTH CAROLINA REGISTERED PROFESSIONAL ENGINEER No. 10488 JOSEPH B. MEEKS JR. 11/16/01

SOUTH CAROLINA REGISTERED PROFESSIONAL ENGINEER No. 17110 RONALD J. RATASKY 11/15/01

HAZEN AND SAWYER
Environmental Engineers & Scientists
4011 WestChase Blvd, Raleigh, North Carolina 27607

GRAND STRAND WATER AND SEWER AUTHORITY
SOUTH CAROLINA

CONWAY WWTP
4.0 MGD EXPANSION AND UPGRADE

ELECTRICAL
LEGEND AND GENERAL NOTES

THE SCALE BAR SHOWN BELOW MEASURES ONE INCH LONG ON THE ORIGINAL DRAWING.

DATE AUGUST 2001
H & S JOB NUMBER 30631
CONTRACT NUMBER 1
DRAWING NUMBER E1
H&S FLAT FILE NO. 56

35-004-058

Contents of duct bank
2-#4s, 1 #8 grd - Panel LP-B - 2"c.
2 (3#4s, 1 #8 grd) - UVPDC 1 + 2 - 2"c
1 Fiber optic
1 Fiber optic serial cable 2"c.
1 Phone line 2"c

Under ground conduit — UG
Above ground conduit — AG

NOTES

1. SEE DWG E11 FOR DUCTBANK SCHEDULE
2. THE CONTRACTOR SHALL REUSE EXISTING SAFETY SWITCH
3. CONTRACTOR SHALL CONNECT CATEGORY 5 WIRE TO THE EXISITNG PHONE SYSTEM IN THE EXISTING OPERATIONS BUILDING FOR PHONE JACKS AT THE UV TANK AND NEW ELECTRICAL BUILDING.
4. HANDHOLES SHALL BE SIZED TO SUIT THE APPLICATION. HANDHOLES SHALL BE U.L. LISTED, AS MANUFACTURED BY QUAZITE, OR EQUAL.

2"- fiber optics, 1"- phone line to phone board

EXISTING OPERATIONS BUILDING

AG

SEE NOTE 3

Pull box for fiber optics and phone

EXISTING CONWAY INFLUENT PUMP STATION

EXISTING POWER POLE, TYP

Existing Hand hole

2"c - for Existing SCADA

EXISTING SCADA ANTENNA RELOCATED TO NEW ELECTRICAL BUILDING BY OWNER

EXISTING ELECTRICAL BUILDING

NEW OVERHEAD POWER UTILITY LINE

OHE

HANDHOLE, TYP SEE NOTE 4

UG

Ductbank 970'

EXISTING TERTIARY FILTERS

INSTRUMENTATION JUNCTION BOX

2"c for fiber optics & phone

EXISTING TERTIARY FILTERS

Duct bank lies close to road

CELL NO 4 POLISHING POND

CELL NO 3

Ductbank 300'

UV DISINFECTION TANK (E200)

POST AERATION TANK (E300)

PARTIAL SITE PLAN

1"= 5'

At this location 1-pull box for Instrumentation 1-pull box for Power

DECHLORINATION EQUIPMENT

PARSHALL FLUME (E300)

EXISTING CHLORINATION BUILDING

EXISTING STORAGE BUILDING

EXISTING CHEMICAL STORAGE TANK

2-3/4"c Receptacle circuit 3-#12s Flow meter circuit 2-#12s 1-shielded to UV control

Remote Control Point

4' Approx.

EXISTING FILTER PUMP STATION NO. 2 SEE NOTE 2

1-2" spare 1-2" w/ 3-#4 12-#14 & #8 grd 3-#12s

10-#14 spares

EXISTING SLUDGE STORAGE LAGOON

10 #16 spare

Ductbank 478'

SITE PLAN

1"= 20'

(FOR CONTINUATION SEE DWG E11)

Green Wall Construction Services - Steele & Pryor Inc. Florence S.C. 4-11-03

NO.	ISSUED FOR	DATE	BY
2	CONSTRUCTION	11/16/01	JBM
1	REGULATORY APPROVAL	8-31-01	JBM

DESIGNED JLH
DRAWN JLH
CHECKED
PROJ. ENGR. JBM
APPROVED

SOUTH CAROLINA REGISTERED PROFESSIONAL ENGINEER No.16612 RONALD L. TAYLOR 11/16/01

SOUTH CAROLINA REGISTERED PROFESSIONAL ENGINEER No.10488 JOSEPH B. MEEKS JR. 11/16/01

SOUTH CAROLINA REGISTERED PROFESSIONAL ENGINEER No.17 DONALD J. RATASKY 11/15/01

HAZEN AND SAWYER
Environmental Engineers & Scientists
4011 WestChase Blvd, Raleigh, North Carolina 27607

GRAND STRAND WATER AND SEWER AUTHORITY
SOUTH CAROLINA

CONWAY WWTP
4.0 MGD EXPANSION AND UPGRADE

SITE WORK
ELECTRICAL
AREA 1
SITE PLAN

THE SCALE BAR SHOWN BELOW MEASURES ONE INCH LONG ON THE ORIGINAL DRAWING.

DATE AUGUST 2001
H & S JOB NUMBER 30631
CONTRACT NUMBER 1
DRAWING NUMBER E10
H&S FLAT FILE NO. 56

11/15/01 9:55am FILE= H:\30631\ELEC\E010 by ADMINISTRATOR XREFs=MISC\30631-TB, 00\SP-S7.

35-004-059

Greenwall Construction Services - Steele & Pryor Inc. Florence, S.C, 4-10-03

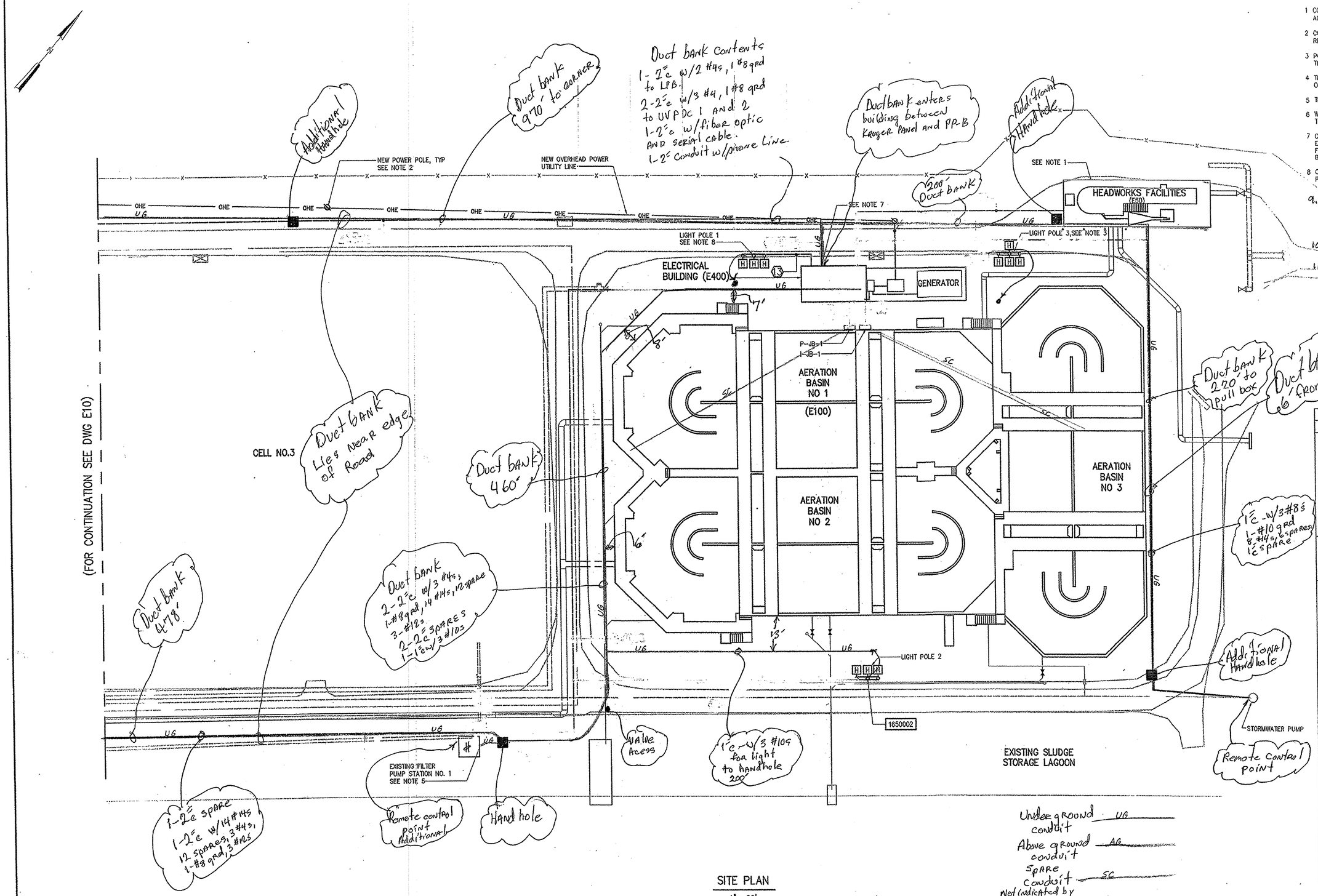

SITE PLAN

1"= 20'

Underground conduit — UG

Above ground conduit — AG

Spare conduit — SC

Not indicated by plans

NOTE

1 CONTRACTOR TO COORDINATE EXACT LOCATION OF ELECTRICAL AND INSTRUMENTATION CONNECTIONS.

2 CONTRACTOR SHALL COORDINATE WITH THE ELECTRIC UTILITY REGARDING THE NEW OVERHEAD LINE.

3 POLE SHALL INCLUDE A 4TH LIGHT FIXTURE TO THE REAR OF THE POLE, AIMED AT THE NEW HEADWORKS FACILITY.

4 THE CONTRACTOR SHALL AIM LIGHTS FOR EVEN DISTRIBUTION OVER THE AERATION BASINS.

5 THE CONTRACTOR SHALL REUSE EXISTING SAFETY SWITCH.

6 WIC IS A WALL MOUNTABLE INTERCONNECT CENTER LOCATED AT THE EXISTING OPERATIONS BUILDING, REFERENCE DRAWING 11.

7 CONTRACTOR SHALL CONNECT CATEGORY 5 WIRE TO THE EXISTING PHONE SYSTEM IN THE EXISTING OPERATIONS BUILDING FOR PHONE JACKS AT THE UV TANK AND NEW ELECTRICAL BUILDING.

8 CONTRACTOR SHALL REFERENCE SECTION 16500 REGARDING PHOTOCELL.

9. I-JB-1 contains controls and instrumentation conduits to basin.

10. P-JB-1 contains power conduits

11. All conduits at the basin route through I-JB-1 and P-JB-1.

DUCTBANK SCHEDULE

NO.	DESCRIPTION	TO
1	9(3#3, #8GND, 2"C) 9(8#14, #14GND, 1"C) 3(3#8, #10GND, 1"C) 3(10#14, #14GND, 1"C) 2(3#10, #10GND, 1"C) 2(8#14, 2#12, #12GND, 1"C) 11(3#12, #12GND, 1"C) 3(2#12, #12GND, 1"C) 3(2#12, #12GND, 1"C) 2(2#12, #12GND, 1"C) 2-2"C SPARE 2-1"C SPARE 2-1"C SPARE	MCC-B MCC-B MCC-B MCC-B MCC-B MCC-B PP-B LP-C LP-C LP-C MCC-B PP-B LP-B
2	11(14#14, #14GND, 1-2/C#16TPS, 1"C) 2(2/C#16TPS, 1"C) 3(2/C#16TPS, 1"C) 3(2/C#16TPS, 1"C) 2-2"C SPARE	KRUGER CP KRUGER CP KRUGER CP KRUGER CP KRUGER CP
3	3#8, #10GND, 1"C 20#14, #14GND, 1"C 10#14, #14GND, 1"C 1-2/C#16TPS, 1"C 2#12, #12GND, 1"C 1-2"C SPARE	PP-B KRUGER CP KRUGER CP KRUGER CP LP-C
4	2(3#1, #6GND, 2"C) 2#4, #8GND, 2"C 2-2"C SPARE	MCC-B MCC-B
5	2(2#12, #12GND, 1"C) 2-2/C#16TPS, 2"C 2-1"C SPARE	LP-B UV-SSC
6	2-4"C FOR UTILITY USE	
7	1-FIBER OPTIC CABLE, 2"C 1-CATEGORY 5 CABLE, 1"C 1-2"C SPARE	WIC SEE NOTE 6
8	1-FIBER OPTIC CABLE, 2"C 1-CATEGORY 5 CABLES, 1"C 1-2"C SPARE	KRUGER CP
9	3#4, #8GND, 2"C 8#14, 2#12, #12GND, 1"C 1-2"C SPARE	MCC-B MCC-B MCC-B
10	3#8, #10GND, 1"C 8#14, 2#12, #12GND, 1"C	MCC-B MCC-B
11	2-2"C SPARES 2-1"C SPARES	
12	2#12, #12GND, 1"C	LP-B
13	2#10, #10GND, 1"C	LC1

NO.	ISSUED FOR	DATE	BY
2	CONSTRUCTION	11/16/01	JBM
1	REGULATORY APPROVAL	8-31-01	JBM

DESIGNED JLH
DRAWN JLH
CHECKED
PROJ. ENGR. JBM
APPROVED

SOUTH CAROLINA REGISTERED PROFESSIONAL ENGINEER No. 16512 RONALD L. TAYLOR 11/16/01

SOUTH CAROLINA REGISTERED PROFESSIONAL ENGINEER No.10488 JOSEPH B. MEEKS JR. 11/16/01

SOUTH CAROLINA REGISTERED PROFESSIONAL ENGINEER No.17110 DAVID J. RATASKY 11/16/01

HAZEN AND SAWYER
Environmental Engineers & Scientists
4011 WestChase Blvd, Raleigh, North Carolina 27607

GRAND STRAND WATER AND SEWER AUTHORITY
SOUTH CAROLINA

CONWAY WWTP
4.0 MGD EXPANSION AND UPGRADE

SITE WORK
ELECTRICAL
AREA 2
SITE PLAN

THE SCALE BAR SHOWN BELOW MEASURES ONE INCH LONG ON THE ORIGINAL DRAWING.

DATE AUGUST 2001
H & S JOB NUMBER 30631
CONTRACT NUMBER 1
DRAWING NUMBER E11
H&S FLAT FILE NO. 56

11/15/01 9:55am FILE= H:\30631\ELEC\E011 by ADMINISTRATOR XREFs=MISC\30631-TB, 00\SP-ST,

35-004-010

NOTES:

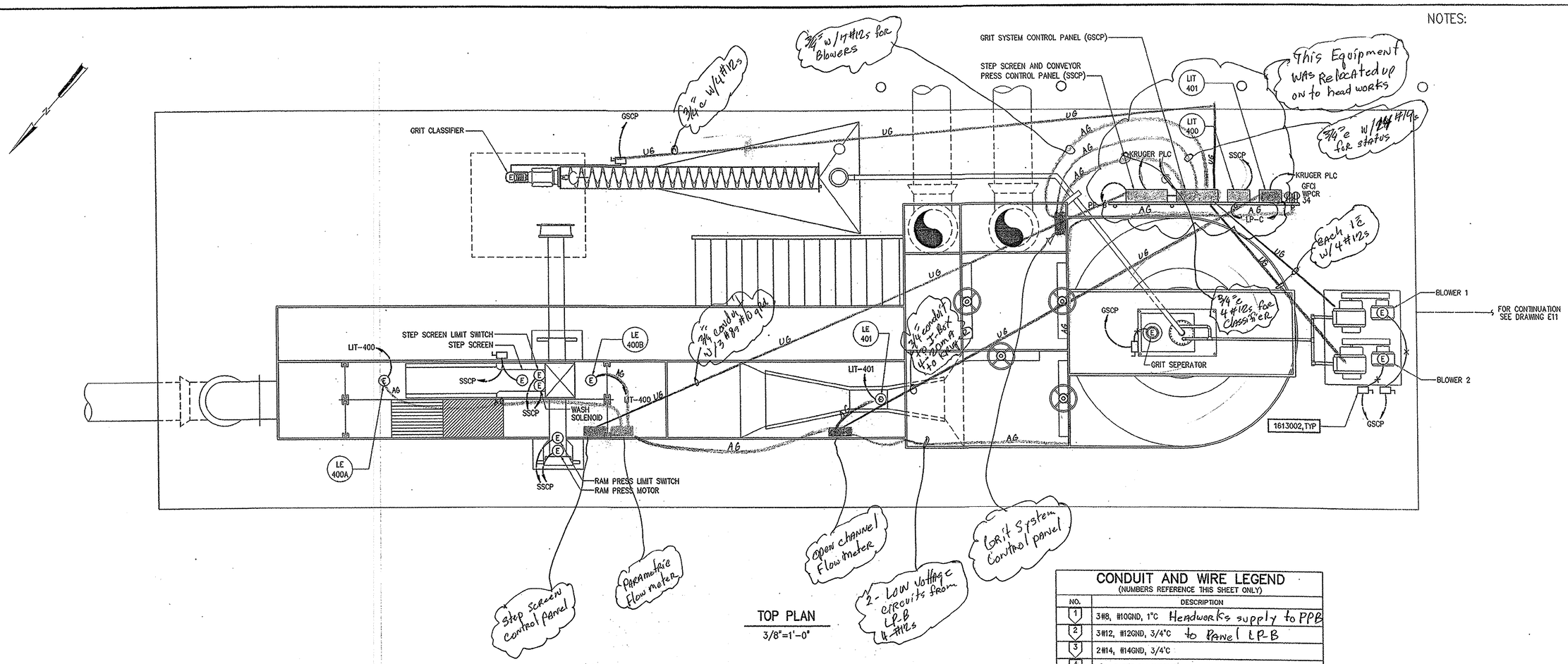

TOP PLAN

3/8"=1'-0"

CONDUIT AND WIRE LEGEND

(NUMBERS REFERENCE THIS SHEET ONLY)

NO.	DESCRIPTION
1	3#8, #10GND, 1"C Headworks supply to PPB
2	3#12, #12GND, 3/4"C to Panel LP-B
3	2#14, #14GND, 3/4"C
4	1"C, CABLE BY SUPPLIER
5	1-2/C#16TPS, #14GND, 1"C to Kruger

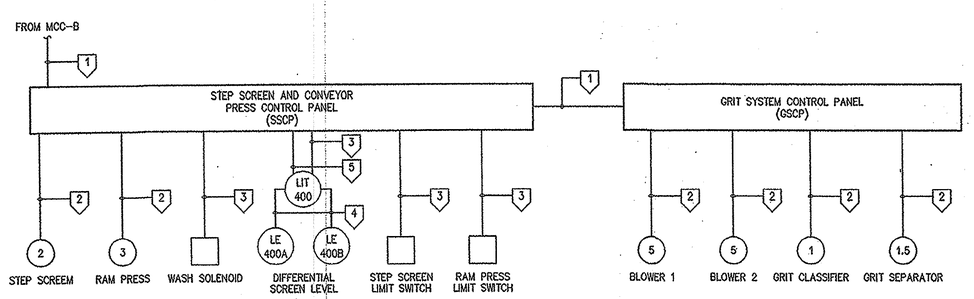

INTERCONNECTION DIAGRAM

Notes

1. Relays were added to the original installation for status indication of SSCP and GSCP.
2. Conduit Above ground. AG
3. Conduit below ground UG

NO.	ISSUED FOR	DATE	BY
2	CONSTRUCTION	11/16/01	JBM
1	REGULATORY APPROVAL	8-31-01	JBM

DESIGNED JLH
DRAWN JLH
CHECKED BDM
PROJ. ENGR. JBM
APPROVED

SOUTH CAROLINA REGISTERED PROFESSIONAL ENGINEER No. 10512 RONALD L. TAYLOR 11/16/01

SOUTH CAROLINA REGISTERED PROFESSIONAL ENGINEER No. 10488 JOSEPH B. MEEKS 11/16/01

SOUTH CAROLINA REGISTERED PROFESSIONAL ENGINEER No. 17121 DAVID J. RATASIK 11/15/01

HAZEN AND SAWYER
Environmental Engineers & Scientists
4011 WestChase Blvd, Raleigh, North Carolina 27607

GRAND STRAND WATER AND SEWER AUTHORITY
SOUTH CAROLINA

CONWAY WWTP
4.0 MGD EXPANSION AND UPGRADE

HEADWORKS FACILITIES
ELECTRICAL
POWER TOP PLAN

THE SCALE BAR SHOWN BELOW MEASURES ONE INCH LONG ON THE ORIGINAL DRAWING.

DATE AUGUST 2001
H & S JOB NUMBER 30631
CONTRACT NUMBER 1
DRAWING NUMBER E50
H&S FLAT FILE NO. 56

11/15/01 9:55am FILE= H:\30631\ELEC\E050 by ADMINISTRATOR XREFs=MISC\30631-TB, 050\HW-TP,

35-004-061

NOTES:

1. ALL WIRING THAT TERMINATES IN A LIGHTING PANEL, POWER PANEL OR MCC SHALL BE ROUTED THROUGH P-JB-1. ALL WIRING THAT TERMINATES IN THE KRUGER CONTROL PANEL SHALL BE ROUTED THROUGH I-JB-1.
2. THE CONTRACTOR SHALL PROVIDE SUNSHADES AS SPECIFIED IN 17700 FOR ALL INSTRUMENT TRANSMITTERS LOCATED OUTSIDE.
3. LEVEL ELEMENT IS MOUNTED IN THE EFFLUENT BOX UNDER WEIR 1B

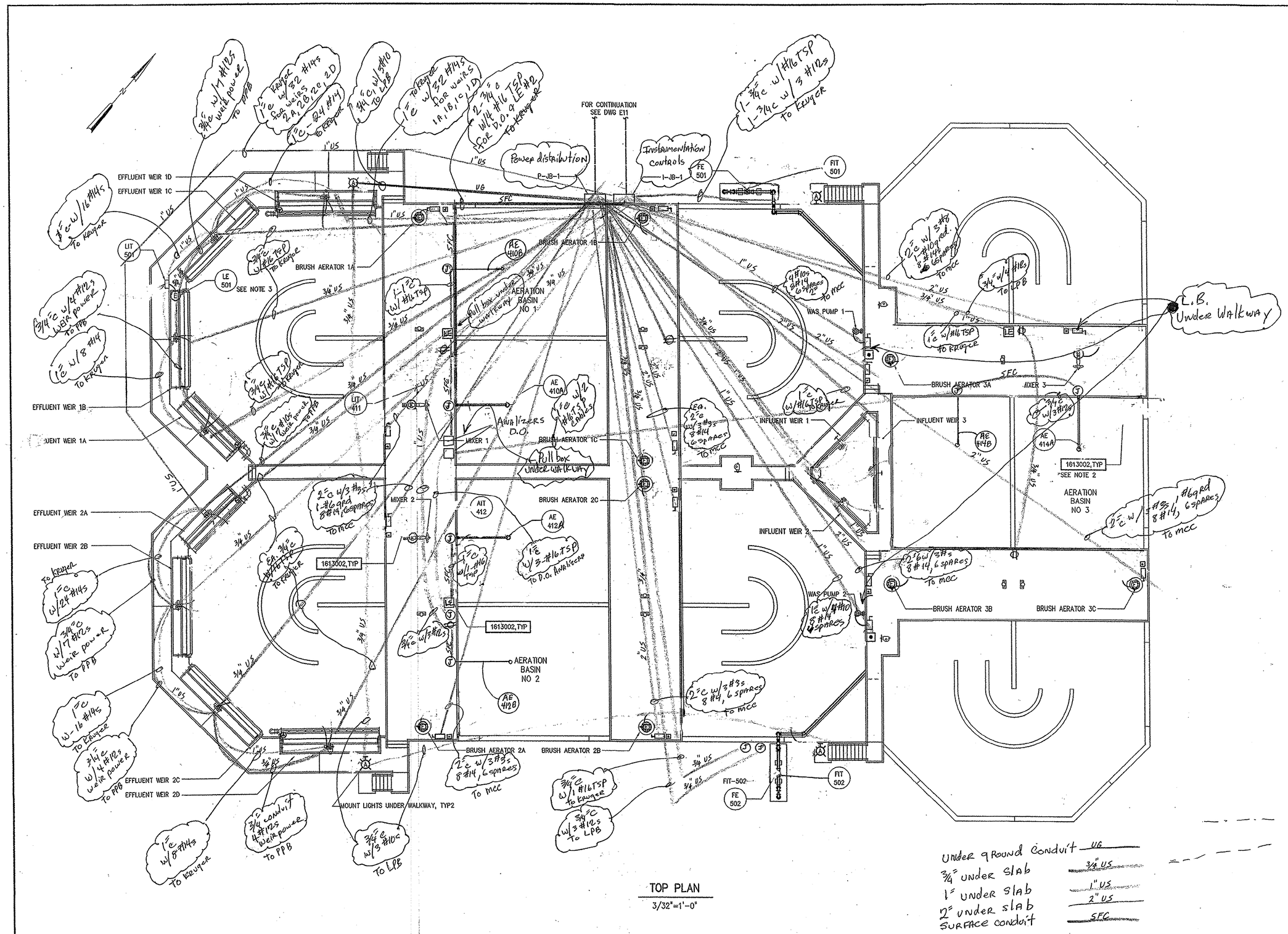

TOP PLAN

3/32"=1'-0"

NO.	ISSUED FOR	DATE	BY
2	CONSTRUCTION	11/16/01	JBM
1	REGULATORY APPROVAL	8-31-01	JBM

DESIGNED JLH
DRAWN JLH
CHECKED
PROJ. ENGR. JBM
APPROVED

SOUTH CAROLINA REGISTERED PROFESSIONAL ENGINEER No.16512 RONALD L. TAYLOR 11/16/01

SOUTH CAROLINA REGISTERED PROFESSIONAL ENGINEER No.10488 BENJAMIN B. MEEKS 11/16/01

SOUTH CAROLINA REGISTERED PROFESSIONAL ENGINEER No.17910 DAVID J. RATASKY 11/15/01

HAZEN AND SAWYER
Environmental Engineers & Scientists
4011 WestChase Blvd, Raleigh, North Carolina 27607

GRAND STRAND WATER AND SEWER AUTHORITY
SOUTH CAROLINA

CONWAY WWTP
4.0 MGD EXPANSION AND UPGRADE

4 MGD TRIPLE DITCH AERATION BASIN
ELECTRICAL
POWER TOP PLAN

THE SCALE BAR SHOWN BELOW MEASURES ONE INCH LONG ON THE ORIGINAL DRAWING.

DATE AUGUST 2001
H & S JOB NUMBER 30631
CONTRACT NUMBER 1
DRAWING NUMBER E100
H&S FLAT FILE NO. 56

11/15/01 9:55am FILE= H:\30631\ELEC\E100 by ADMINISTRATOR XREFs=MISC\30631-TB, 100\01-PT,

35-004-062

NOTES:

1 REFERENCE DRAWING M200 FOR DEMOLITION WORK AND LOCATION OF EXISTING EQUIPMENT TO BE RELOCATED

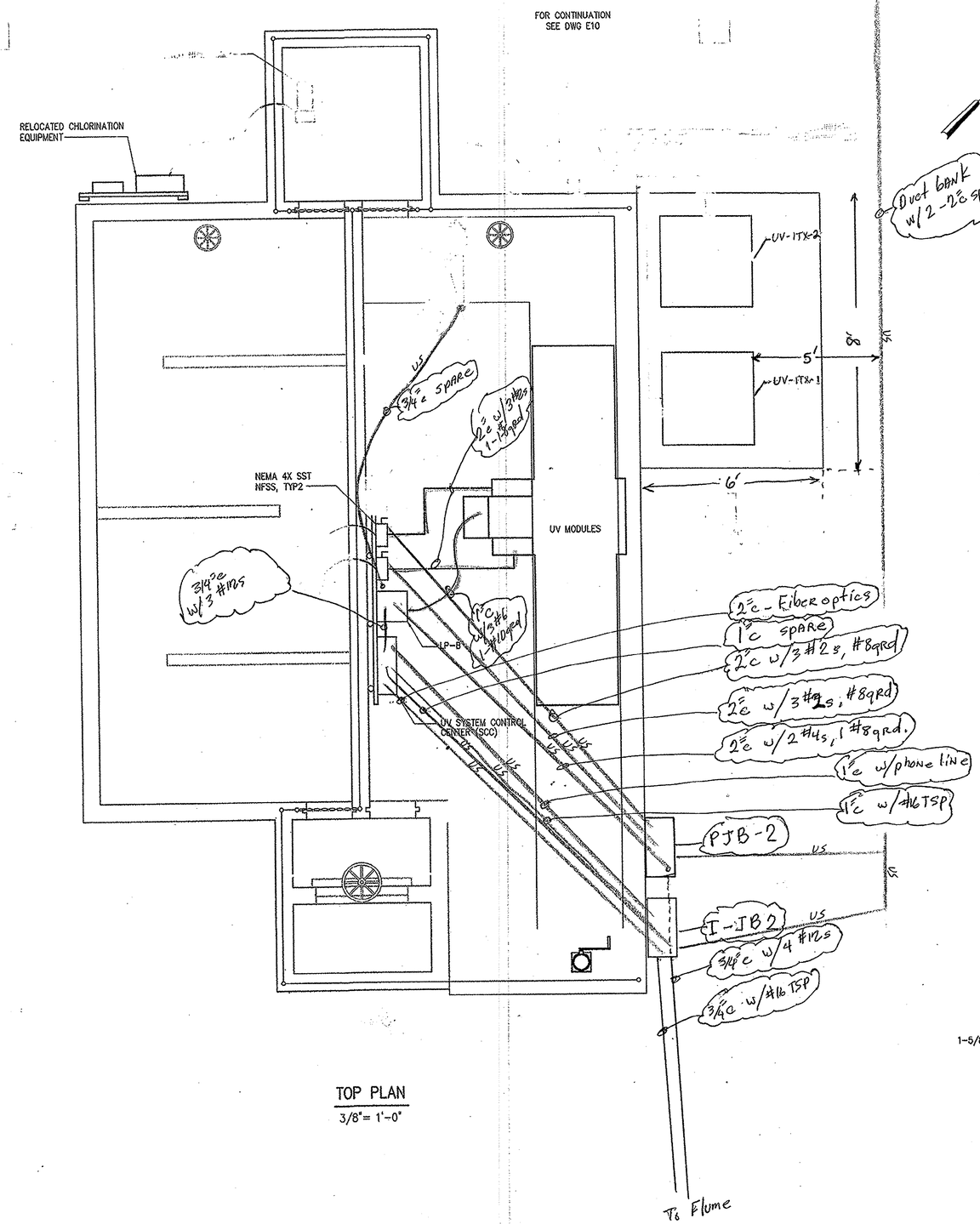

TOP PLAN

3/8" = 1'-0"

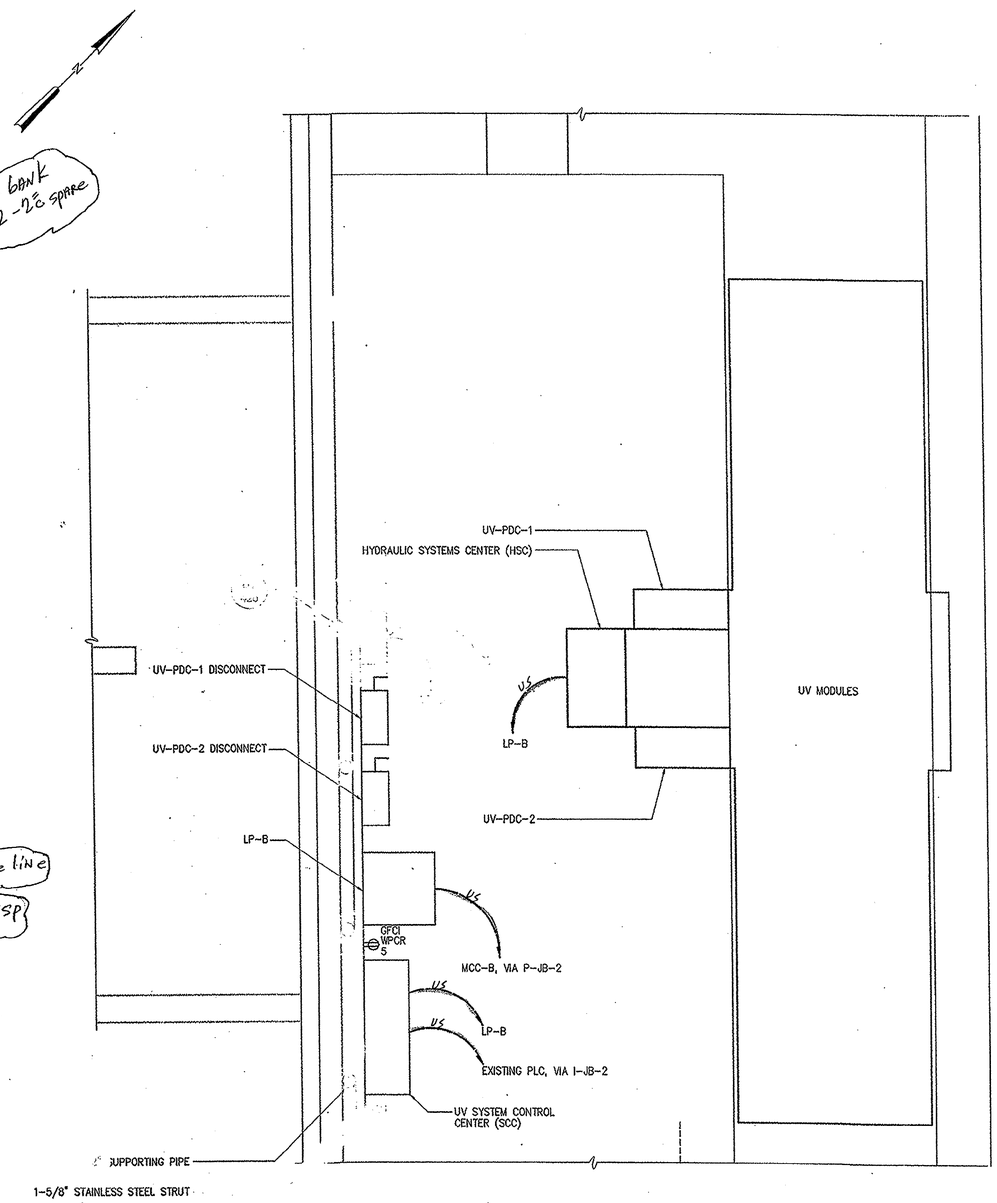

PARTIAL TOP PLAN

3/4" = 1'-0"

NO.	ISSUED FOR	DATE	BY
2	CONSTRUCTION	11/16/01	JBM
1	REGULATORY APPROVAL	8-31-01	JBM

DESIGNED JLH
DRAWN JLH
CHECKED GBM
PROJ. ENGR. JBM
APPROVED

SOUTH CAROLINA REGISTERED PROFESSIONAL ENGINEER No.16512 RONALD L. TAYLOR 11/16/01

SOUTH CAROLINA REGISTERED PROFESSIONAL ENGINEER No.10488 JOSEPH B. MEEKS 11/16/01

SOUTH CAROLINA REGISTERED PROFESSIONAL ENGINEER No.11706 DONALD J. RATASKY 11/15/01

HAZEN AND SAWYER
Environmental Engineers & Scientists
4011 WestChase Blvd, Raleigh, North Carolina 27607

GRAND STRAND WATER AND SEWER AUTHORITY
SOUTH CAROLINA

CONWAY WWTP
4.0 MGD EXPANSION AND UPGRADE

UV DISINFECTION TANK
ELECTRICAL
TOP PLANS

THE SCALE BAR SHOWN BELOW MEASURES ONE INCH LONG ON THE ORIGINAL DRAWING.

DATE AUGUST 2001
H & S JOB NUMBER 30631
CONTRACT NUMBER 1
DRAWING NUMBER E200
H&S FLAT FILE NO. 56

11/15/01 9:55am FILE= H:\30631\ELEC\E200 by ADMINISTRATOR XREFs=200\CC-PT, MISC\30631-TB,

35-004-063

NOTES:

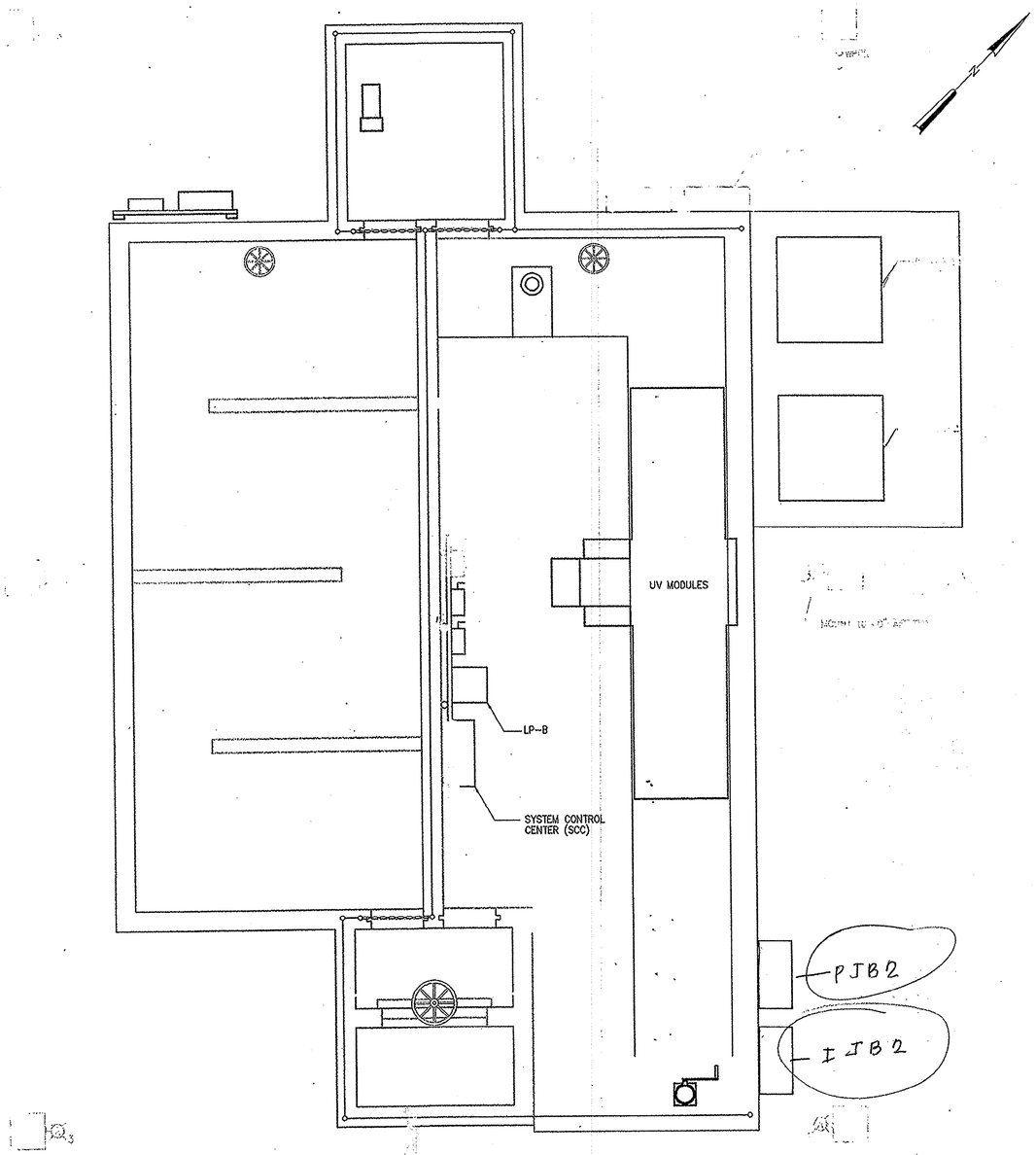

120/240 VOLTS
1Ø, 3 WIRE

LP-B

100AT 25kVA 125AT

TYPE: MPZ
MOUNT: SURFACE

DESCRIPTION	WIRE	CKT BKR TRIP	CKT BKR POLE	CKT BKR NO	VOLT AMPERE øA	VOLT AMPERE øB	VOLT AMPERE øA	VOLT AMPERE øB	CKT BKR NO	CKT BKR POLE	CKT BKR TRIP	WIRE	DESCRIPTION
	1	20	1	1	150		6000		2	1	60	2	HYDRAULICS SYSTEM CENTER
	1	20	1	3		1200		2016	4	1	20	1	UV SYSTEM CONTROL CENTER
UV ACCEPT	1	20	1	5	350		170		6	1	20	1	FLUME RECP
Flow Meter	1	20	1	7		1000		1000	8	1	20	1	
Flume RECEPT	1	20	1	9	150		1000		10	1	20	1	
SPARE		20	1	11					12	1	20		SPARE
SPARE		20	1	13					14	1	20		SPARE
SPARE		20	1	15					16	1	20		SPARE
SPACE				17					18				SPACE
SPACE				19					20				SPACE
SPACE				21					22				SPACE
SPACE				23					24				SPACE
			TOTAL		650	2200	7170	3016	TOTAL				
					PHASE TOTAL		TOTAL LOAD						
					7820	5216	13036						

CONDUIT AND WIRE LEGEND
(NUMBERS REFERENCE THIS SHEET ONLY)

NO.	DESCRIPTION
1	2#12, #12GND, 3/4"C
2	2#4, #8, 1"C

NO.	ISSUED FOR	DATE	BY
2	CONSTRUCTION	11/16/01	JBM
1	REGULATORY APPROVAL	8-31-01	JBM

DESIGNED JLH
DRAWN JLH
CHECKED GOM
PROJ. ENGR. JBM
APPROVED

SOUTH CAROLINA REGISTERED PROFESSIONAL ENGINEER No.16312 RONALD L. TAYLOR 11/14/01

SOUTH CAROLINA REGISTERED PROFESSIONAL ENGINEER No.10488 JOSHUA B. MEEKS 11/16/01

SOUTH CAROLINA REGISTERED PROFESSIONAL ENGINEER No.17216 RONALD J. RATASKY 11/15/01

HAZEN AND SAWYER
Environmental Engineers & Scientists
4011 WestChase Blvd, Raleigh, North Carolina 27607

GRAND STRAND WATER AND SEWER AUTHORITY
SOUTH CAROLINA

CONWAY WWTP
4.0 MGD EXPANSION AND UPGRADE

UV DISINFECTION TANK
ELECTRICAL
TOP LIGHTING PLAN

THE SCALE BAR SHOWN BELOW MEASURES ONE INCH LONG ON THE ORIGINAL DRAWING.

DATE AUGUST 2001
H & S JOB NUMBER 30631
CONTRACT NUMBER 1
DRAWING NUMBER E201
H&S FLAT FILE NO. 56

11/15/01 9:54am FILE= H:\30631\ELEC\E201 by ADMINISTRATOR XREFS=200\CC-PT, MISC\30631-TB,

35-004-064

NOTES:

1 THE CONTRACTOR SHALL PROVIDE SUNSHADES AS SPECIFIED IN 7700 FOR ALL INSTRUMENT TRANSMITTERS LOCATED OUTSIDE.

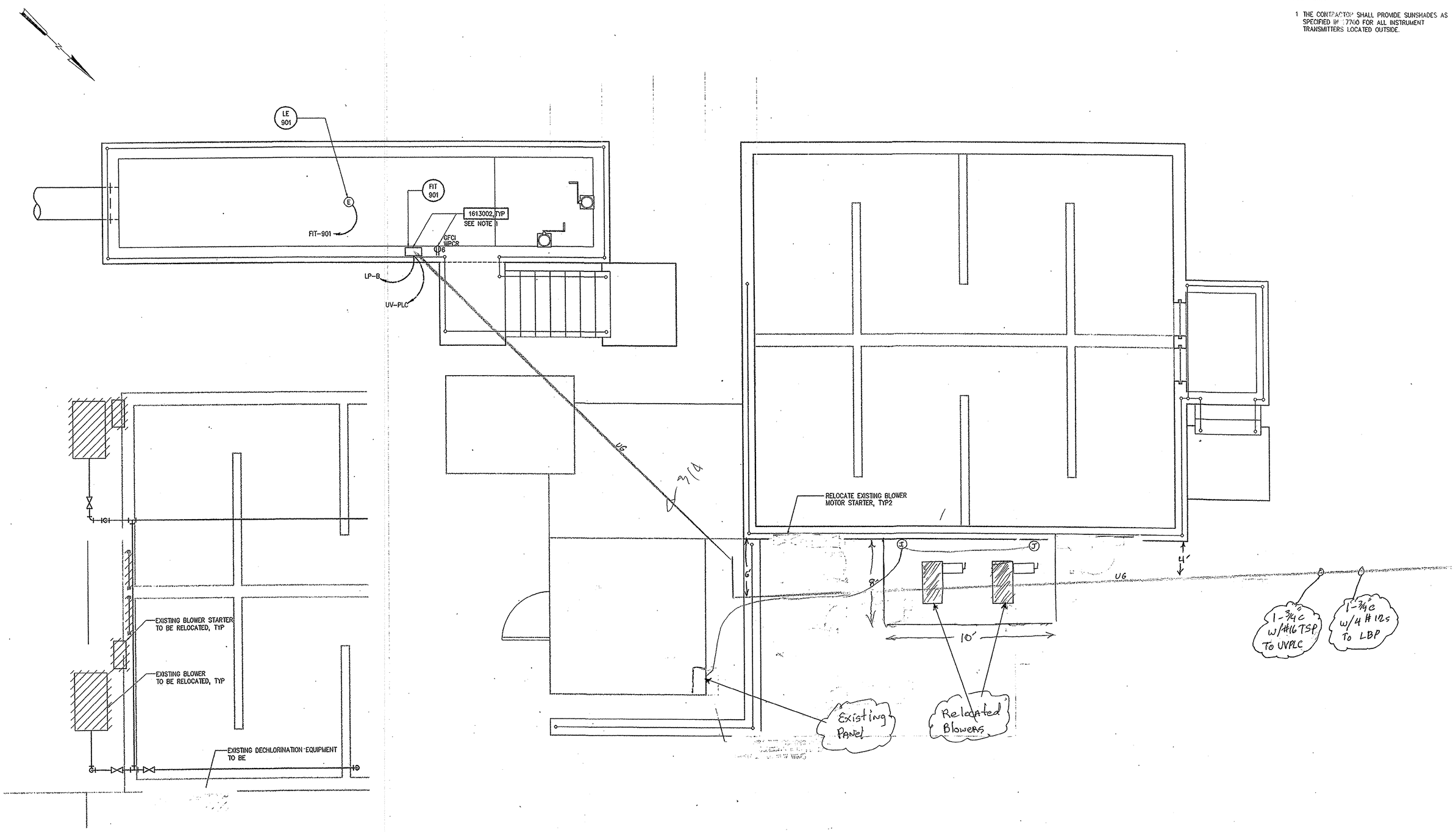

TOP DEMOLITION PLAN

3/8"= 1'-0"

TOP PLAN

3/8"= 1'-0"

NO.	ISSUED FOR	DATE	BY
2	CONSTRUCTION	11/16/01	JBM
1	REGULATORY APPROVAL	8-31-01	JBM

DESIGNED JLH
DRAWN JLH
CHECKED
PROJ. ENGR. JBM
APPROVED

SOUTH CAROLINA REGISTERED PROFESSIONAL ENGINEER No.16512 RONALD L. TAYLOR 11/16/01

SOUTH CAROLINA REGISTERED PROFESSIONAL ENGINEER No.10488 JOSEPH B. MEEKS 11/16/01

SOUTH CAROLINA REGISTERED PROFESSIONAL ENGINEER No. RONALD J. RATASKY 11/15/01

HAZEN AND SAWYER
Environmental Engineers & Scientists
4011 WestChase Blvd, Raleigh, North Carolina 27607

GRAND STRAND WATER AND SEWER AUTHORITY
SOUTH CAROLINA

CONWAY WWTP
4.0 MGD EXPANSION AND UPGRADE

POST AERATION TANK MODIFICATIONS
ELECTRICAL
TOP PLAN

THE SCALE BAR SHOWN BELOW MEASURES ONE INCH LONG ON THE ORIGINAL DRAWING.

DATE AUGUST 2001
H & S JOB NUMBER 30631
CONTRACT NUMBER 1
DRAWING NUMBER E300
H&S FLAT FILE NO. 56

11/15/01 9:34am FILE= H:\30631\ELEC\E300 by ADMINISTRATOR XREF's=MISC_30631-TB, 300\DC-PT,

35-004-065

PP-B

480 VOLTS
3Ø, 3 WIRE

TYPE: NQOD
MOUNT: SURFACE

MAIN LUG
225 A 3 P

DESCRIPTION	WIRE	CKT BKR TRIP	CKT BKR POLE	CKT BKR NO	VOLT AMPERE ØA	VOLT AMPERE ØB	VOLT AMPERE ØC	VOLT AMPERE ØA	VOLT AMPERE ØB	VOLT AMPERE ØC	CKT BKR NO	CKT BKR POLE	CKT BKR TRIP	WIRE	DESCRIPTION
Influent Weir 1 + 2	1	20	3	1	1000			500			2	3	20	1	Panel LP-C 50 KVA TRANSFORMER
				3		1000			500		4				
				5			1000			500	6				
Effluent Weir 1C + 1D	1	20	3	7	1000			1000			8	3	20	1	Influent Weir 3
				9		1000			1000		10				
				11			1000			1000	12				
Effluent Weir 2A - 2B	1	20	3	13	1000			1000			14	3	20	1	Effluent Weir 1A - 1B
				15		1000			1000		16				
				17			1000			1000	18				
	2	30	3	19	15000			21910			20	2	125	3	Effluent WEIR 2C + 2D
				21		15000			23170		22				
				23			15000			0	24				
		20	3	25							26	3	20		
				27							28				
				29							30				
		20	3	31							32	3	20		
				33							34				
				35							36				
Headworks		20	3	37							38	3	20		
				39							40				
				41							42				
				TOTAL	18000	18000	18000	25670	24410	2500	TOTAL				
					PHASE TOTAL			TOTAL LOAD							
					43670	42410	20500	106580							

LP-C

120/240 VOLTS
1Ø, 3 WIRE

TYPE: NQOD
MOUNT: SURFACE

MAIN BKR
225 A 2 P

DESCRIPTION	WIRE	CKT BKR TRIP	CKT BKR POLE	CKT BKR NO	VOLT AMPERE ØA	VOLT AMPERE ØB	VOLT AMPERE ØA	VOLT AMPERE ØB	CKT BKR NO	CKT BKR POLE	CKT BKR TRIP	WIRE	DESCRIPTION
Elect. Rm. Lights	6	20	1	1	300		1000		2	1	20	6	
Recept. building	6	20	1	3		680		500	4	1	20	6	Level Probe 1 + 2
	6	20	1	5	200		600		6	1	20	6	
	6	20	1	7		200		600	8	1	20	6	Outside Lights
	6	20	1	9	100		600		10	1	20	6	
	5	30	2	11		4000		4000	12	2	30	5	Kruger Panel
	5	30	2	13	4000		4000		14	2	30		
	5	30	2	15		4000		680	16	1	20	6	LC-1
		30	2	17	4000		200		18	1	20	6	LC-1
	6	20	1	19		200		2000	20	2	30	5	LC-1
Air Conditioner	6	20	2	21	1530		2000		22	2	30	5	LC-1
Air Conditioner	6	20	2	23		1530		700	24	1	20	6	LC-1
Heat + Air	5	30	2	25	1680		100		26	1	20	6	LC-1
Heat + Air	5	30	2	27		1680		100	28	1	20	6	
Headworks Para Meter	6	20	1	29	100		100		30	1	20	6	Recept
	6	20	1	31		100		1200	32	1	20	6	D.O. Analizers
Eff. Level Probe	6	20	1	33	1200		200		34	1	20	6	Headworks Recept
Mag. Meter W.A.S. 1	6	20	1	35		200		800	36	1	20	5	Level Probe 3
Head Works Flow Meter		20	1	37					38	1	20		Recept
Mag. Meter W.A.S. 2		20	1	39					40	1	20		Recept
		20	1	41					42	1	20		
				TOTAL	13110	12590	8800	10580	TOTAL				
					PHASE TOTAL		TOTAL LOAD						
					21910	23170	45080						

NOTES:

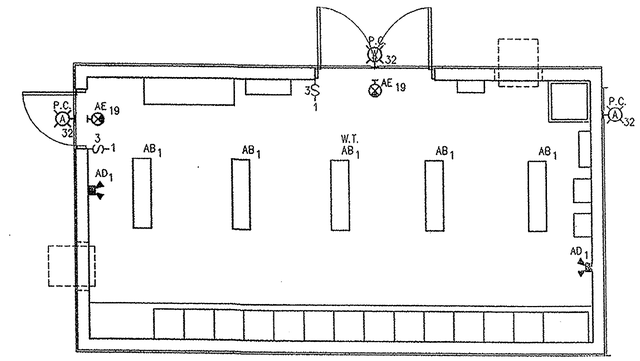

TOP LIGHTING PLAN

1/4"=1'-0"

CONDUIT AND WIRE LEGEND

(NUMBERS REFERENCE THIS SHEET ONLY)

NO.	DESCRIPTION
1	3#12, #12GND, 1"C
2	3#8, #10GND, 1"C
3	2#1/0, #6GND, 2"C
4	16#14, #14GND, 2"C
5	2#10, #10GND, 1"C
6	2#12, #12GND, 1"C
7	2#2, #6GND, 2"C
8	2#250, #4GND, 2"C

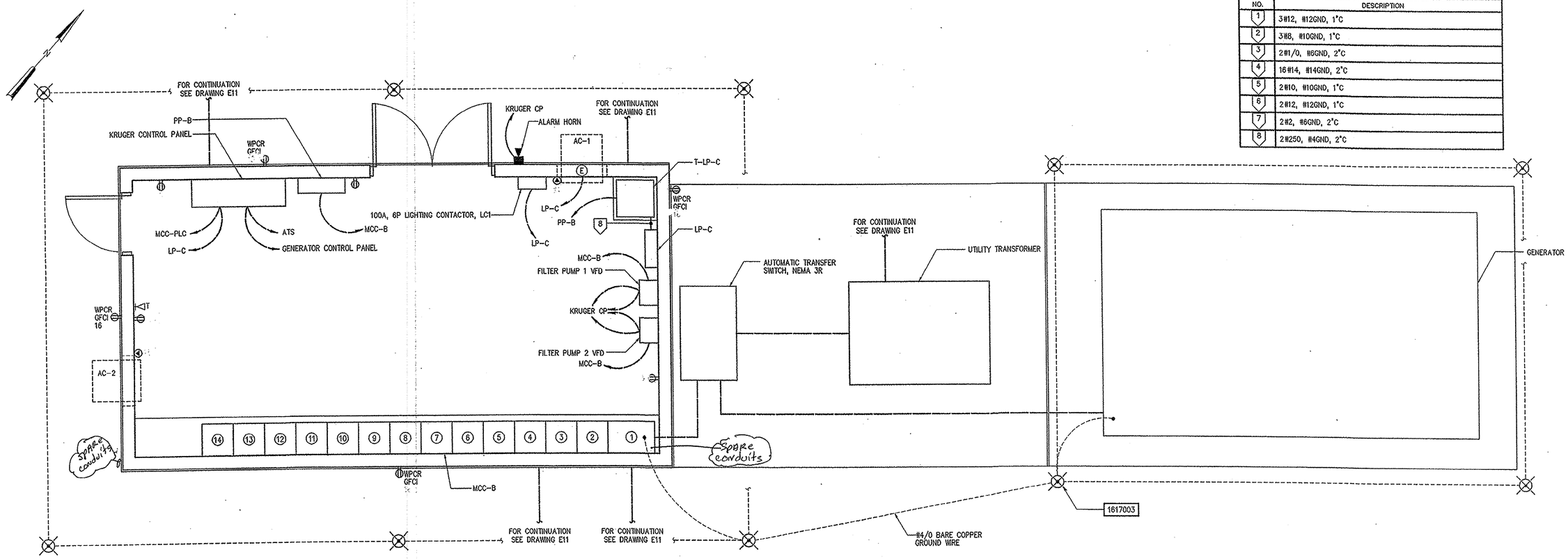

TOP POWER PLAN

3/8"=1'-0"

NO.	ISSUED FOR	DATE	BY
2	CONSTRUCTION	11/16/01	JBM
1	REGULATORY APPROVAL	8-31-01	JBM

DESIGNED JLH
DRAWN JLH
CHECKED JM
PROJ. ENGR. JBM
APPROVED

SOUTH CAROLINA PROFESSIONAL ENGINEER No.16512 RONALD L. TAYLOR 11/16/01

SOUTH CAROLINA REGISTERED PROFESSIONAL ENGINEER No.10488 JOSEPH B. MEEKS 11/16/01

SOUTH CAROLINA REGISTERED PROFESSIONAL ENGINEER No.17210 DAVID J. RATASKY 11/15/01

HAZEN AND SAWYER
Environmental Engineers & Scientists
4011 WestChase Blvd, Raleigh, North Carolina 27607

GRAND STRAND WATER AND SEWER AUTHORITY
SOUTH CAROLINA

CONWAY WWTP
4.0 MGD EXPANSION AND UPGRADE

NEW ELECTRICAL BUILDING
ELECTRICAL
PLAN AND SCHEDULES

THE SCALE BAR SHOWN BELOW MEASURES ONE INCH LONG ON THE ORIGINAL DRAWING.

DATE AUGUST 2001
H & S JOB NUMBER 30631
CONTRACT NUMBER 1
DRAWING NUMBER E400
H&S FLAT FILE NO. 56

11/15/01 9:54am FILE= H:\30631\ELEC\E400 by ADMINISTRATOR XREFs=MISC\30631-TB, 400\elec-pt.

35-004-066

NOTES:

1. LP-B IS LOCATED AT THE UV DISINFECTION TANK. SEE DRAWING E200.
2. STUB OUT AND CAP SPARE CONDUIT OUTSIDE OF BUILDING.

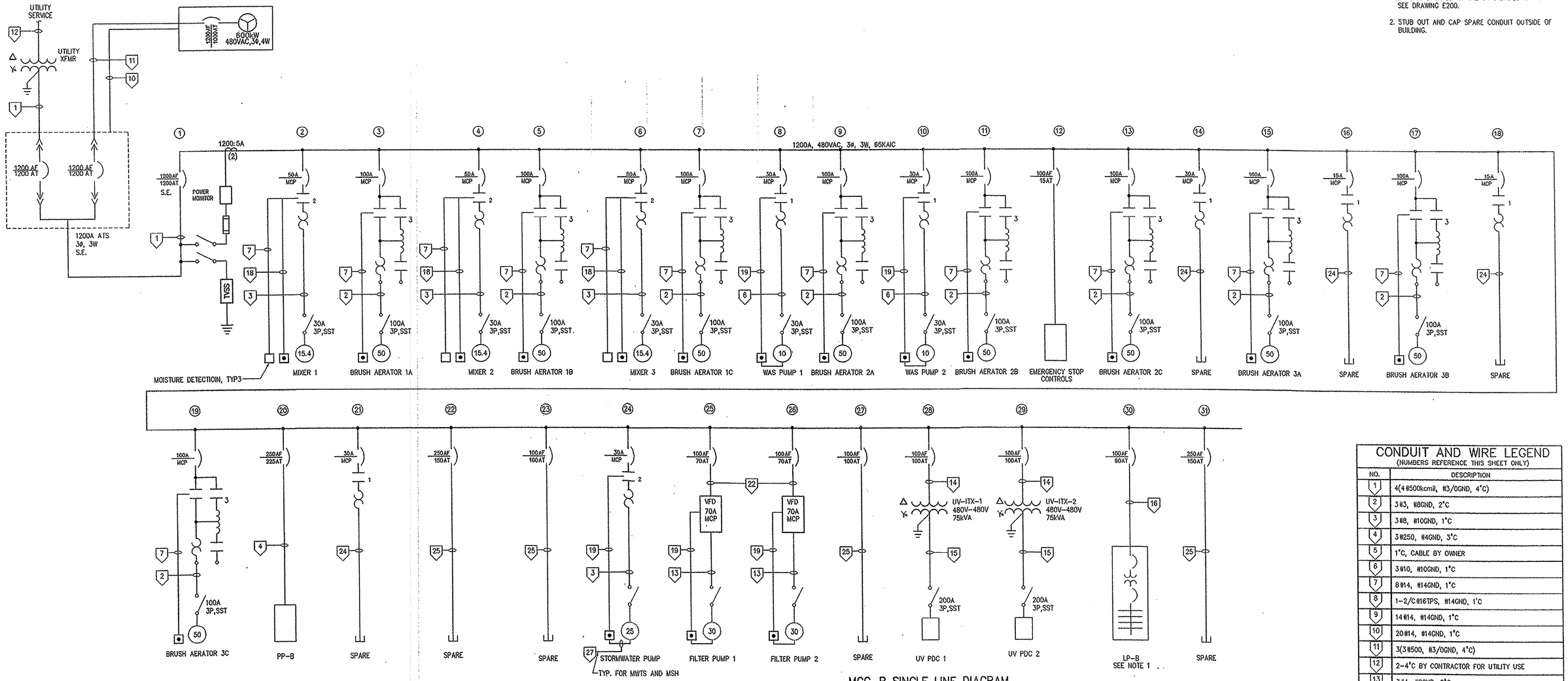

MCC-B SINGLE LINE DIAGRAM

CONDUIT AND WIRE LEGEND (NUMBERS REFERENCE THIS SHEET ONLY)	
NO.	DESCRIPTION
1	4(4#500kcmil, #3/0GND, 4"C)
2	3#3, #8GND, 2"C
3	3#8, #10GND, 1"C
4	3#250, #4GND, 3"C
5	1"C, CABLE BY OWNER
6	3#10, #10GND, 1"C
7	8#14, #14GND, 1"C
8	1-2/C#16TPS, #14GND, 1"C
9	14#14, #14GND, 1"C
10	20#14, #14GND, 1"C
11	3(3#500, #3/0GND, 4"C)
12	2-4"C BY CONTRACTOR FOR UTILITY USE
13	3#4, #8GND, 2"C
14	3#1, #6GND, 2"C
15	3#2, #2N, #6GND, 2"C
16	2#4, #8GND, 2"C
17	FIBER OPTIC CABLE, 2"C
18	10#14, #14GND, 1"C
19	8#14, 2#12, #12, 1"C
20	2-2/C#16TPS, 1"C
21	1"C, CABLE BY SUPPLIER
22	3#4, #8GND, 2"C
23	1"C, SERIAL CABLE BY OWNER
24	1-1"SP.C SEE NOTE 2
25	1-2"SP.C SEE NOTE 2
26	NETWORK CABLE, 1"C
27	2#12, 2#14, #12GND, 3/4"C

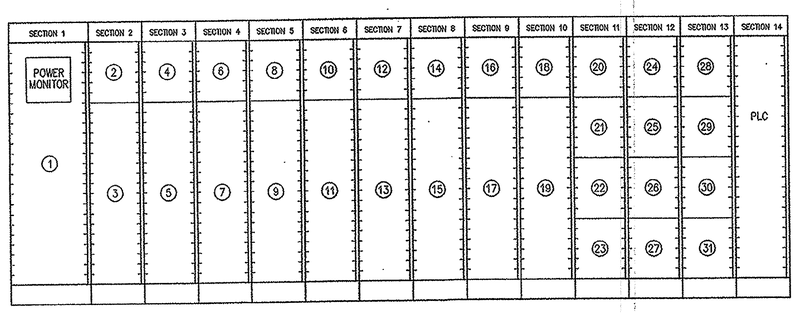

MCC-B ELEVATION

NTS

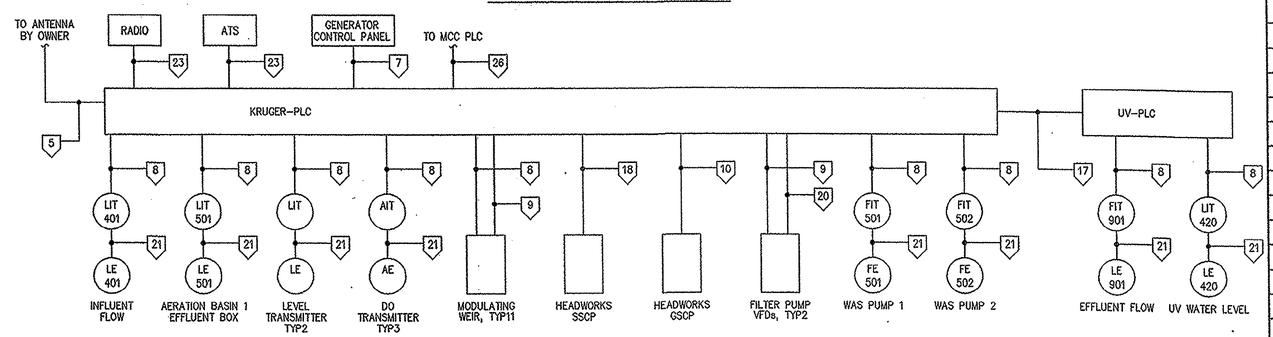

CONTROL SYSTEM ONE-LINE DIAGRAM

NO.	ISSUED FOR	DATE	BY
2	CONSTRUCTION	11/16/01	JBM
1	REGULATORY APPROVAL	8-31-01	JBM

DESIGNED JLH
DRAWN JLH
CHECKED
PROJ. ENGR. JBM
APPROVED

SOUTH CAROLINA REGISTERED PROFESSIONAL ENGINEER No. 18512 RONALD L. TAYLOR 11/16/01

SOUTH CAROLINA REGISTERED PROFESSIONAL ENGINEER No. 10488 HERSCHEL B. MEEKS JR. 11/16/01

SOUTH CAROLINA REGISTERED PROFESSIONAL ENGINEER No. 17201 RONALD J. RATASKY 11/15/01

HAZEN AND SAWYER
Environmental Engineers & Scientists
4011 WestChase Blvd, Raleigh, North Carolina 27607

GRAND STRAND WATER AND SEWER AUTHORITY
SOUTH CAROLINA

CONWAY WWTP
4.0 MGD EXPANSION AND UPGRADE

NEW ELECTRICAL BUILDING
ELECTRICAL
MCC-B SINGLE LINE DIAGRAM

THE SCALE BAR SHOWN BELOW MEASURES ONE INCH LONG ON THE ORIGINAL DRAWING.

DATE AUGUST 2001
H & S JOB NUMBER 30631
CONTRACT NUMBER 1
DRAWING NUMBER E401
H&S FLAT FILE NO. 56

11/15/01 9:54am FILE= H:\30631\ELEC\E401 by ADMINISTRATOR XREFS=WESC\30631-TB,

35-004-067

NOTES:

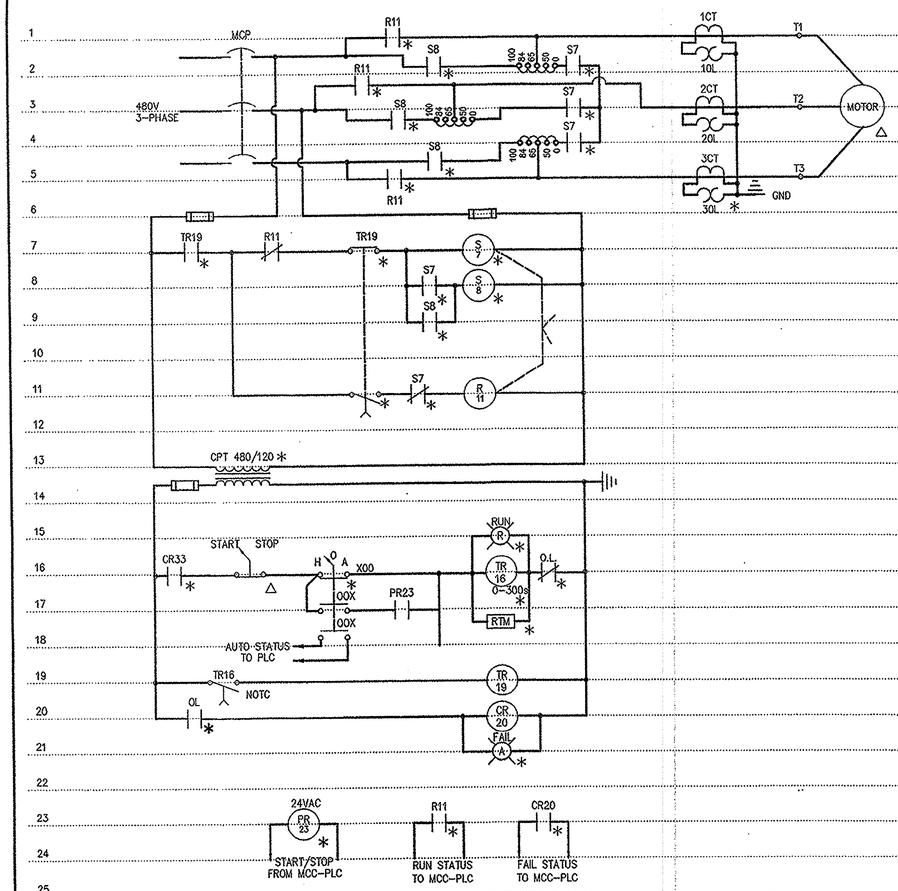

ELEMENTARY CONTROL SCHEMATIC FOR BRUSH AERATOR 1A

(TYPICAL FOR 1B, 1C, 2A, 2B, 2C, 3A, 3B, 3C)

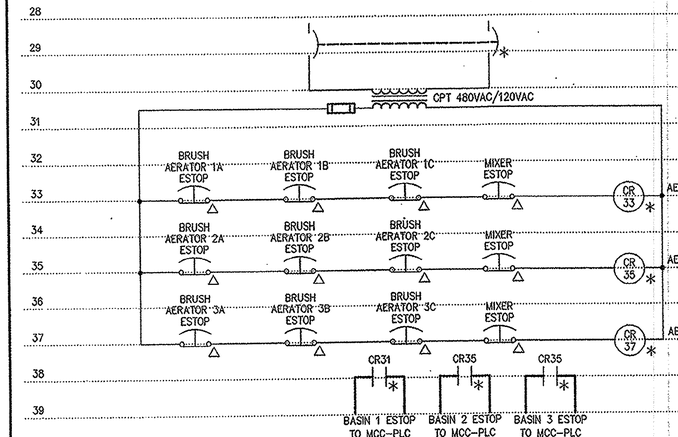

EMERGENCY STOP CONTROL SCHEMATIC

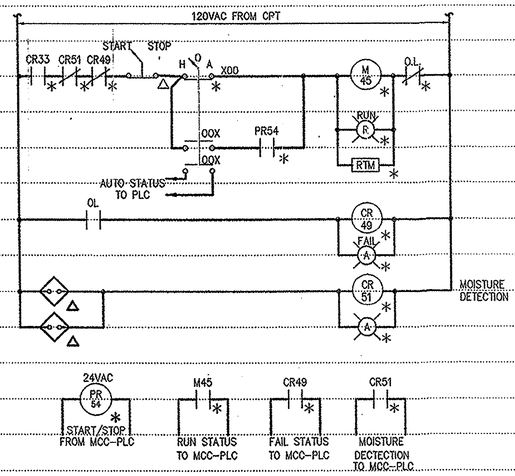

ELEMENTARY CONTROL SCHEMATIC FOR SUBMERSIBLE MIXERS 1-3

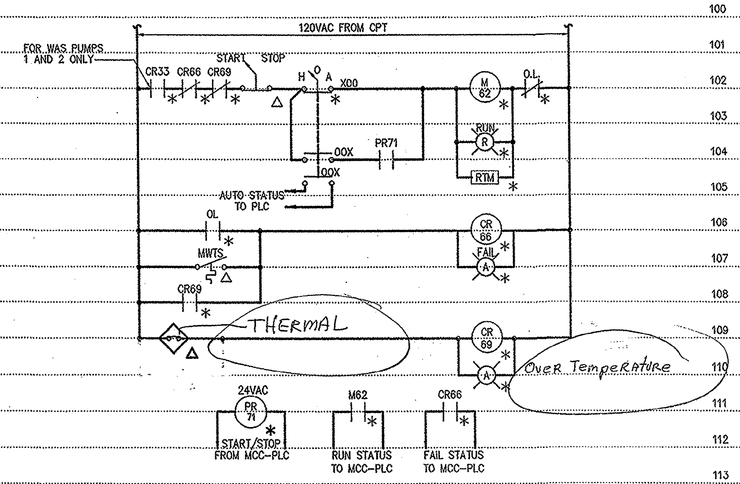

ELEMENTARY CONTROL SCHEMATIC FOR WAS PUMPS 1 & 2 AND STORMWATER PUMP

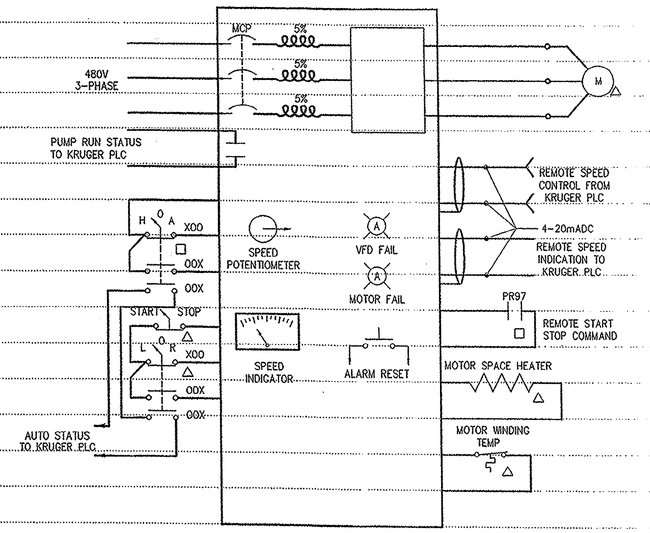

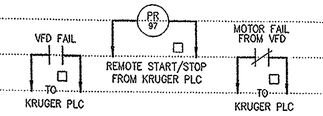

ELEMENTARY CONTROL SCHEMATIC FOR FILTER PUMPS 1 AND 2

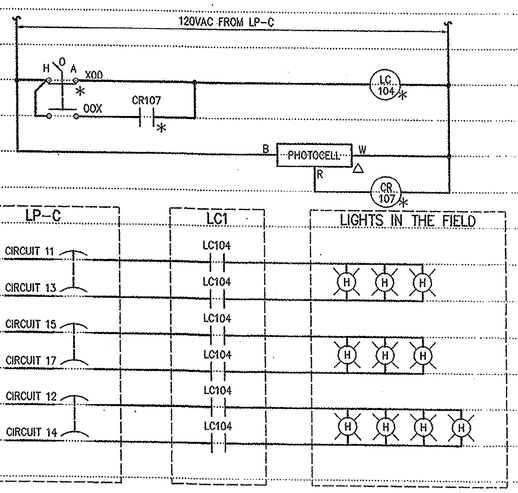

LIGHTING CONTACTOR LC1 CONTROL SCHEMATIC

NO.	ISSUED FOR	DATE	BY
2	CONSTRUCTION	11/16/01	JBM
1	REGULATORY APPROVAL	8-31-01	JBM

DESIGNED JLH
DRAWN JLH
CHECKED JM
PROJ. ENGR. JBM
APPROVED

SOUTH CAROLINA REGISTERED PROFESSIONAL ENGINEER No.16512 RONALD L. TAYLOR 11/14/01

SOUTH CAROLINA REGISTERED PROFESSIONAL ENGINEER No.10488 JOSEPH B. MEEKS JR. 11/16/01

SOUTH CAROLINA REGISTERED PROFESSIONAL ENGINEER No.17210 RONALD J. RATASKY 11/15/01

HAZEN AND SAWYER
Environmental Engineers & Scientists
4011 WestChase Blvd, Raleigh, North Carolina 27607

GRAND STRAND WATER AND SEWER AUTHORITY
SOUTH CAROLINA

CONWAY WWTP
4.0 MGD EXPANSION AND UPGRADE

NEW ELECTRICAL BUILDING
ELECTRICAL
SCHEMATICS AND CONTROL DIAGRAM

THE SCALE BAR SHOWN BELOW MEASURES ONE INCH LONG ON THE ORIGINAL DRAWING.

DATE AUGUST 2001
H & S JOB NUMBER 30631
CONTRACT NUMBER 1
DRAWING NUMBER E402
H&S FLAT FILE NO. 56

11/15/01 9:53am FILE= H:\30631\ELEC\E402 by ADMINISTRATOR XREFs=MISC\30631-TB,

35-004-068

8-28-02 RJY

STEELE-PRYOR INC.

GRANDSTRAND AT CONWAY

1. We need dimensions for the following items
   A. 50 KVA transformer.
   B. 2 - 75KVA transformers.
   C. 30Amp disconnects.
   D. 100Amp disconnects
   E. 2-200Amp disconnects
2. Is PANEL LP-B the mini power zone?
3. Where is the Existing ANTENNA to be Located? conduit to see I1
4. Where is the Radio Located? conduit to. See E-401
5. Please select A location for the spare conduits entering the New electrical building.
6. The door NEAR KRUGER panel needs to clear the PANEL depth.
7. The A.C. can not enter our clear working space.
8. Has the electrical building been moved Exactly where is it?
9. The stainless steel W bolts for fastening channel to handrails, I Recieved. A sample is for approval.
10. The transformer pad detail is attached.
11. As per the KRUGER drawings the ANALOG signal for the blowers I WAS left out of the electrical plans.

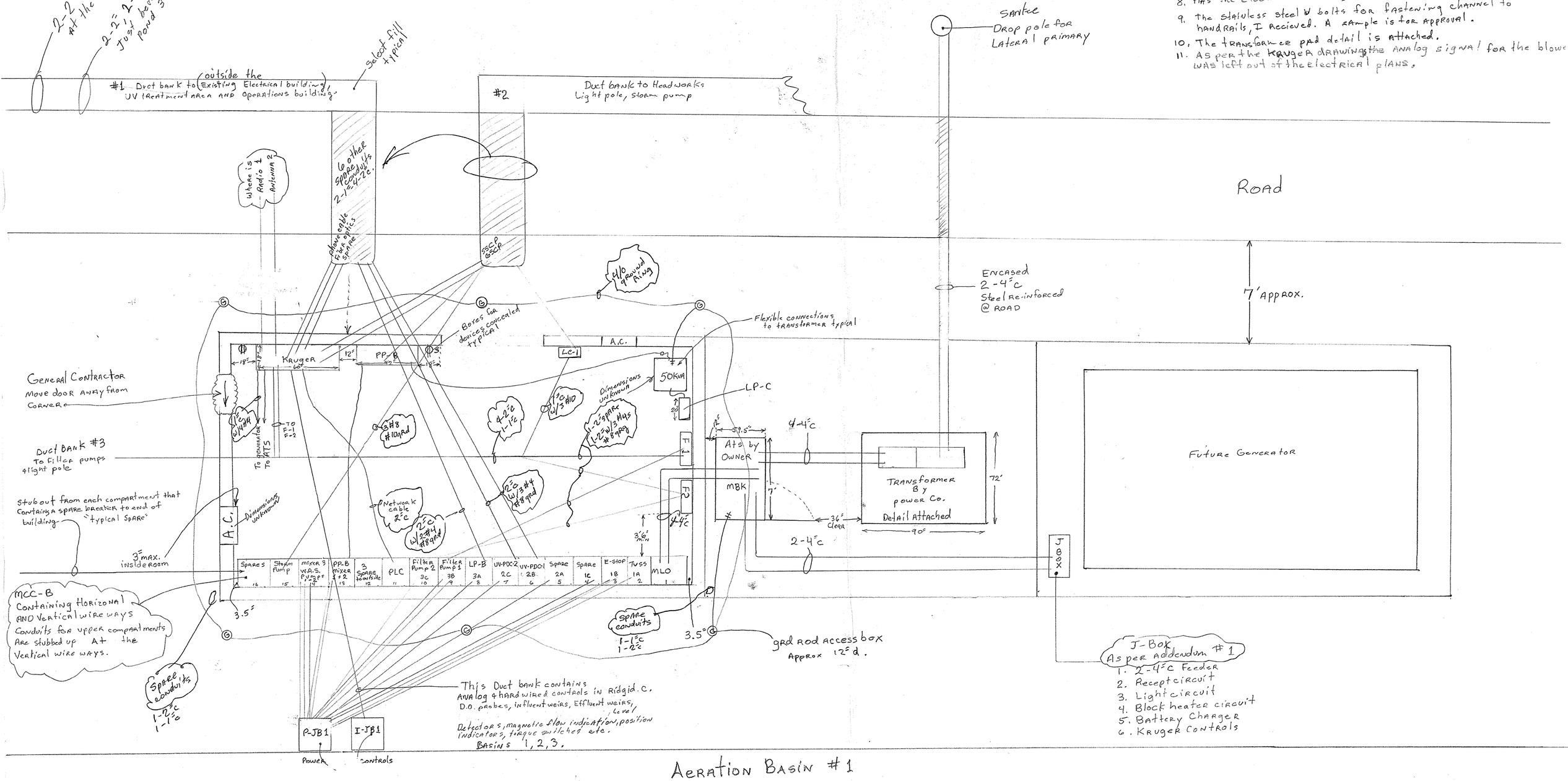

Aeration Basin #1

35-004-069