MODIFICATIONS

TO THE

J. LAMBERT SCHWARTZ WASTEWATER TREATMENT PLANT

CONWAY, SOUTH CAROLINA

THE GRAND STRAND WATER AND SEWER AUTHORITY

GRAND STRAND WATER & SEWER AUTHORITY

LOCATION MAP

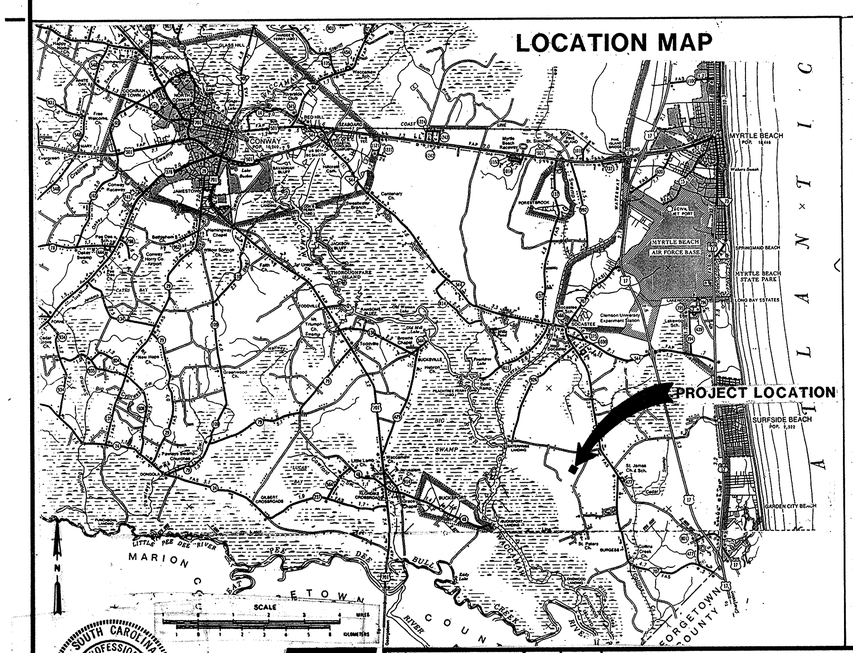

ABBREVIATIONS

ALP	LOW PRESSURE AIR	H_2O_2	HYDROGEN PEROXIDE
BM	BEAM	INV (INVT)	INVERT
BOT (BOTT)	BOTTOM	LG	LONG
CHKR	CHECKERED	MAX	MAXIMUM
℄	CENTER LINE	MC	MEDIUM CURE
Cl_2	CHLORINE	MFR	MANUFACTURER
CLR	CLEAR	MGD	MILLION GALLONS PER DAY
CMU	CONCRETE MASONRY UNIT	MIN	MINIMUM
COL	COLUMN	MJ	MECHANICAL JOINT
CONC	CONCRETE	OC	ON CENTER
CONT	CONCRETE	OPNG	OPENING
COR	CORNER	PE	PLAIN END
CS	CHLORINE SOLUTION	PL	PLATE
CTR	CENTER	PVC	POLYVINYL CHLORIDE PIPE
CTRSK	COUNTERSUNK	RBC	ROTATING BIOLOGICAL CONTACTOR
DET	DETAIL	RC	RAPID CURE
DIA (d)	DIAMETER	RDCR	REDUCER
DIAG	DIAGONAL	REINF	REINFORCING STEEL
DIM	DIMENSION	REQD	REQUIRED
DIP	DUCTILE IRON PIPE	SCRW	SCREW
DWG	DRAWING	SIM	SIMILAR
EA	EACH	SPA (SPG)	SPACING
ECC	ECCENTRIC	SST	STAINLESS STEEL
EF	EACH FACE	STL	STEEL
EJ	EXPANSION JOINT	TS	TUBE STEEL
EL (ELEV)	ELEVATION	TYP	TYPICAL
EQL	EQUAL	VERT	VERTICAL
EW	EACH WAY	W/	WITH
EXST	EXISTING	WL	WATER LEVEL
FIG	FIGURE	WS	WATER STOP
GA	GAUGE		
GALV	GALVANIZED		
GPM	GALLONS PER MINUTE		

(ADDITIONAL ABBREVIATIONS ON DWG. E-1)

DRAWING INDEX

DRAWING NO.	TITLE
G-1	TITLE SHEET, LOCATION MAP, DRAWING INDEX, AND ABBREVIATIONS
G-2	PROCESS SCHEMATIC, HYDRAULIC PROFILE
G-3	MECHANICAL LEGEND
C-1	SITE PLAN
S-1	PREAERATION BASIN FOUNDATION PLAN
S-2	PREAERATION BASIN TOP PLAN
S-3	PREAERATION BASIN SECTIONS AND DETAILS
S-4	PREAERATION BASIN SECTIONS AND DETAILS
M-1	PREAERATION BASIN PLAN
M-2	PREAERATION BASIN SECTIONS AND DETAILS
M-3	ROTATING BIOLOGICAL CONTACTOR/HEADWORKS MODIFICATIONS
M-4	CHLORINATION BUILDING MODIFICATIONS
E-1	ELECTRICAL DETAILS AND LEGEND
E-2	SINGLE LINE AND MOTOR CONTROL DIAGRAMS
E-3	PREAERATION BASIN AND BLOWER FACILITY ELECTRICAL PLAN
E-4	ELECTRICAL PLAN AND EQUIPMENT ELEVATIONS
E-5	WIRING DIAGRAMS AND SCHEDULES
D-1	STRUCTURAL STANDARD DETAILS
D-2	STRUCTURAL STANDARD DETAILS
D-3	MECHANICAL STANDARD DETAILS

7-05-001-S

SOUTH CAROLINA REGISTERED PROFESSIONAL ENGINEER RICHARD A. HIRSEKORN

CH2M HILL

DSGN	R.J. PUCCIA
DR	T. HODGES/R. GILKESON
CHK	T.L. BELSER
APVD	R.A. HIRSEKORN

NO.	DATE	REVISION	BY	APVD

REUSE OF DOCUMENTS
THIS DOCUMENT, AND THE IDEAS AND DESIGNS INCORPORATED HEREIN, AS AN INSTRUMENT OF PROFESSIONAL SERVICE, IS THE PROPERTY OF CH2M HILL AND IS NOT TO BE USED, IN WHOLE OR IN PART, FOR ANY OTHER PROJECT WITHOUT THE WRITTEN AUTHORIZATION OF CH2M HILL.
©CH2M HILL

VERIFY SCALES
BAR IS ONE INCH ON ORIGINAL DRAWING.
0 1"
IF NOT ONE INCH ON THIS SHEET, ADJUST SCALES ACCORDINGLY.

MODIFICATIONS TO THE J. LAMBERT SCHWARTZ WWTP
THE GRAND STRAND WATER AND SEWER AUTHORITY

TITLE SHEET, LOCATION MAP, DRAWING INDEX, AND ABBREVIATIONS

DWG NO. G-1
DATE AUG 1985
PROJ NO. SA19793.A0

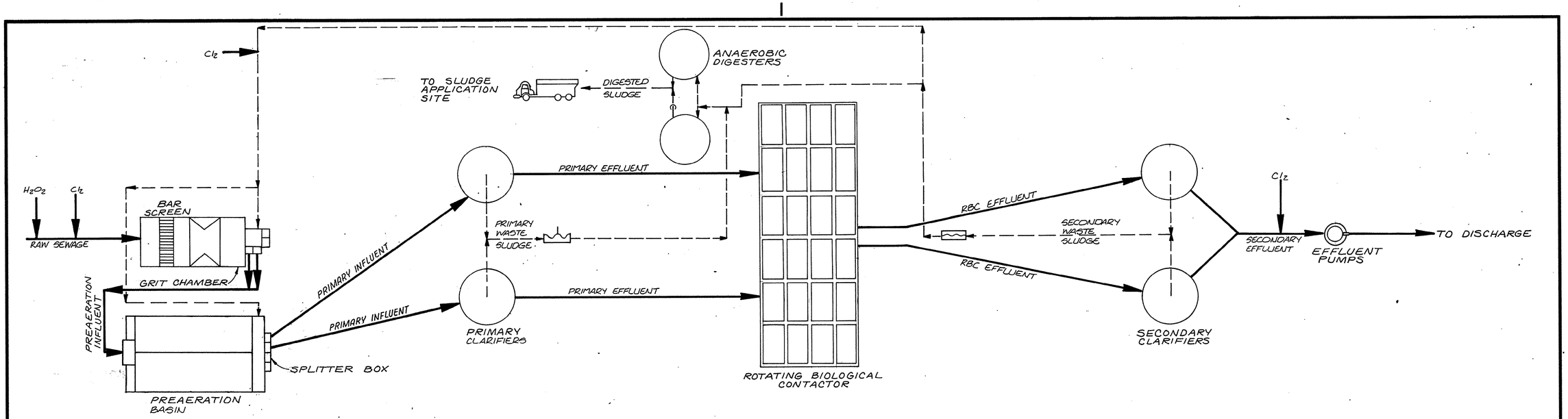

PROCESS SCHEMATIC

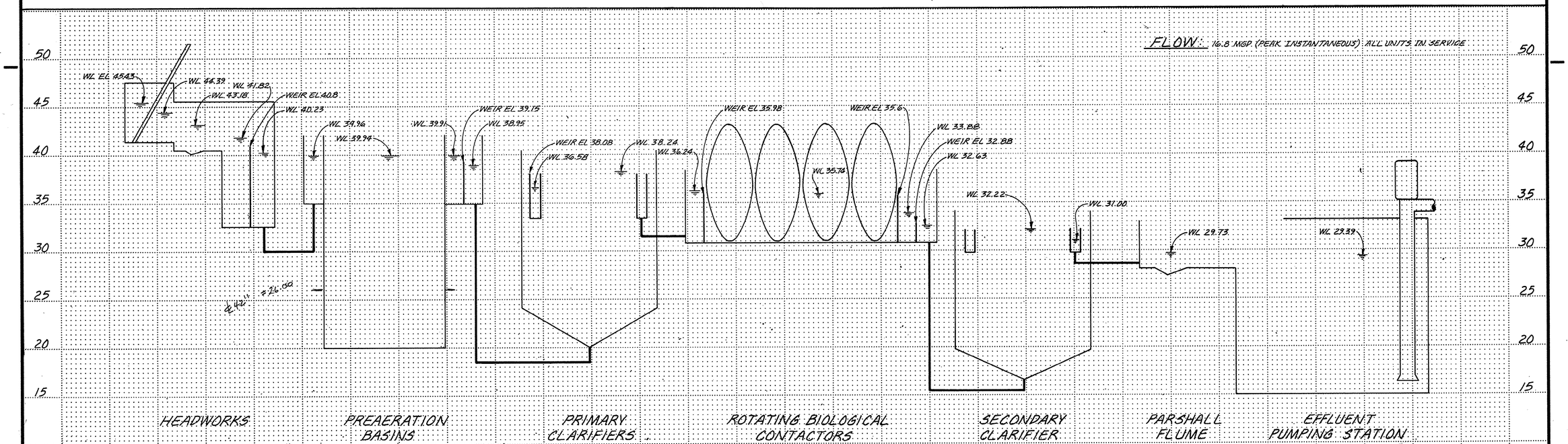

HYDRAULIC PROFILE

7-05-002-S

DSGN R.J. PUCCIA
DR R.A. GILKESON
CHK T.L. BELSER
APVD R.A. HIRSEKORN

NO.	DATE	REVISION	BY	APVD

REUSE OF DOCUMENTS
THIS DOCUMENT, AND THE IDEAS AND DESIGNS INCORPORATED HEREIN, AS AN INSTRUMENT OF PROFESSIONAL SERVICE, IS THE PROPERTY OF CH2M HILL AND IS NOT TO BE USED, IN WHOLE OR IN PART, FOR ANY OTHER PROJECT WITHOUT THE WRITTEN AUTHORIZATION OF CH2M HILL.
©CH2M HILL

VERIFY SCALES
BAR IS ONE INCH ON ORIGINAL DRAWING.
0 1"
IF NOT ONE INCH ON THIS SHEET, ADJUST SCALES ACCORDINGLY.

MODIFICATIONS TO THE J. LAMBERT SCHWARTZ WWTP
THE GRAND STRAND WATER AND SEWER AUTHORITY

PROCESS SCHEMATIC, HYDRAULIC PROFILE

DWG NO. G-2
DATE AUG 1985
PROJ NO. SA19793.A0

PIPE AND FITTING SYMBOLS

DOUBLE LINE SINGLE LINE

- EXISTING PIPE
- NEW PIPE
- EXISTING PIPE TO BE ABANDONED
- EXISTING PIPE TO TO BE REMOVED
- WELDED JOINT
- FLANGED JOINT
- MECHANICAL JOINT
- BELL & SPIGOT JOINT
- HUB & SPIGOT JOINT (RUBBER GASKET)
- BALL JOINT
- FLANGE COUPLING ADAPTOR
- FLEXIBLE COUPLING
- FLEXIBLE COUPLING WITH THRUST TIES
- STEEL BELLOWS EXP JOINT
- ELASTOMER BELLOWS EXP JOINT
- ELBOW UP
- ELBOW DOWN
- TEE UP
- TEE DOWN
- LATERAL UP
- LATERAL DOWN
- CONCENTRIC REDUCER
- ECCENTRIC REDUCER
- UNION
- CAP
- ANCHOR
- ELBOW, 90 DEGREE
- CROSS
- TEE
- ELBOW, 45 DEGREE
- LATERAL

NOTES:

1. ONLY FLANGED END CONNECTIONS ARE SHOWN HERE FOR DOUBLE LINE FITTINGS. FITTINGS WITH OTHER END PATTERNS ARE SHOWN SIMILARLY ON THE CONSTRUCTION DRAWINGS. ALSO SEE PIPING SPECIFICATIONS.
2. SYMBOLS SHOWN HERE FOR SINGLE LINE FITTINGS ARE GENERIC ONLY. REFER TO PIPING SPECIFICATIONS FOR SPECIFIC END CONNECTIONS FOR SINGLE LINE PIPE AND FITTINGS.
3. EXISTING PIPING AND EQUIPMENT IS SHOWN LIGHT-LINED AND/OR SCREENED AND IS ALWAYS NOTED AS EXISTING. NEW PIPING AND EQUIPMENT IS SHOWN HEAVY-LINED.

GATE SYMBOLS

EL.VIEW — PLAN VIEW

- SLUICE
- FABRICATED SLIDE

SITE LEGEND

- FENCE
- EXISTING STRUCTURE TO BE REMOVED
- EXISTING A.C. PAVEMENT
- NEW A.C. PAVEMENT
- CONCRETE WALK (EXISTING SCREENED)
- 10 — EXISTING CONTOUR
- 10 — NEW CONTOUR
- 4:1 — EXISTING EMBANKMENT - SLOPE AS INDICATED
- 3:1 — NEW EMBANKMENT - SLOPE AS INDICATED
- × 1000 — EXISTING GRADE
- ⊗ 1000 — FINISH GRADE

NOTE: IN GENERAL, EXISTING STRUCTURES AND FACILITIES ARE NOTED AS "EXISTING" AND ARE SHOWN IN LIGHT LINE WEIGHTS, OR AS SCREENED BACKGROUND. NEW STRUCTURES ARE SHOWN IN HEAVY LINE WEIGHTS.

VALVE SYMBOLS

- GATE
- BUTTERFLY
- GLOBE
- BALL
- SEAT PORT
- ECCENTRIC PLUG
- PLUG OR COCK
- DIAPHRAGM
- PINCH
- SWING CHECK
- BALL CHECK
- HOSE VALVE (HV- X) OR (V-X) X = NO. IN SPECS
- MUD
- PRESSURE RELIEF
- AIR AND/OR VACUUM RELEASE
- REGULATED SIDE
- PRESSURE CONTROL
- MULTI-PORT VALVE (BALL VALVE SHOWN. FOR OTHER VALVE TYPES, APPROPRIATE VALVE SYMBOL SHOWN.) ARROWS INDICATE FLOW PATTERN. SEAT PORTS ARE IMPLIED BY INDICATED FLOW PATTERN.
- NON-FREEZE HOSE VALVE (V-X) X = NO. IN SPECIFICATIONS
- NON-FREEZE HOSE VALVE WITH HOSE RACK (V-X) X = NO. IN SPECIFICATIONS
- K — KNIFE GATE

SELF CONTAINED VALVE & EQUIPMENT TAG NUMBERS

D-W-X-Y

D:
- P = PUMP
- T = TANK
- M = MECHANICAL EQUIPMENT
- G = GATE
- E = EJECTOR
- PSE = RUPTURE DISK
- ARV = AIR RELEASE VALVE
- AVRV = AIR AND VACUUM RELEASE VALVE
- PSV = PRESSURE RELIEF VALVE
- PCV = PRESSURE CONTROL VALVE
- LCV = LEVEL CONTROL VALVE
- TCV = TEMPERATURE CONTROL VALVE
- VRV = VACUUM RELEASE VALVE

W = UNIT PROCESS NUMBER
X = LOOP NUMBER
Y = UNIT NUMBER

PIPING DESIGNATION

EXAMPLE:

16" RAS — RAS 16"

- PIPE USE IDENTIFICATION LEGEND
- NOMINAL PIPE DIAMETER

VALVE DESIGNATIONS

MANUAL VALVES AND CHECK VALVES

8"-V500

- SIZE OF VALVE
- VALVE DESIGNATION
- VALVE TYPE, SEE SPECIFICATIONS

CONTROL VALVES

- FLOW DIRECTION
- VALVE SYMBOL

*BUBBLE WITH XV OR XCV DESIGNATION SHOWN ON P&ID WHERE: X = PROCESS VARIABLE

SECTION (LETTER) OR DETAIL (NUMERAL) DESIGNATION — A — **ON DRAWING WHERE SECTION OR DETAIL IS TAKEN:** SHEET NUMBER WHERE SHOWN

21-M-2

SHEET NUMBER (REPLACED WITH A LINE IF TAKEN AND SHOWN ON SAME SHEET) — **ON DRAWING WHERE SECTION OR DETAIL IS SHOWN:** SHEET NUMBER(S) WHERE TAKEN

DETAIL AND SECTION DESIGNATION

7-05-003-S

THIS IS A STANDARD LEGEND. THEREFORE, NOT ALL OF THIS INFORMATION MAY BE USED ON THIS PROJECT.

REGISTERED PROFESSIONAL ENGINEER — STATE OF SOUTH CAROLINA — RICHARD A. HIRSEKORN

CH2M HILL

DSGN	V. BATES
DR	H. HOLLOWAY
CHK	V. BATES
APVD	R.A. HIRSEKORN

NO.	DATE	REVISION	BY	APVD

REUSE OF DOCUMENTS

THIS DOCUMENT, AND THE IDEAS AND DESIGNS INCORPORATED HEREIN, AS AN INSTRUMENT OF PROFESSIONAL SERVICE, IS THE PROPERTY OF CH2M HILL AND IS NOT TO BE USED, IN WHOLE OR IN PART, FOR ANY OTHER PROJECT WITHOUT THE WRITTEN AUTHORIZATION OF CH2M HILL.

©CH2M HILL

VERIFY SCALES

BAR IS ONE INCH ON ORIGINAL DRAWING.
0 — 1"
IF NOT ONE INCH ON THIS SHEET, ADJUST SCALES ACCORDINGLY.

MODIFICATIONS TO THE J. LAMBERT SCHWARTZ WWTP

THE GRAND STRAND WATER AND SEWER AUTHORITY

MECHANICAL LEGEND

DWG NO. G-3
DATE AUG 1985
PROJ NO. SA19793.A0

OVERLAY IDENTIFICATION | PROJ NO. | CONTRACT | COMPOSITE N/O | OVERLAY | SCREEN | FORMAT 22X34NC | FILM KE | PRINTED 1.0 | 8.4 | DESIGNED BY | DRAWN BY | CHECKED BY

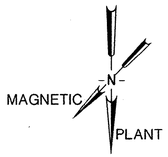

SCALE: 1" = 30'-0"

NOTES:

1. CUT EXIST 30" DIP AND CONNECT TO NEW 30" DIP PRIMARY INFLUENT WITH NEW 30" MJ TEE, INV EL 14.25 ±. (CONTRACTOR TO VERIFY ELEVATION)
2. REMOVE EXST 4" PVC DRAIN BETWEEN MANHOLE 'B' AND 'C' SEE (302) FOR ALL DRAIN CONNECTIONS @ MANHOLES 'B' AND 'C'
3. SEE IRRIGATION SYSTEM DETAIL (2) M-5 FOR PIPING MODIFICATIONS.
4. ◐ INDICATES BORING LOCATION. BORING LOGS INCLUDED IN THE SPECIFICATIONS.
5. REMOVE SIDEWALK TO NEAREST EXPANSION JOINT FOR CONDUIT AND 2" CHLORINE SOLUTION INSTALLATION. REPLACE SIDEWALK IN KIND AFTER INSTALLATION OF CONDUIT AND 2" CHLORINE SOLUTION.
6. ALL BURIED DIP TO BE RESTRAINED JOINT TYPE (OR FLANGED IF SHOWN ON SECTION DRAWING)
7. BENCH MARK ON SITE = 27.58 METAL POLE FOUNDATION

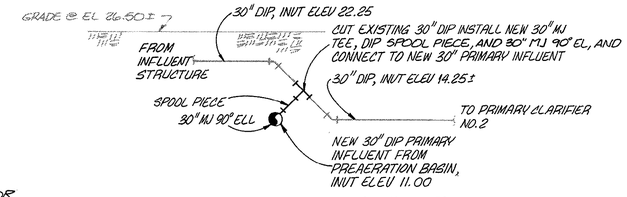

ELEVATION OF CONNECTION TO 30" PRIMARY INFLUENT DETAIL (1)

NTS

NOTE: FIELD VERIFY LOCATION.

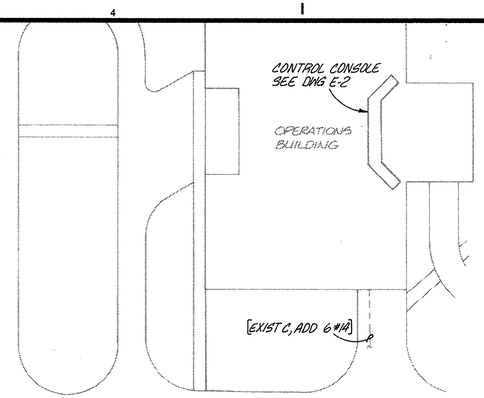

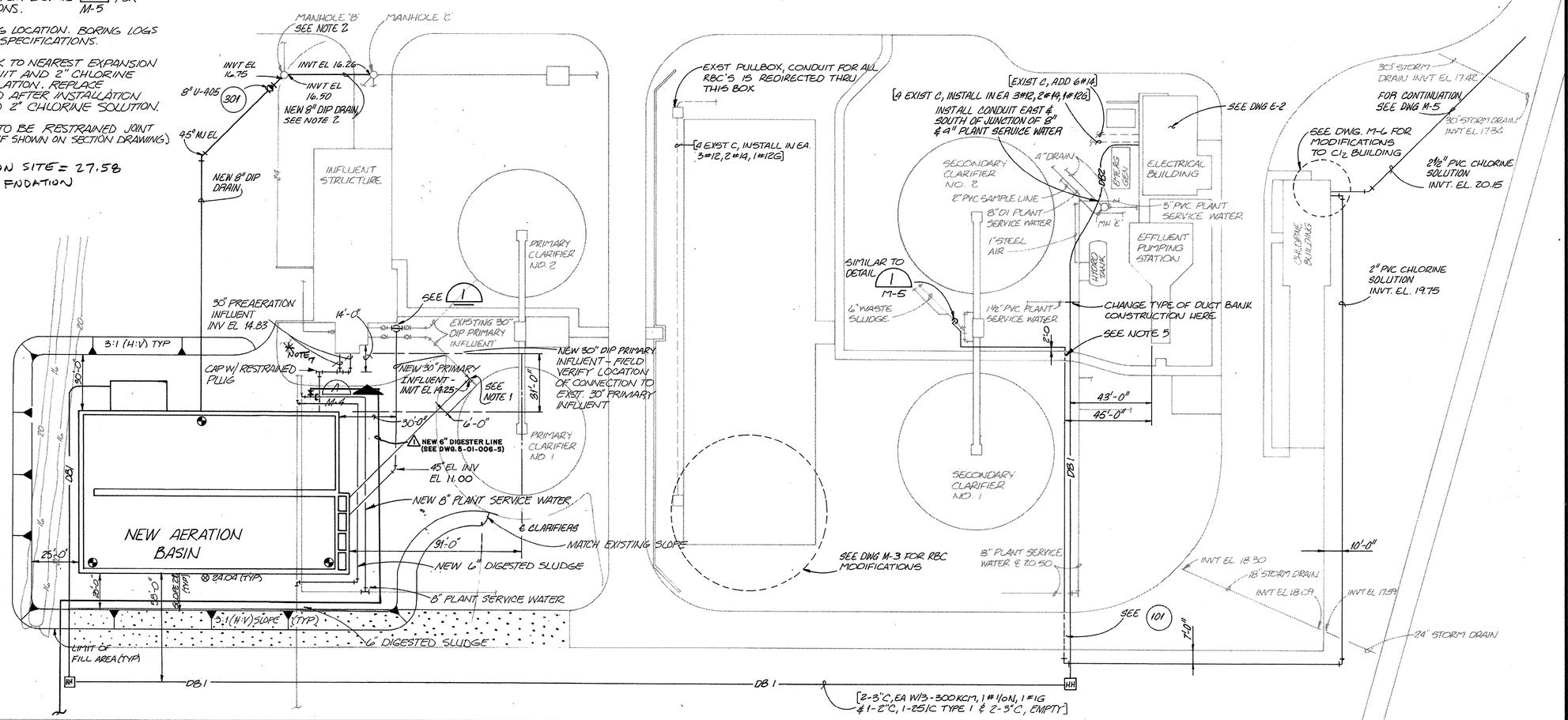

7-05-004-S

DSGN B. PUCCIA / R. JOHNSON					
DR R.A. GILHESON / H. DE MEL					
CHK BELSER / GOULDMAN	1	4-94	AS-BUILT 6" DIGESTER LINE	DRT	
APVD R.A. HIRSEKORN	NO.	DATE	REVISION	BY	APVD

CH2M HILL

REUSE OF DOCUMENTS
THIS DOCUMENT, AND THE IDEAS AND DESIGNS INCORPORATED HEREIN, AS AN INSTRUMENT OF PROFESSIONAL SERVICE, IS THE PROPERTY OF CH2M HILL AND IS NOT TO BE USED, IN WHOLE OR IN PART, FOR ANY OTHER PROJECT WITHOUT THE WRITTEN AUTHORIZATION OF CH2M HILL.
©CH2M HILL

VERIFY SCALES
BAR IS ONE INCH ON ORIGINAL DRAWING.
0 1"
IF NOT ONE INCH ON THIS SHEET, ADJUST SCALES ACCORDINGLY.

MODIFICATIONS TO THE J. LAMBERT SCHWARTZ WWTP

THE GRAND STRAND WATER AND SEWER AUTHORITY

SITE PLAN

DWG NO. C-1
DATE AUG 1995
PROJ NO. SA19793.A0

OVERLAY IDENTIFICATION: COMPOSITE, OVERLAY SCREEN
PROJ NO.
CONTRACT

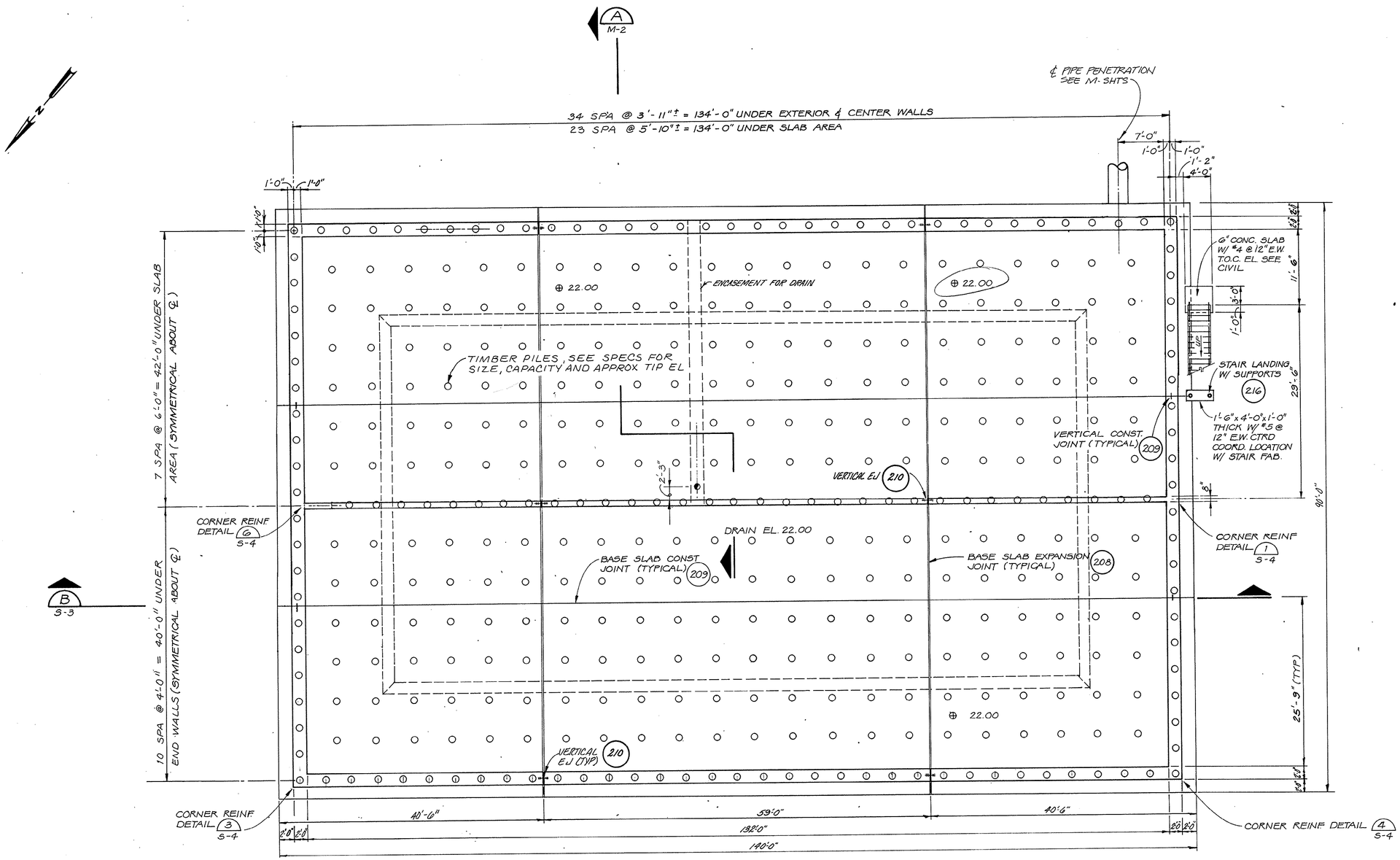

PRE-AERATION BASIN — PILE AND FOUNDATION PLAN

1/8" = 1'-0"

7-05-005-S

DSGN J.D. MAXFIELD					
DR M.G. FERNHAM / R.A. GILKESON					
CHK B. JOHNSON					
APVD R.A. HIRSEKORN	NO.	DATE	REVISION	BY	APVD

CH2M HILL

REUSE OF DOCUMENTS

THIS DOCUMENT, AND THE IDEAS AND DESIGNS INCORPORATED HEREIN, AS AN INSTRUMENT OF PROFESSIONAL SERVICE, IS THE PROPERTY OF CH2M HILL AND IS NOT TO BE USED, IN WHOLE OR IN PART, FOR ANY OTHER PROJECT WITHOUT THE WRITTEN AUTHORIZATION OF CH2M HILL.

©CH2M HILL

VERIFY SCALES

BAR IS ONE INCH ON ORIGINAL DRAWING: 0 1"

IF NOT ONE INCH ON THIS SHEET, ADJUST SCALES ACCORDINGLY.

MODIFICATIONS TO THE J. LAMBERT SCHWARTZ WWTP

THE GRAND STRAND WATER AND SEWER AUTHORITY

PRE-AERATION BASIN FOUNDATION PLAN

SHEET DWG NO. S-1

DATE AUG 1985

PROJ NO. SA19793.A0

SOUTH CAROLINA PROFESSIONAL ENGINEER RICHARD A. HIRSEKORN REGISTERED

OVERLAY IDENTIFICATION | COMPOSITE | OVERLAY | SCREEN | PROJ NO. | CONTRACT

DESIGNED BY 1 J.D. MAXFIELD 2 3 4 5

DRAWN BY 1 M.G. FERNHAM 2 F.N. DAVID 3 4 5

VERIFIED BY 1 B. JOHNSON 2 3 4 5

PRINTED 8.4 10

FILM KE

FORMAT 223AMC

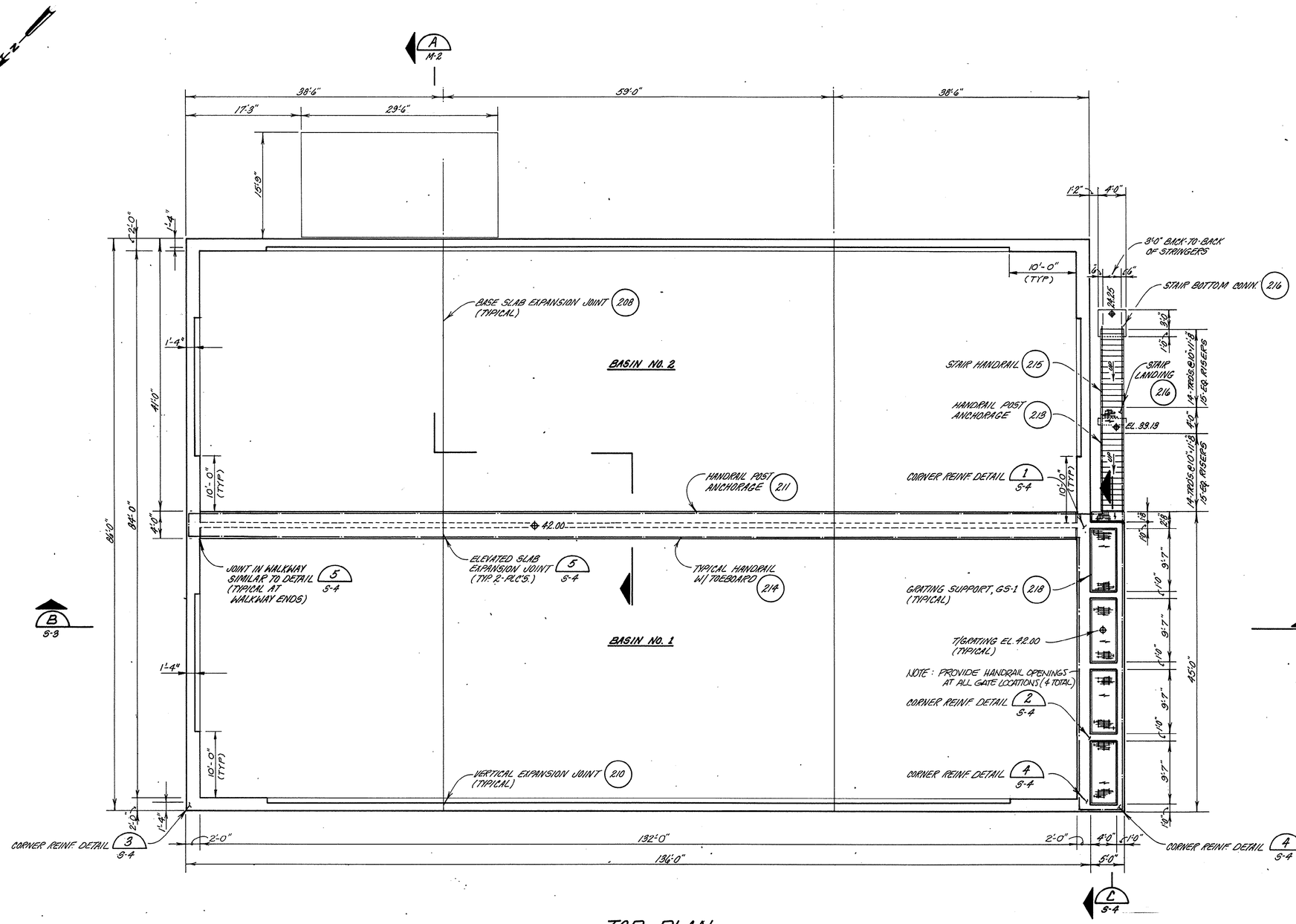

TOP PLAN

1/8"=1'-0"

7-05-006-S

DESIGNED BY J.B. WORCESTER	DRAWN BY B.A. BOZMAN	CHECKED BY			

CH2M HILL

DSGN J.B. WORCESTER					
DR B.A. BOZMAN					
CHK B. JOHNSON, L.D. MAXFIELD					
APVD R.A. HIRSEKORN	NO.	DATE	REVISION	BY	APVD

REUSE OF DOCUMENTS

THIS DOCUMENT, AND THE IDEAS AND DESIGNS INCORPORATED HEREIN, AS AN INSTRUMENT OF PROFESSIONAL SERVICE, IS THE PROPERTY OF CH2M HILL AND IS NOT TO BE USED, IN WHOLE OR IN PART, FOR ANY OTHER PROJECT WITHOUT THE WRITTEN AUTHORIZATION OF CH2M HILL.

©CH2M HILL

VERIFY SCALES

BAR IS ONE INCH ON ORIGINAL DRAWING.
0 1"
IF NOT ONE INCH ON THIS SHEET, ADJUST SCALES ACCORDINGLY.

MODIFICATIONS TO THE J. LAMBERT SCHWARTZ WWTP

THE GRAND STRAND WATER AND SEWER AUTHORITY

PRE-AERATION BASIN TOP PLAN

SHEET	
DWG NO.	S-2
DATE	AUG 1985
PROJ NO.	SA19793.A0

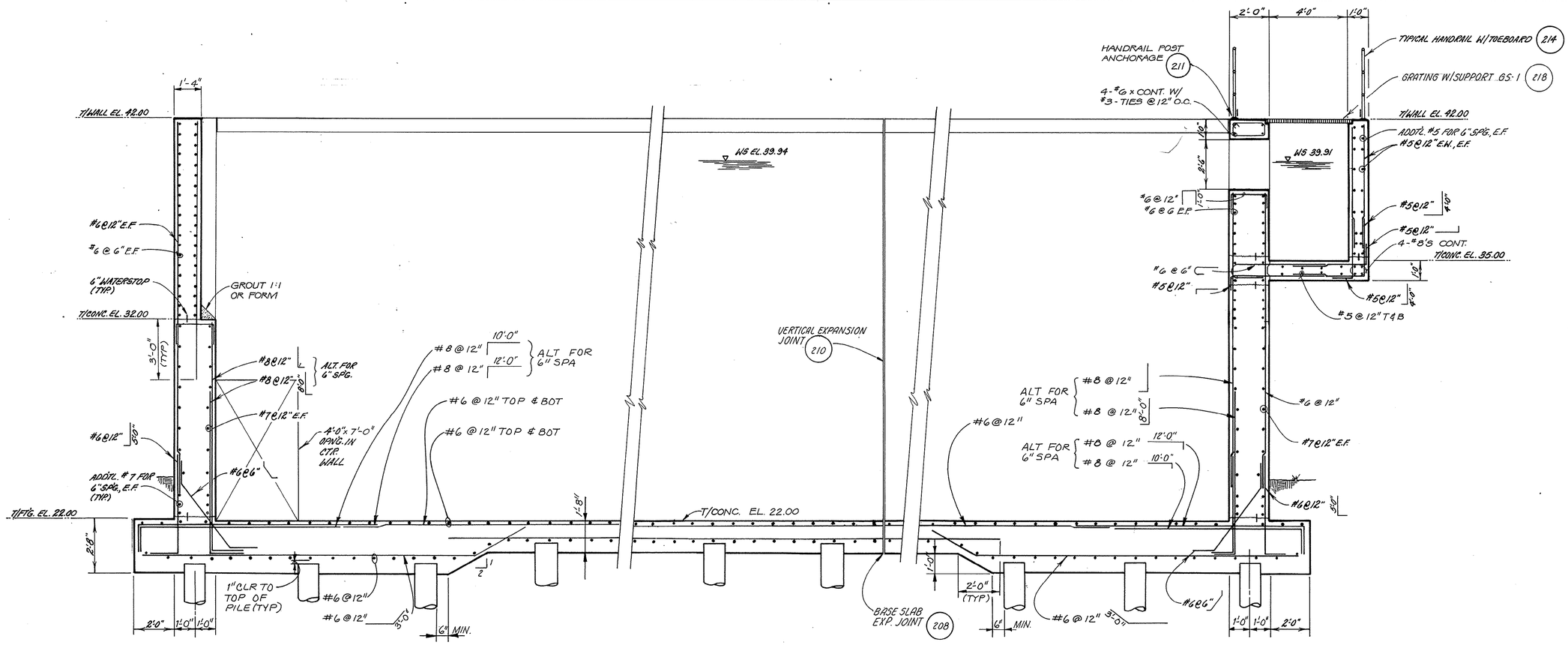

SECTION B

3/8" = 1'-0" M-1

7-05-007-S

DSGN V. BATES/J. MAXFIELD DR R.A. GILKESON CHK T.L. BELSER APVD R.A. HIRSEKORN	NO.	DATE	REVISION	BY	APVD	

CH2M HILL

REUSE OF DOCUMENTS
THIS DOCUMENT, AND THE IDEAS AND DESIGNS INCORPORATED HEREIN, AS AN INSTRUMENT OF PROFESSIONAL SERVICE, IS THE PROPERTY OF CH2M HILL AND IS NOT TO BE USED, IN WHOLE OR IN PART, FOR ANY OTHER PROJECT WITHOUT THE WRITTEN AUTHORIZATION OF CH2M HILL.
©CH2M HILL

VERIFY SCALES
BAR IS ONE INCH ON ORIGINAL DRAWING.
0 1"
IF NOT ONE INCH ON THIS SHEET, ADJUST SCALES ACCORDINGLY.

MODIFICATIONS TO THE J. LAMBERT SCHWARTZ WWTP
THE GRAND STRAND WATER AND SEWER AUTHORITY

PRE-AERATION BASIN SECTIONS AND DETAILS

DWG NO. S-3
DATE AUG 1985
PROJ NO. SA19793.A0

OVERLAY IDENTIFICATION: COMPOSITE / OVERLAY / SCREEN
PROJ NO. / CONTRACT

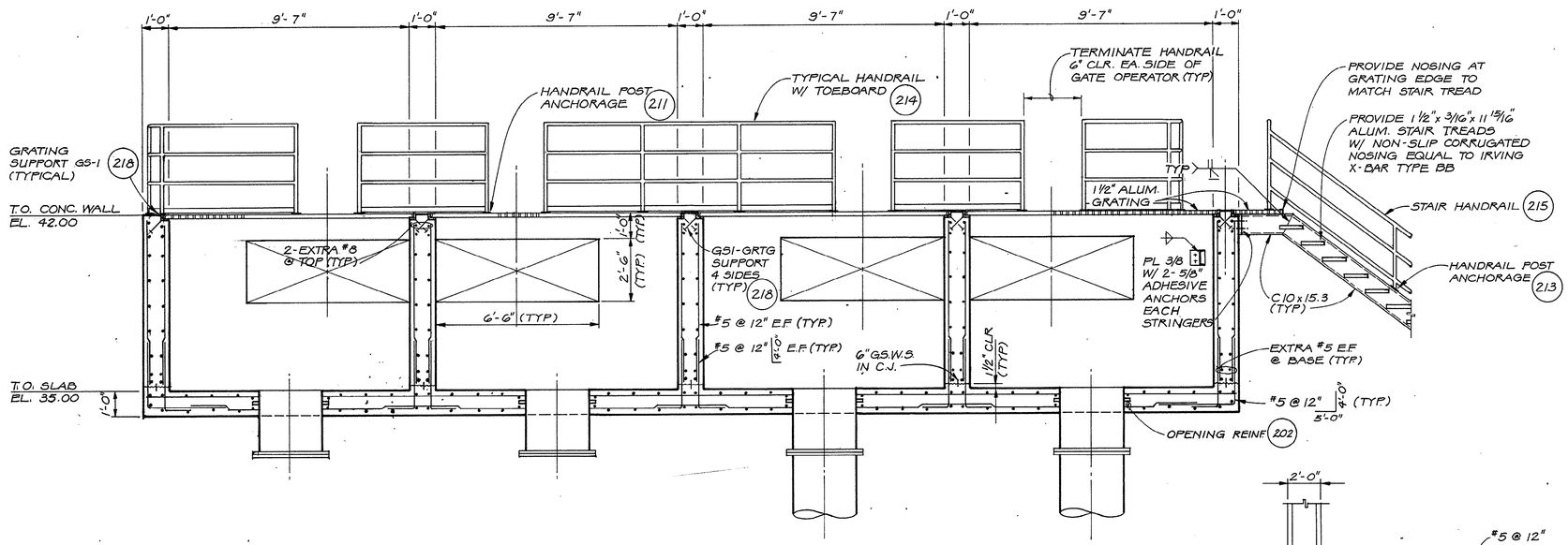

SECTION C
3/8" = 1'-0"
S-2

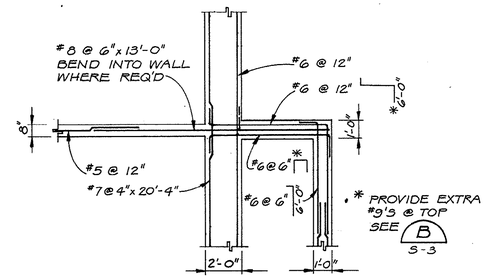

CORNER REINF. DETAIL 1
NTS
S-2

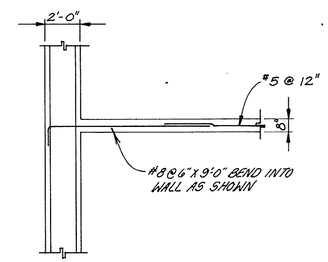

CORNER REINF. DETAIL 6
NTS
S-2

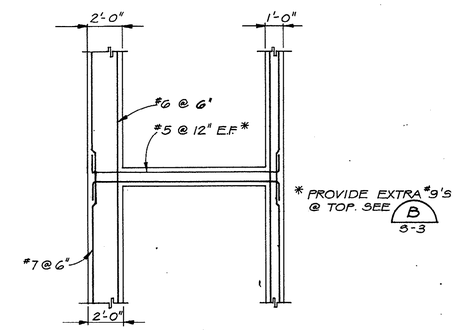

CORNER REINF. DETAIL 2
NTS (TYPICAL 3 PLACES)
S-2

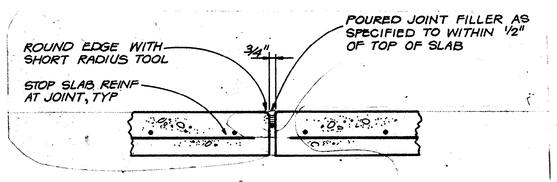

ELEVATED SLAB EXPANSION JOINT 5
NTS
S-2

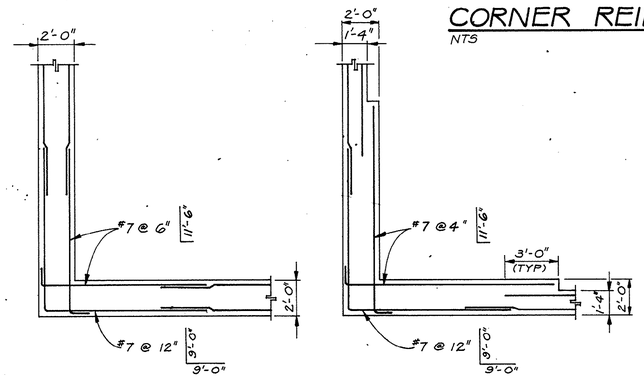

ELEV. 22.0 TO 32.0

ELEV. 32.0 TO 42.0

CORNER REINF. DETAIL 3
NTS
S-2

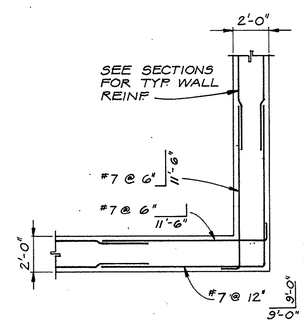

ELEV. 22.0 TO 32.0

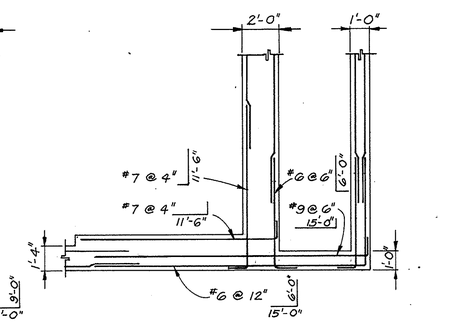

ELEV. 35.0 TO 42.0 (AS SHOWN)
ELEV. 32.0 TO 35.0 SIM. TO 4

CORNER REINF. DETAIL 4
NTS
S-2

7-05-008-S

SOUTH CAROLINA PROFESSIONAL ENGINEER RICHARD A. HIRSEKORN

CH2M HILL

DSGN J.B. WORCESTER					
DR V.N. DAVID					
CHK J.D. MAXFIELD B. JOHNSON					
APVD R.A. HIRSEKORN	NO.	DATE	REVISION	BY	APVD

REUSE OF DOCUMENTS
THIS DOCUMENT, AND THE IDEAS AND DESIGNS INCORPORATED HEREIN, AS AN INSTRUMENT OF PROFESSIONAL SERVICE, IS THE PROPERTY OF CH2M HILL AND IS NOT TO BE USED, IN WHOLE OR IN PART, FOR ANY OTHER PROJECT WITHOUT THE WRITTEN AUTHORIZATION OF CH2M HILL.
©CH2M HILL

VERIFY SCALES
BAR IS ONE INCH ON ORIGINAL DRAWING.
0 1"
IF NOT ONE INCH ON THIS SHEET, ADJUST SCALES ACCORDINGLY.

MODIFICATIONS TO THE J. LAMBERT SCHWARTZ WWTP
THE GRAND STRAND WATER AND SEWER AUTHORITY

PRE-AERATION BASIN SECTIONS AND DETAILS

SHEET
DWG NO. S-4
DATE AUG 1985
PROJ NO. SA19793.A0

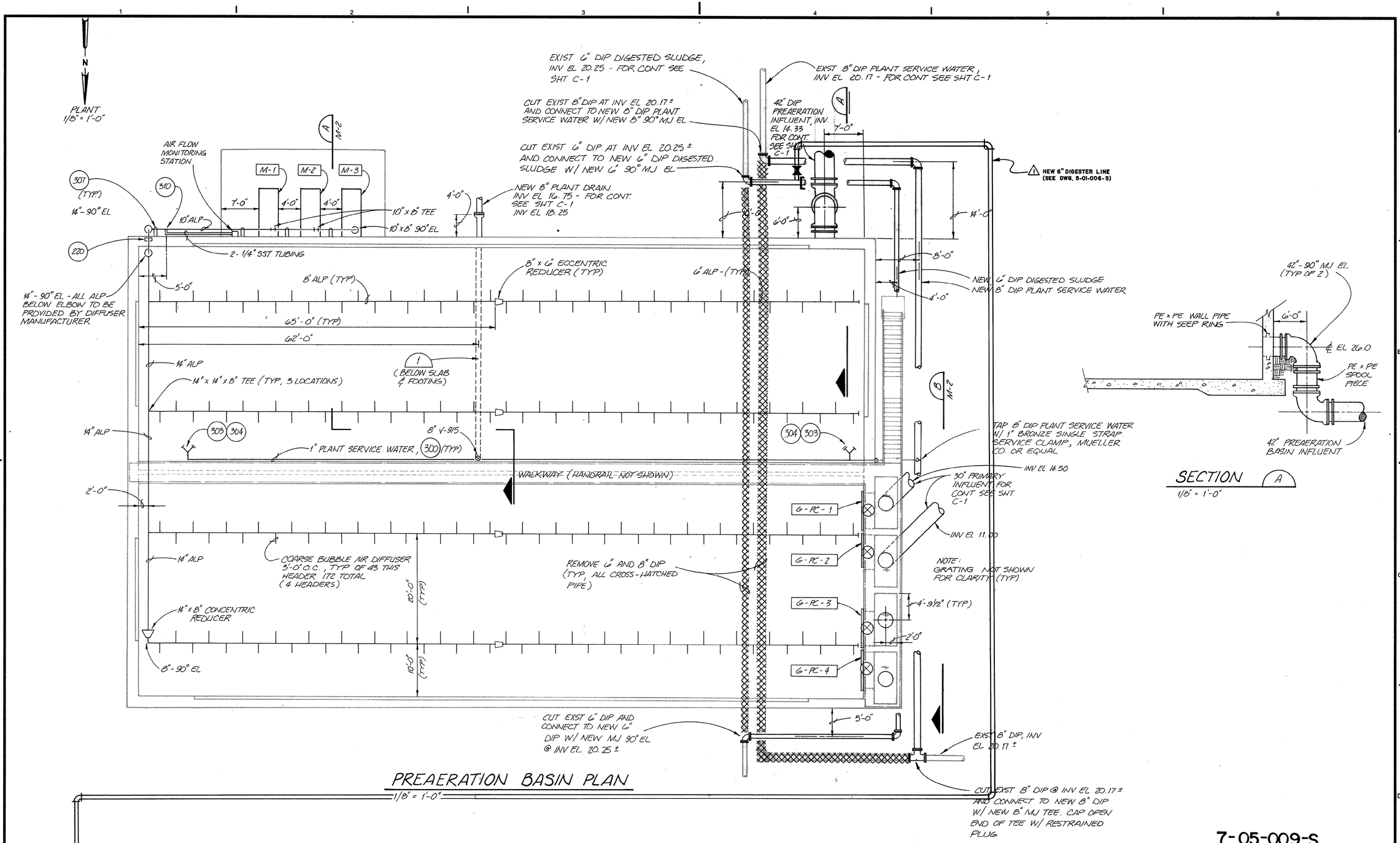

7-05-009-S

CH2M HILL	DSGN R. PUCCIA				
	DR R. JACKSON				
	CHK J.C. GOLDMAN				
	APVD R.A. HIRSEKORN	1	4-94	AS-BUILT 6" DIGESTER LINE	DRT
		NO.	DATE	REVISION	BY / APVD

REUSE OF DOCUMENTS
THIS DOCUMENT, AND THE IDEAS AND DESIGNS INCORPORATED HEREIN, AS AN INSTRUMENT OF PROFESSIONAL SERVICE, IS THE PROPERTY OF CH2M HILL AND IS NOT TO BE USED, IN WHOLE OR IN PART, FOR ANY OTHER PROJECT WITHOUT THE WRITTEN AUTHORIZATION OF CH2M HILL.
©CH2M HILL

VERIFY SCALES
BAR IS ONE INCH ON ORIGINAL DRAWING.
0 1"
IF NOT ONE INCH ON THIS SHEET, ADJUST SCALES ACCORDINGLY.

MODIFICATIONS TO THE J. LAMBERT SCHWARTZ WWTP
THE GRAND STRAND WATER AND SEWER AUTHORITY

PREAERATION BASIN PLAN

SHEET
DWG NO. M-1
DATE AUG 1985
PROJ NO. SA19793.AO

OVERLAY IDENTIFICATION	COMPOSITE	OVERLAY	OVERLAY SCREEN
PROJ NO.	M-1	M-1.1	M-1.2
CONTRACT	M-1	M-1.1	M-1.2

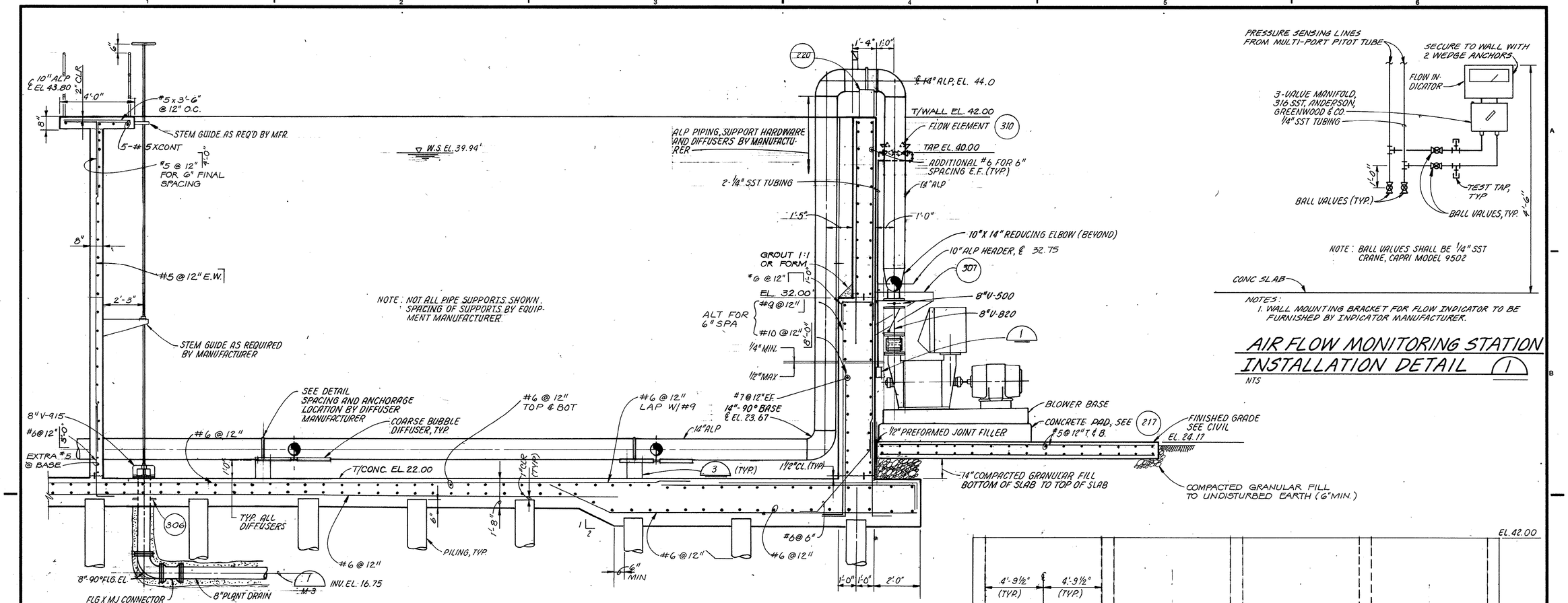

SECTION A
3/8" = 1'-0" M-1

NOTE: BALL VALVES SHALL BE 1/4" SST CRANE, CAPRI MODEL 9502

NOTES:
1. WALL MOUNTING BRACKET FOR FLOW INDICATOR TO BE FURNISHED BY INDICATOR MANUFACTURER.

AIR FLOW MONITORING STATION INSTALLATION DETAIL (1)
NTS

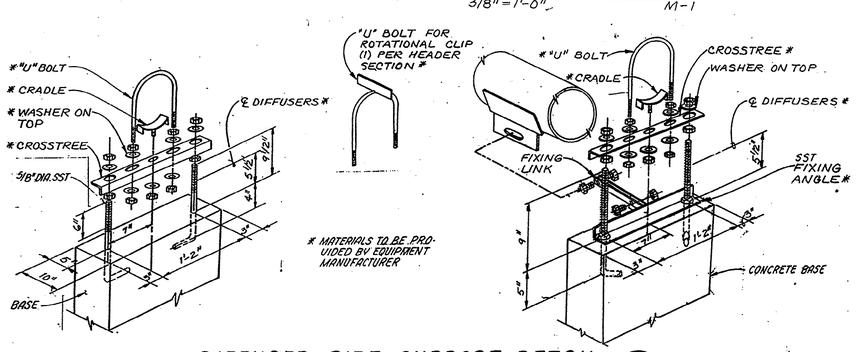

* MATERIALS TO BE PROVIDED BY EQUIPMENT MANUFACTURER

DIFFUSER PIPE SUPPORT DETAIL (3)
NTS

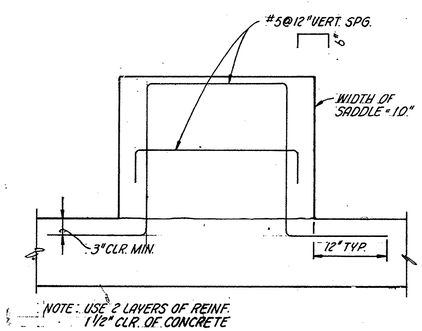

NOTE: USE 2 LAYERS OF REINF. 1 1/2" CLR. OF CONCRETE

CONCRETE BASE
NTS

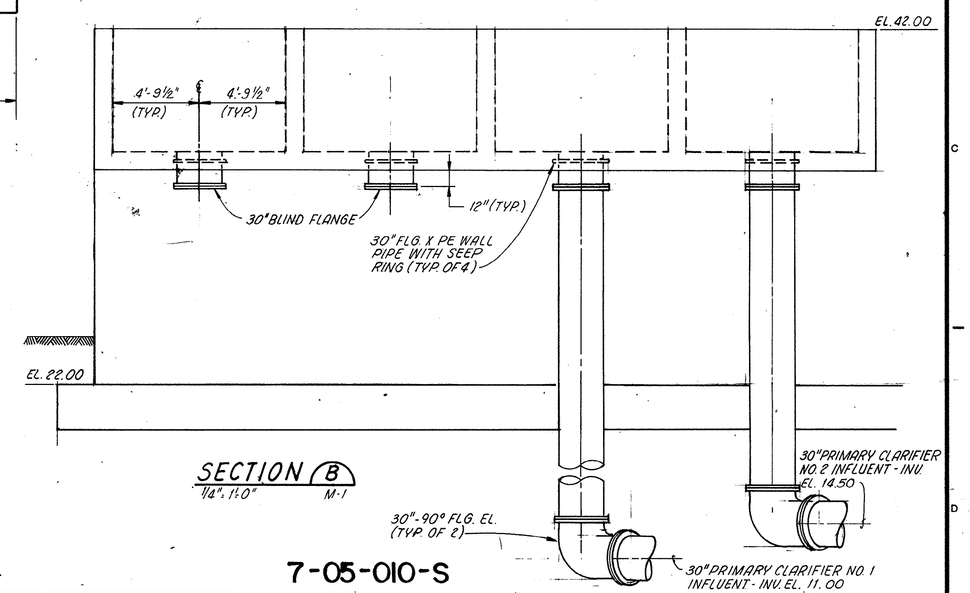

SECTION B
1/4" = 1'-0" M-1

7-05-010-S

SOUTH CAROLINA PROFESSIONAL ENGINEER RICHARD A. IRSEKORN REGISTERED

CH2M HILL

DSGN	D.PUCCIO/J. WORCESTER
DR	BOZMAN/JACKSON
CHK	GOLDMAN/MAXFIELD
APVD	R.A. HIRSEKORN

NO.	DATE	REVISION	BY	APVD

REUSE OF DOCUMENTS
THIS DOCUMENT, AND THE IDEAS AND DESIGNS INCORPORATED HEREIN, AS AN INSTRUMENT OF PROFESSIONAL SERVICE, IS THE PROPERTY OF CH2M HILL AND IS NOT TO BE USED, IN WHOLE OR IN PART, FOR ANY OTHER PROJECT WITHOUT THE WRITTEN AUTHORIZATION OF CH2M HILL.
©CH2M HILL

VERIFY SCALES
BAR IS ONE INCH ON ORIGINAL DRAWING.
0 1"
IF NOT ONE INCH ON THIS SHEET, ADJUST SCALES ACCORDINGLY.

MODIFICATIONS TO THE J. LAMBERT SCHWARTZ WWTP

THE GRAND STRAND WATER AND SEWER AUTHORITY

PRE-AERATION BASIN SECTIONS AND DETAILS

DWG NO. M-2
DATE AUG 1985
PROJ NO. SA19793.A0

OVERLAY IDENTIFICATION | COMPOSITE | OVERLAY | SCREEN
PROJ NO. | M-2.1 | M-2.2 | M-2.3
CONTRACT | | | |

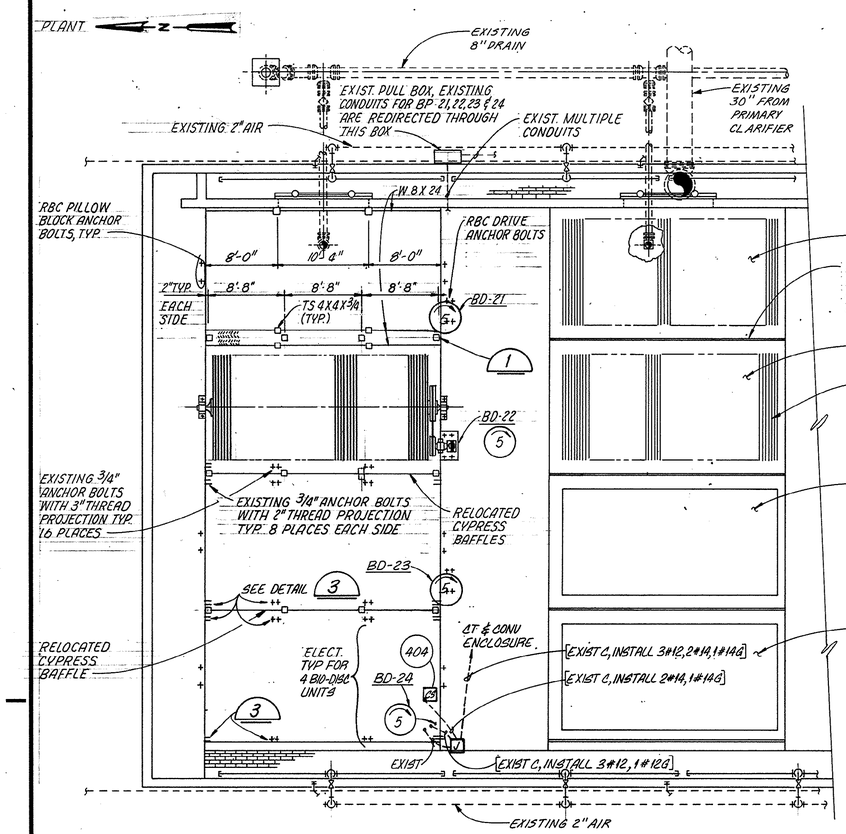

NOTES:

1. CONTRACTOR SHALL CHECK USABILITY OF EXISTING CONDUITS. IF CONDUIT IS NOT USABLE, INSTALL NEW CONDUIT EXPOSED ON HANDRAILS.
2. FIELD LOCATE NEW RBC'S AT EXISTING ANCHOR BOLTS
3. BIO DISC COVERS NOT SHOWN.

ROTATING BIOLOGICAL CONTACTOR PARTIAL PLAN

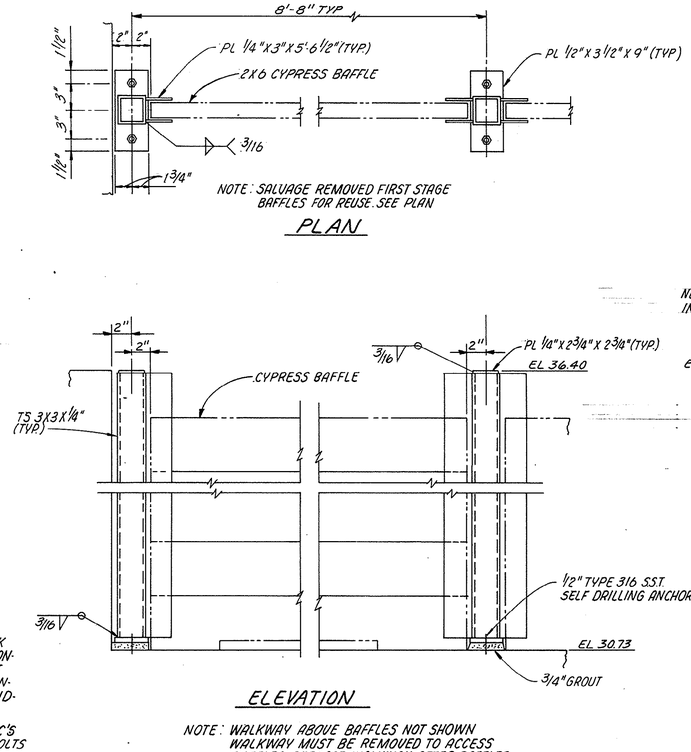

NOTE: SALVAGE REMOVED FIRST STAGE BAFFLES FOR REUSE. SEE PLAN

PLAN

ELEVATION

NOTE: WALKWAY ABOVE BAFFLES NOT SHOWN WALKWAY MUST BE REMOVED TO ACCESS BAFFLES. REPLACE WALKWAY AFTER BAFFLES ARE REMOVED.

BAFFLE INSTALLATION/REMOVAL DETAIL (1)

1/2" = 1'-0"

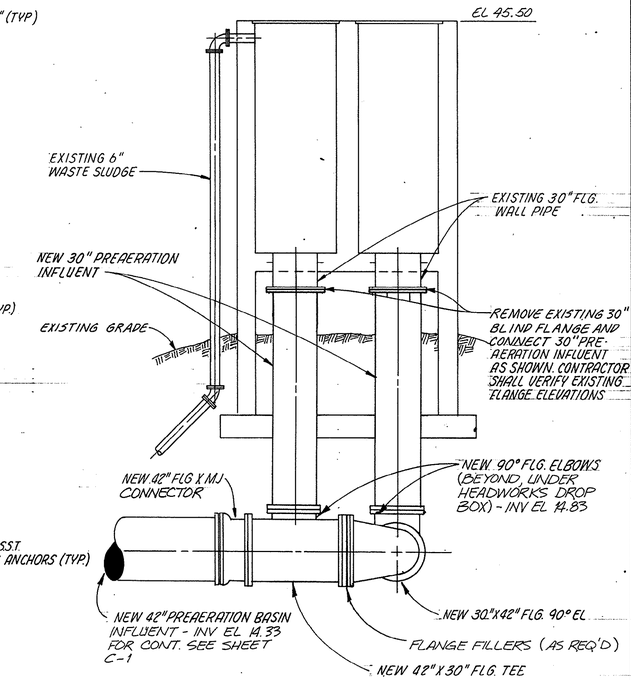

HEADWORKS CONNECTION (A)

1/4" = 1'-0" C-1

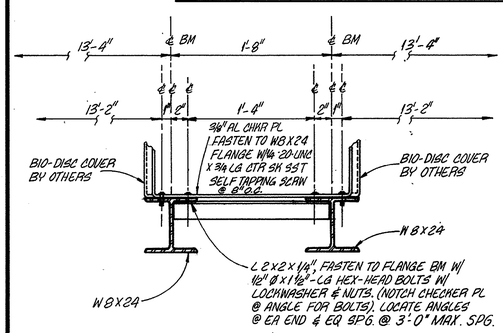

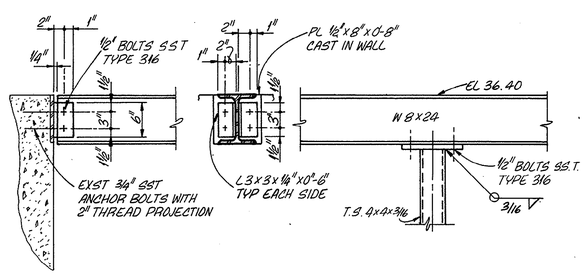

RBC COVER SUPPORT DETAILS (3)

N.T.S.

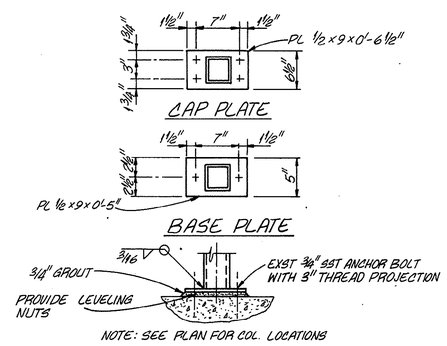

NOTE: SEE PLAN FOR COL. LOCATIONS

* NOTE: DO NOT TIE ENCASEMENT TO FLOOR SLAB ABOVE UNLESS SPECIFICALLY SHOWN ON DRAWING

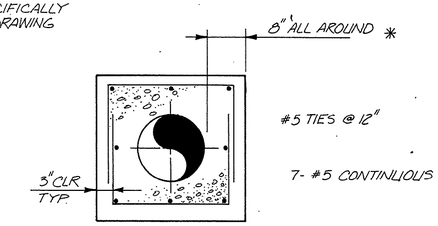

PIPE ENCASEMENT (1)

NTS M-1, M-2

7-05-011-S

SOUTH CAROLINA REGISTERED PROFESSIONAL ENGINEER RICHARD A. LIBSEKORN

CH2M HILL

DSGN U. BATES/R. JOHNSON					
DR K.A. GILKESON/H. DE NEL					
CHK T.L. BELSER					
APVD R.A. LIBSEKORN	NO.	DATE	REVISION	BY	APVD

REUSE OF DOCUMENTS

THIS DOCUMENT, AND THE IDEAS AND DESIGNS INCORPORATED HEREIN, AS AN INSTRUMENT OF PROFESSIONAL SERVICE, IS THE PROPERTY OF CH2M HILL AND IS NOT TO BE USED, IN WHOLE OR IN PART, FOR ANY OTHER PROJECT WITHOUT THE WRITTEN AUTHORIZATION OF CH2M HILL.

©CH2M HILL

VERIFY SCALES
BAR IS ONE INCH ON ORIGINAL DRAWING.
0 1"
IF NOT ONE INCH ON THIS SHEET, ADJUST SCALES ACCORDINGLY.

MODIFICATIONS TO THE J. LAMBERT SCHWARTZ WWTP

THE GRAND STRAND WATER AND SEWER AUTHORITY

ROTATING BIOLOGICAL CONTACTOR/ HEADWORKS MODIFICATIONS

DWG NO. M-3
DATE AUG 1985
PROJ NO. SA19793.A0

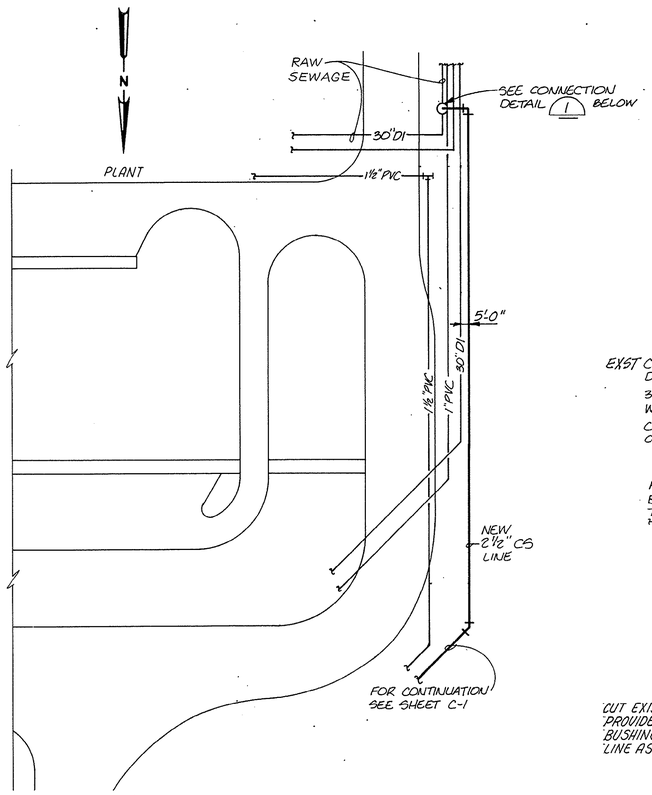

PARTIAL SITE PLAN

1" = 30'

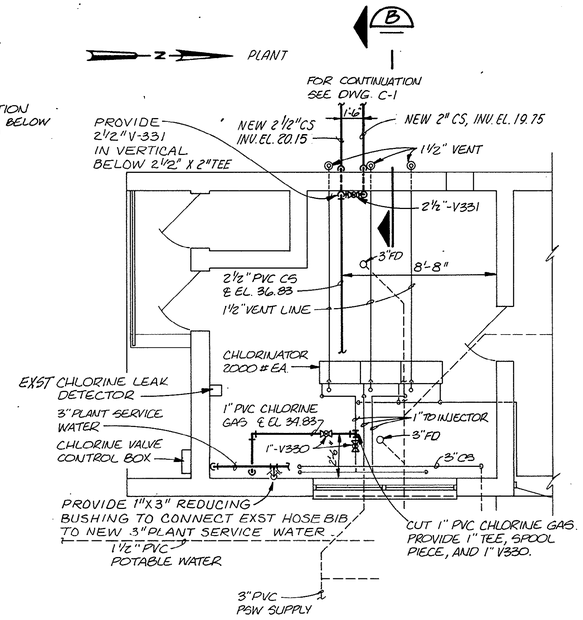

CHLORINATION BUILDING PARTIAL PLAN

1/4" = 1'-0"

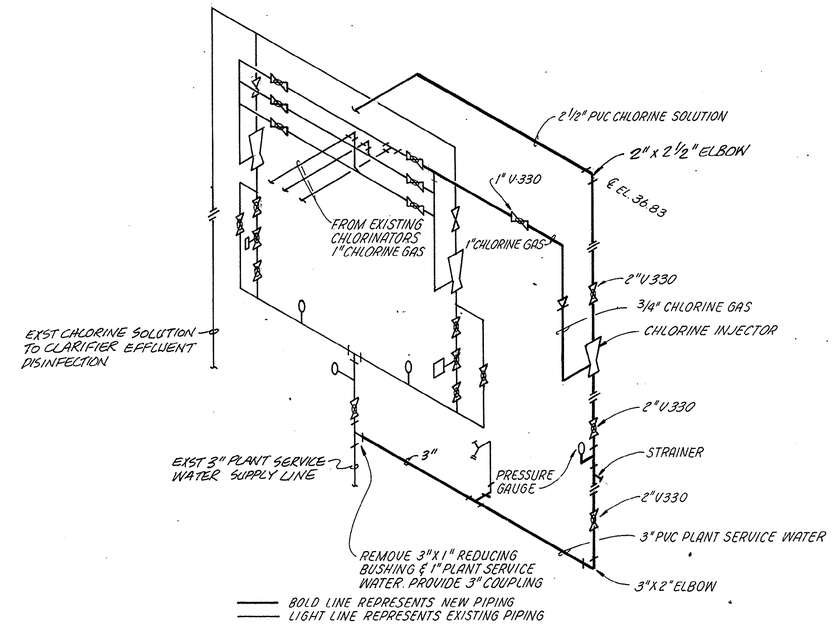

BOLD LINE REPRESENTS NEW PIPING
LIGHT LINE REPRESENTS EXISTING PIPING

CHLORINATION BUILDING PIPING SCHEMATIC

NOTE: SEE 309 FOR PIPE SUPPORTS

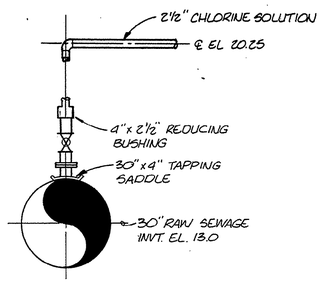

DETAIL 1

NTS

NOTES: 1. PROVIDE TAPPING SADDLE AND 4" BALL VALVE. DRILL PIPE FOR 2½" DIA. ORIFICE THROUGH BALL VALVE.
2. BALL VALVE NOT REQUIRED FOR CONNECTION TO WASTE SLUDGE LINE.

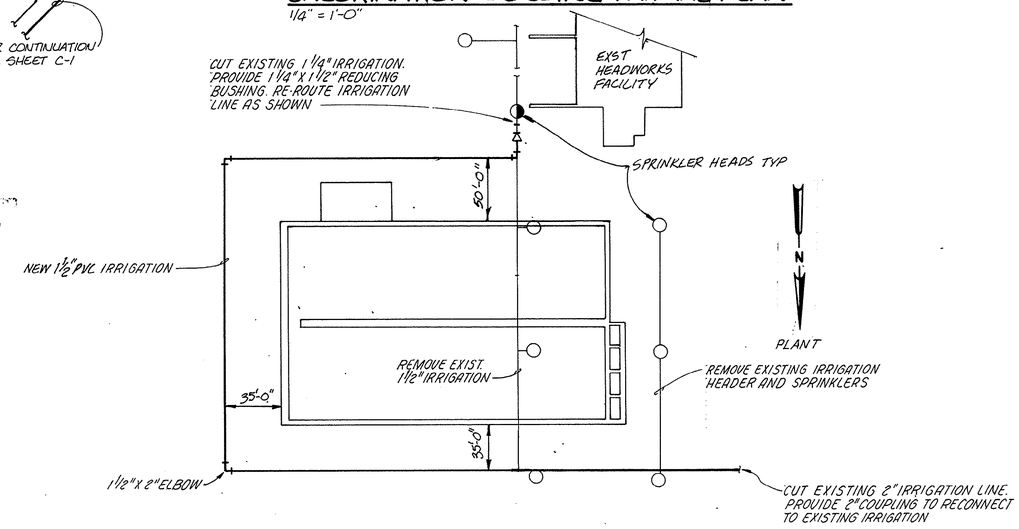

IRRIGATION SYSTEM DETAIL 2

NTS C-1

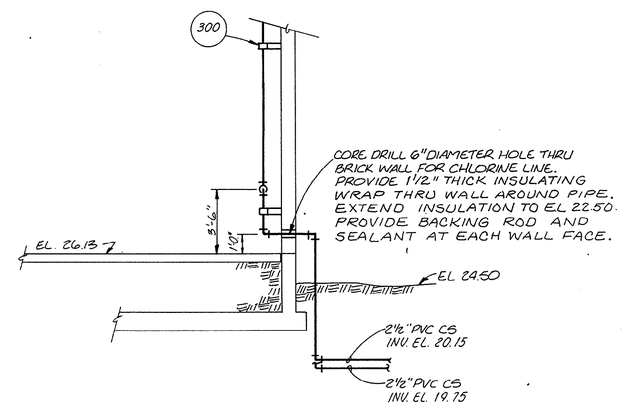

SECTION B

1/4" = 1'-0"

7-05-012-S

SOUTH CAROLINA REGISTERED PROFESSIONAL ENGINEER RICHARD A. HIRSEKORN

CH2M HILL

DSGN V. BATES					
DR M. HALES					
CHK T.L. BELSER					
APVD R.A. HIRSEKORN	NO.	DATE	REVISION	BY	APVD

REUSE OF DOCUMENTS
THIS DOCUMENT, AND THE IDEAS AND DESIGNS INCORPORATED HEREIN, AS AN INSTRUMENT OF PROFESSIONAL SERVICE, IS THE PROPERTY OF CH2M HILL AND IS NOT TO BE USED, IN WHOLE OR IN PART, FOR ANY OTHER PROJECT WITHOUT THE WRITTEN AUTHORIZATION OF CH2M HILL.
©CH2M HILL

VERIFY SCALES
BAR IS ONE INCH ON ORIGINAL DRAWING.
0 1"
IF NOT ONE INCH ON THIS SHEET, ADJUST SCALES ACCORDINGLY.

MODIFICATIONS TO THE J. LAMBERT SCHWARTZ WWTP
THE GRAND STRAND WATER AND SEWER AUTHORITY

CHLORINATION BUILDING MODIFICATIONS

DWG NO. M-4
DATE AUG 1985
PROJ NO. SA19793.A0

OVERLAY IDENTIFICATION: COMPOSITE / OVERLAY / SCREEN
PROJ NO. / CONTRACT
FORMAT A/C
PRINTED 10 84
FILM KE

ELECTRICAL LEGEND

- CONNECTION POINT TO EQUIPMENT SPECIFIED. FURNISHED AND INSTALLED UNDER OTHER SECTIONS. RACEWAY, CONDUCTOR AND CONNECTION IN THIS SECTION
- [X,Y] CONDUIT OF SIZE X CONTAINING CONDUCTORS Y
- MCC-A MAJOR ELECTRICAL COMPONENT OR DEVICE - NAME OR IDENTIFYING SYMBOL AS SHOWN.
- 5 MOTOR, SQUIRREL CAGE INDUCTION - HORSEPOWER INDICATED
- 2 LUMINAIRE - SEE SCHEDULE
- 3 LUMINAIRE AND POLE - SEE SCHEDULE
- 4 WALL MOUNTED LUMINAIRE - SEE SCHEDULE
- J GENERAL ELECTRICAL CONTROL OR WIRING DEVICE. NEMA 1 ENCLOSURE UNLESS INDICATED OTHERWISE. LETTER SYMBOLS OR ABBREVIATIONS INDICATE TYPE OF DEVICE.
- DRAWOUT AIR CIRCUIT BREAKER LOW VOLTAGE
- FUSE
- GROUND
- 120/240 OR 277/480 — 150 KVA — TRANSFORMER, SECONDARY VOLTAGES, PHASE AND RATING INDICATED AS APPLICABLE
- GFR — GROUND FAULT RELAY WITH C.T.
- PUSH-BUTTON SWITCH, MOMENTARY CONTACT, NORMALLY CLOSED
- TDR T.C. — TIME DELAY RELAY CONTACT NORMALLY OPEN CONTACT
- TDR T.O. — TIME DELAY RELAY CONTACT NORMALLY CLOSED
  - T.C. TIME CLOSE
  - T.O. TIME OPEN
  - INST. INSTANTANEOUS

  (TIME ACTION INDICATED)
- LA-2 HOME RUN - DESTINATION SHOWN
- OR EXPOSED CONDUIT AND CONDUCTORS*
- OR CONCEALED CONDUIT AND CONDUCTORS*

NOTE: RUNS MARKED WITH CROSSHATCHES INDICATE NUMBER OF NO.12 WIRES. LONG CROSSHATCH INDICATES GREEN GROUND WIRE. SIZE CONDUIT ACCORDING TO SPECIFICATIONS AND APPLICABLE CODE.

- CONDUIT, DOWN
- S WALL SWITCH: 2 - DOUBLE POLE; WP - WEATHERPROOF
- CONVENIENCE RECEPTACLE - DUPLEX UNLESS SPECIFIED OTHERWISE; WP - WEATHERPROOF
- CONTACT - NORMALLY OPEN
- CONTACT - NORMALLY CLOSED
- OVERLOAD RELAY HEATER
- MAGNETIC STARTER WITH NEMA SIZE INDICATED
- 100/M CIRCUIT BREAKER, MAGNETIC TRIP ONLY. FRAME SIZE SHOWN, 3 POLE UNLESS INDICATED OTHERWISE.
- 400 CIRCUIT BREAKER, 3 POLE UNLESS INDICATED OTHERWISE.
- 400 400 CIRCUIT BREAKER WITH CURRENT LIMITING FUSES. TRIP AND FUSE RATING INDICATED, 3 POLE UNLESS INDICATED OTHERWISE.
- REMOTE DEVICE
- CURRENT TRANSFORMER
- A INDICATING LIGHT - LETTER INDICATES COLOR
  - A - AMBER, G - GREEN
  - B - BLUE, R - RED
  - C - CLEAR, W - WHITE
- J OR GENERAL ELECTRICAL CONTROL OR WIRING DEVICE. LETTER SYMBOLS OR ABBREVIATIONS INDICATE TYPE OF DEVICE.
- DB 1 — DB1 CONSTRUCTION
- DB 2 — DB2 CONSTRUCTION

SEE DUCT BANK DETAILS ON THIS SHEET FOR CONSTRUCTION TYPES

ABBREVIATIONS

86	LOCKOUT RELAY	INCAND	INCANDESCENT
A	AMMETER	J,JB	JUNCTION BOX
AF	AMPS FRAME	KCM	THOUSAND CIRCULAR MILLS
AOL	AUXILIARY OVERLOAD	LC	LATCHING COIL
AT	AMPS TRIP	LR	LATCHING RELAY
ATNR	AUTO-TRANSFORMER NON-REVERSING	M	MAGNETIC CONTACTOR COIL
C	CONDUIT	MA	MILLIAMP
CB	CIRCUIT BREAKER	MCC	MOTOR CONTROL CENTER
CPT	CONTROL POWER TRANSFORMER	MR	METER RELAY
CR	CONTROL RELAY	MTD	MOTOR THERMAL DETECTOR
CT	CURRENT TRANSFORMER	N,NEUT	NEUTRAL
E	ELECTRICAL OPERATION	NC	NORMALLY CLOSED
EA	EACH	NO	NORMALLY OPEN
EI	ELECTRICAL INTERLOCK	OL	OVERLOAD RELAY
ETM	ELAPSED TIME METER	S	SECOND
EXST	EXISTING	SH	SPACE HEATER
F, FU	FUSE	SW	SWITCH
FVNR	FULL VOLTAGE NON-REVERSING	SWGR	SWITCHGEAR
G,GND	GROUND	TC	TRIP COIL
GALV	GALVANIZED	TDC	TIME DELAYED CLOSING
GFR	GROUND FAULT RELAY	TDR	TIME DELAY RELAY
HH	HANDHOLE	TJB	TERMINAL JUNCTION BOX
HID	HIGH INTENSITY DISCHARGE	UC	UNLATCHING COIL
HPS	HIGH PRESSURE SODIUM	VIB	VIBRATION DETECTOR
		W/	WITH
		WP	WEATHERPROOF

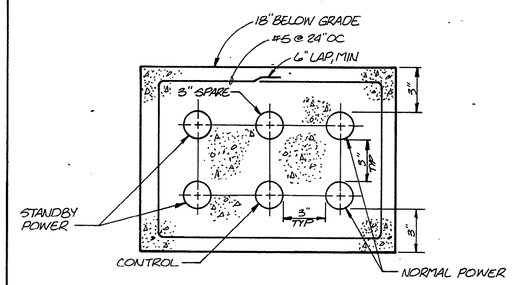

TYPE DB 1 DETAIL

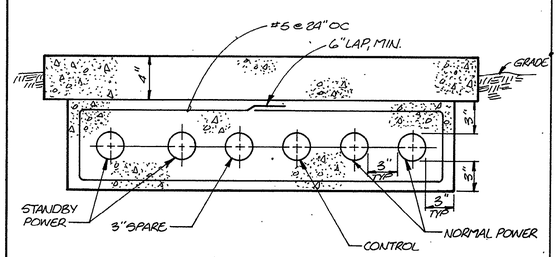

TYPE DB 2 DETAIL

NOTE: PROVIDE 6" MINIMUM GRANULAR FILL, 3/4" MINUS, UNDER ALL CONCRETE ENCASED DUCT RUNS.

DUCT BANK DETAILS

NTS

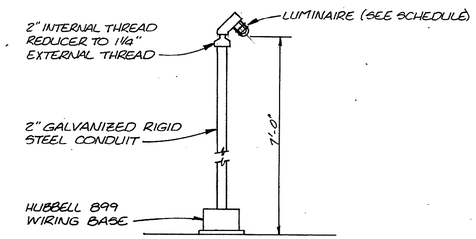

STANCHION MOUNTED LUMINAIRE (401)

NTS

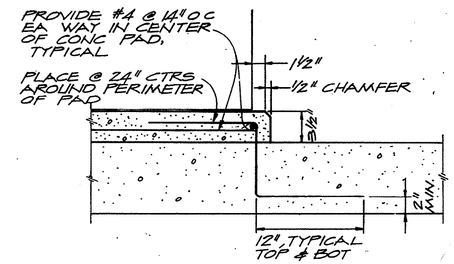

CONCRETE PAD SECTION (402)

NTS

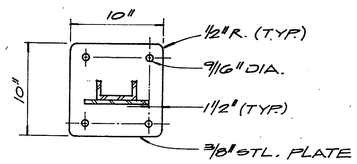

PLAN

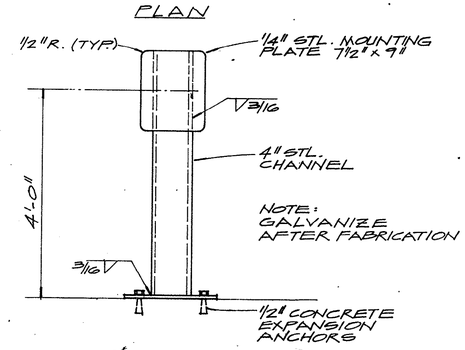

ELEVATION

EQUIPMENT MOUNTING PEDESTAL DETAIL (403)

NTS

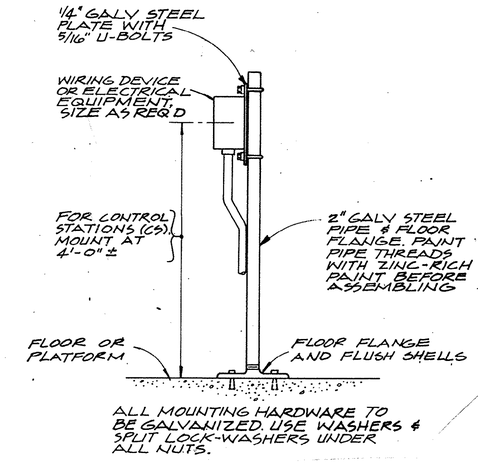

PEDESTAL MOUNTED DETAIL (404)

NTS

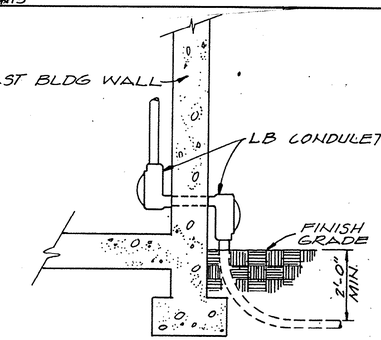

CONDUIT ENTRANCE (405)

NTS

7-05-013-S

REGISTERED PROFESSIONAL ENGINEER — SOUTH CAROLINA — RICHARD A. FIRSCHORN

CH2M HILL

DSGN	R. JOHNSON
DR	P. OAKES
CHK	B. NAGEL
APVD	R.A. HIRSEKORN

NO.	DATE	REVISION	BY	APVD

REUSE OF DOCUMENTS

THIS DOCUMENT, AND THE IDEAS AND DESIGNS INCORPORATED HEREIN, AS AN INSTRUMENT OF PROFESSIONAL SERVICE, IS THE PROPERTY OF CH2M HILL AND IS NOT TO BE USED, IN WHOLE OR IN PART, FOR ANY OTHER PROJECT WITHOUT THE WRITTEN AUTHORIZATION OF CH2M HILL.

©CH2M HILL

VERIFY SCALES

BAR IS ONE INCH ON ORIGINAL DRAWING. 0 — 1"

IF NOT ONE INCH ON THIS SHEET, ADJUST SCALES ACCORDINGLY.

MODIFICATIONS TO THE J. LAMBERT SCHWARTZ WWTP

THE GRAND STRAND WATER AND SEWER AUTHORITY

ELECTRICAL DETAILS AND LEGEND

DWG NO. E-1

DATE AUG 1985

PROJ NO. SA19793.A0

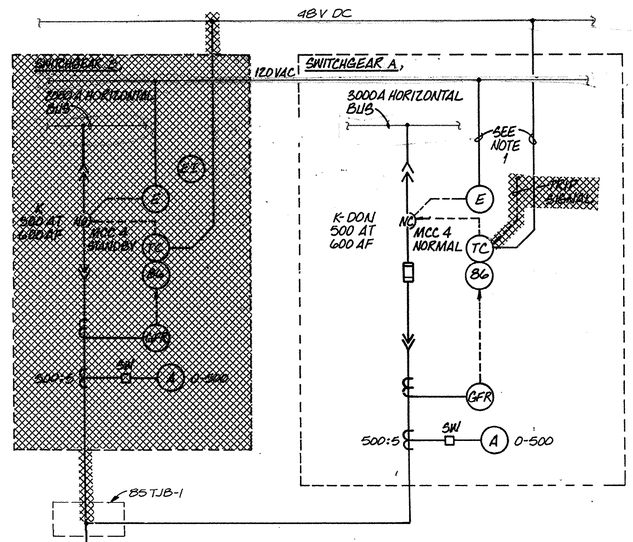

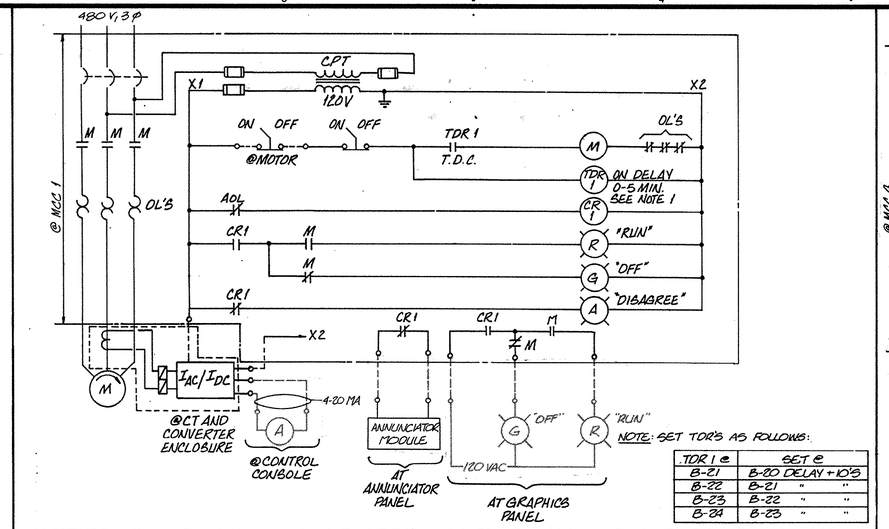

NOTE: SET TDR'S AS FOLLOWS:

TDR 1 @	SET @
B-21	B-20 DELAY + 10'S
B-22	B-21 " "
B-23	B-22 " "
B-24	B-23 " "

ROTATING BIOLOGICAL CONTACTORS ELEMENTARY CONTROL DIAGRAM

B-21, B-22, B-23, B-24

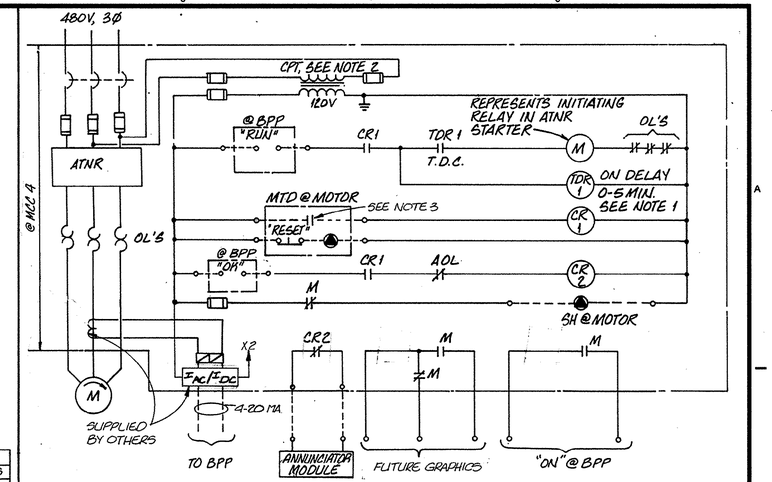

NOTES:

1. SET TDR1 AND RESET TIMING TIMERS TO CONFORM WITH THE FOLLOWING STARTING SEQUENCE DURING NORMAL AND STANDBY POWER STARTUP.

   1. INFLUENT BLOWERS NO. 1 MTI 1
   2. HYDROPNEUMATIC PUMP NO. 1 (P-11)
   3. AIR COMPRESSOR NO. 1
   4. PRE-AERATION BLOWER NO. 1 (M-1)
   5. PRE-AERATION BLOWER NO. 2 (M-2)
   6. PRE-AERATION BLOWER NO. 3 (M-3)
   7. EFFLUENT PUMP (P-1) (P-2) (P-3)
   8. DIGESTER SLUDGE PUMP NO. 1 (P-7)
   9. SECONDARY SLUDGE PUMP NO. 1 (P-8)
   10. SECONDARY SLUDGE PUMP NO. 2 (P-9)
   11. DIGESTER NO. 1 MIXERS
   12. DIGESTER NO. 2 MIXERS
   13. PLANT SITE LIFT STATION MCC
   14. PRIMARY SCUM PUMP P-3
   15. PRIMARY SCUM PUMP P-4
   16. WELL PUMP P-1
   17. GRIT PUMP (P-1)
   18. BOILERS 1 & 2
   19. BIO DISC UNIT NO. 1 DRIVE NO. 1
   20. BIO DISC UNIT NO. 1 DRIVE NO. 2
   21. BIO DISC UNIT NO. 1 DRIVE NO. 3
   22. BIO DISC UNIT NO. 1 DRIVE NO. 4
   23. BIO DISC UNIT NO. 1 DRIVE NO. 5
   24. BIO DISC UNIT NO. 1 DRIVE NO. 6
   25. BIO DISC UNIT NO. 2 DRIVE NO. 1
   26. BIO DISC UNIT NO. 2 DRIVE NO. 2
   27. BIO DISC UNIT NO. 2 DRIVE NO. 3
   28. BIO DISC UNIT NO. 2 DRIVE NO. 4
   29. BIO DISC UNIT NO. 2 DRIVE NO. 5
   30. BIO DISC UNIT NO. 2 DRIVE NO. 6
   31. BIO DISC UNIT NO. 3 DRIVE NO. 1
   32. BIO DISC UNIT NO. 3 DRIVE NO. 2
   33. BIO DISC UNIT NO. 3 DRIVE NO. 3
   34. BIO DISC UNIT NO. 3 DRIVE NO. 4
   35. BIO DISC UNIT NO. 3 DRIVE NO. 5
   36. BIO DISC UNIT NO. 3 DRIVE NO. 6
   37. BIO DISC UNIT NO. 4 DRIVE NO. 1
   38. BIO DISC UNIT NO. 4 DRIVE NO. 2
   39. BIO DISC UNIT NO. 4 DRIVE NO. 3
   40. BIO DISC UNIT NO. 4 DRIVE NO. 4
   41. BIO DISC UNIT NO. 4 DRIVE NO. 5
   42. BIO DISC UNIT NO. 4 DRIVE NO. 6

   A. TIMERS SHALL BE SET APART ENOUGH SO THAT THE SECOND MOTOR DOES NOT START UNTIL THE PREVIOUS MOTOR IS RUNNING AT FULL SPEED.

   B. IF ANY OF THE ABOVE MOTORS IS DOWN, CORRESPONDING STANDBY MOTOR SHALL BE TURNED ON & AND THE TIMER SET.

   C. IF ANY OF THE ABOVE MOTORS IS DOWN, BUT WITH BOTH MOTORS, BOTH MOTORS SHOULD HAVE THE TIMERS SET TO BE IN THE SAME STEP IN THE STARTING SEQUENCE, I.E., AIR COMPRESSORS 1 & 2, ETC.

2. SIZE CPT TO SUPPORT SURGE PROTECTION RELAYS AT BPP.

3. MTD CONTACT CLOSES WITH POWER APPLIED AND MOTOR TEMPERATURE NOT HIGH. MTD CONTACT IS OPEN WHEN POWER IS OFF OR MOTOR TEMPERATURE IS HIGH. IF THE MTD FURNISHED HAS A DIFFERENT ACTION, THE CONTRACTOR SHALL MODIFY CONTROLS SO FUNCTION IS IDENTICAL TO THAT SHOWN.

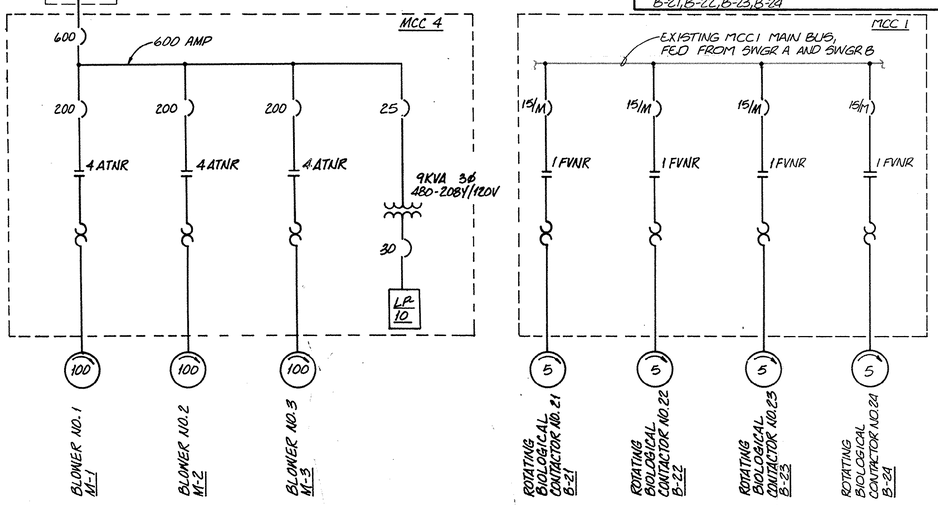

NOTES:

1. CIRCUIT EXISTS IN SWITCHGEAR. EXTEND TO NEW CIRCUIT BREAKER.
2. NOT IN CONTRACT

ONE-LINE DIAGRAM

PRE-AERATION BLOWERS ELEMENTARY CONTROL DIAGRAMS

M-1, M-2, M-3

7-05-014-S

OVERLAY IDENTIFICATION	COMPOSITE
PROJ NO.	OVERLAY
CONTRACT	SCREEN

SOUTH CAROLINA PROFESSIONAL ENGINEER — RICHARD A. HIRSEKORN — REGISTERED — Richard A. Hirsekorn — Jan 7, 1986

CH2M HILL

DSGN	R. JOHNSON
DR	HALES / JACKSON
CHK	B. NAGEL
APVD	R.A. HIRSEKORN

NO.	DATE	REVISION	BY	APVD

REUSE OF DOCUMENTS
THIS DOCUMENT, AND THE IDEAS AND DESIGNS INCORPORATED HEREIN, AS AN INSTRUMENT OF PROFESSIONAL SERVICE, IS THE PROPERTY OF CH2M HILL AND IS NOT TO BE USED, IN WHOLE OR IN PART, FOR ANY OTHER PROJECT WITHOUT THE WRITTEN AUTHORIZATION OF CH2M HILL.
©CH2M HILL

VERIFY SCALES
BAR IS ONE INCH ON ORIGINAL DRAWING.
0 1"
IF NOT ONE INCH ON THIS SHEET, ADJUST SCALES ACCORDINGLY.

MODIFICATIONS TO THE J. LAMBERT SCHWARTZ WWTP

THE GRAND STRAND WATER AND SEWER AUTHORITY

SINGLE LINE AND MOTOR CONTROL DIAGRAMS

DWG NO. E-2
DATE AUG 1985
PROJ NO. SA19793.A0

PLANT
1/8" = 1'-0"

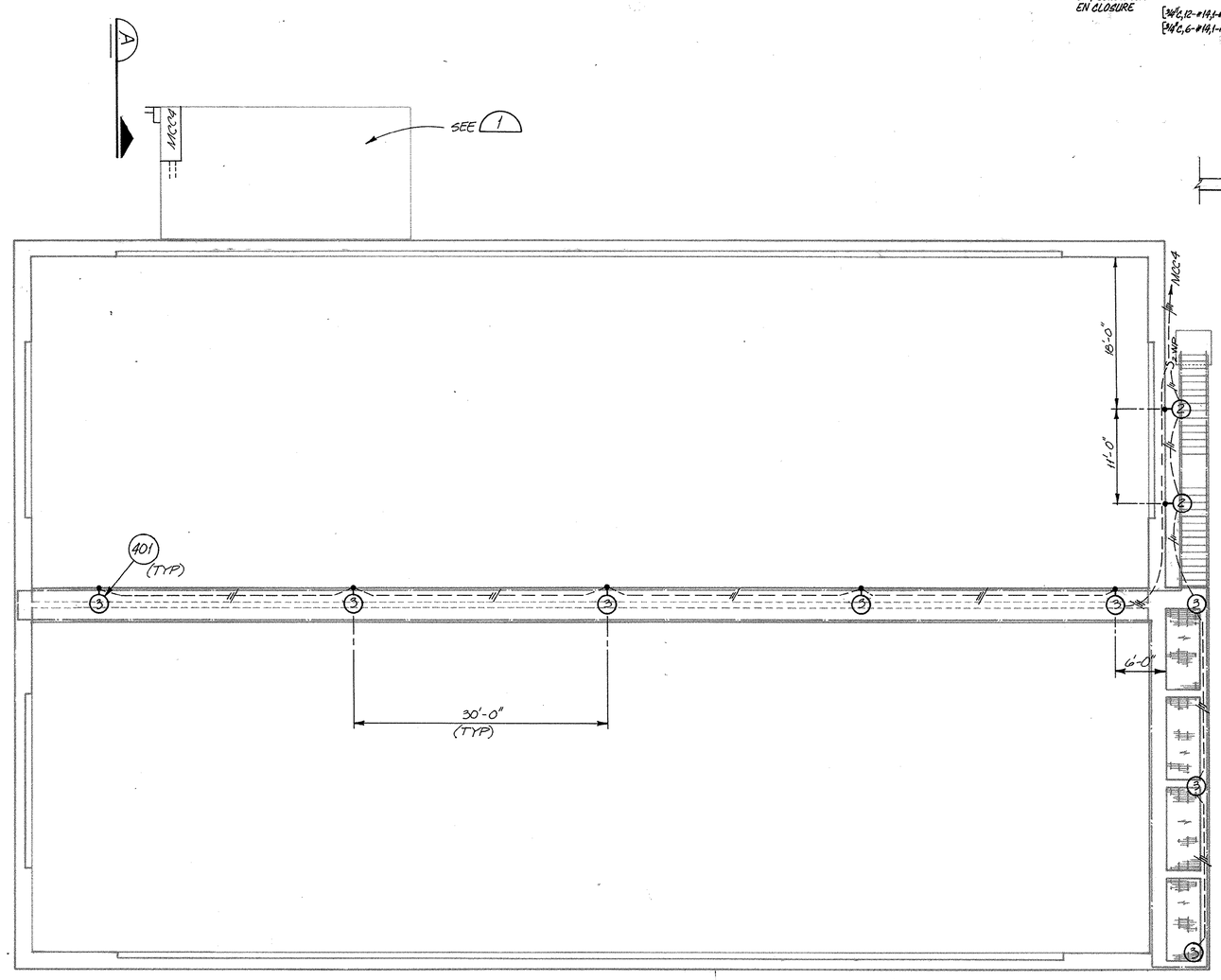

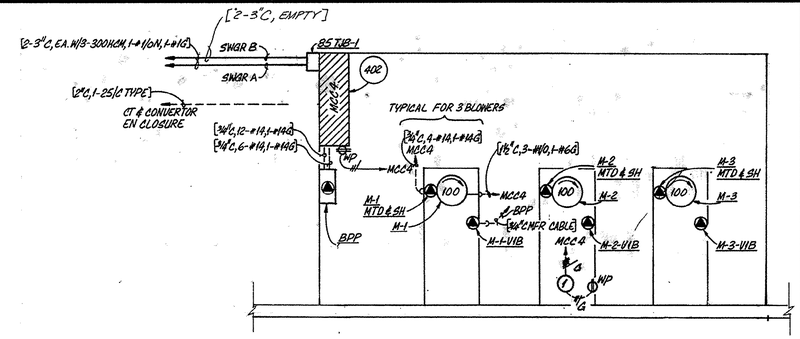

BLOWER FACILITY DETAIL 1

NTS

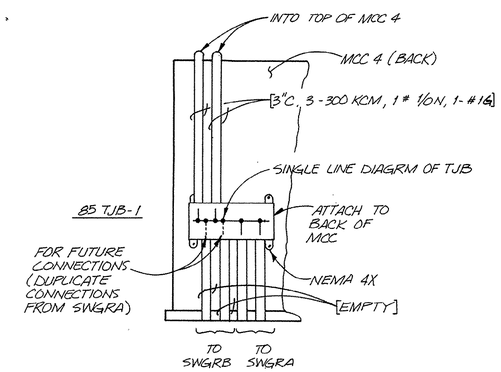

SECTION A

NTS

7-05-015-S

CH2M HILL	DSGN R. JOHNSON				
	DR R. JACKSON				
	CHK B. NAGEL				
	APVD R. HIRSEKORN	NO.	DATE	REVISION	BY / APVD

REUSE OF DOCUMENTS
THIS DOCUMENT, AND THE IDEAS AND DESIGNS INCORPORATED HEREIN, AS AN INSTRUMENT OF PROFESSIONAL SERVICE, IS THE PROPERTY OF CH2M HILL AND IS NOT TO BE USED, IN WHOLE OR IN PART, FOR ANY OTHER PROJECT WITHOUT THE WRITTEN AUTHORIZATION OF CH2M HILL.
©CH2M HILL

VERIFY SCALES
BAR IS ONE INCH ON ORIGINAL DRAWING.
0 1"
IF NOT ONE INCH ON THIS SHEET, ADJUST SCALES ACCORDINGLY.

MODIFICATIONS TO THE J.LAMBERT SCHWARTZ WWTP
THE GRAND STRAND WATER AND SEWER AUTHORITY

PREAERATION BASIN AND BLOWER FACILITY ELECTRICAL PLAN

SHEET
DWG NO. E-3
DATE AUG 1985
PROJ NO. SA19793.A0

SA 19793.A0

OVERLAY IDENTIFICATION
PROJ NO. E-1 E-3
CONTRACT E-3 S
COMPOSITE
OVERLAY
SCREEN

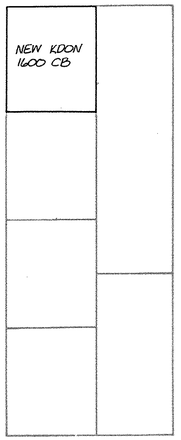

SWITCHGEAR "A" (NORMAL POWER)
NTS

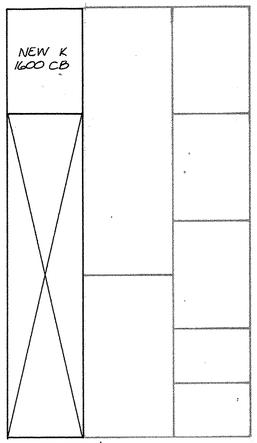

SWITCHGEAR "B" (EMERGENCY POWER)
NTS

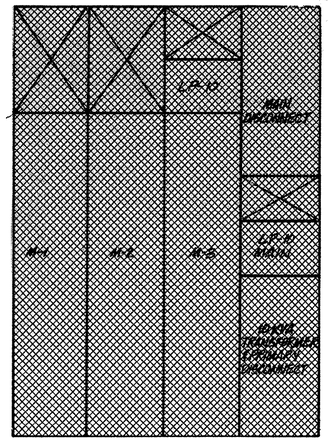

NEMA 3R NON-WALK IN

MCC 4
NTS

INSTALL NEW CT'S AND CONVERTERS TO MATCH EXISTING ITEMS IN OTHER R.B.C. UNITS

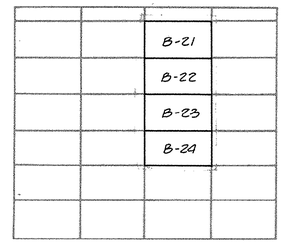

C.T. & CONVERTER ENCLOSURE
NTS

NOTE: NOT IN CONTRACT

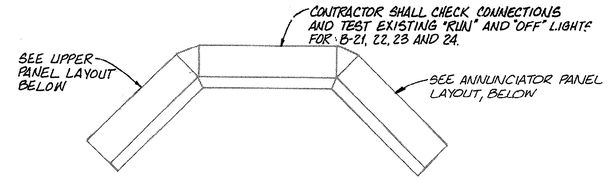

CONTROL CONSOLE PLAN
NTS

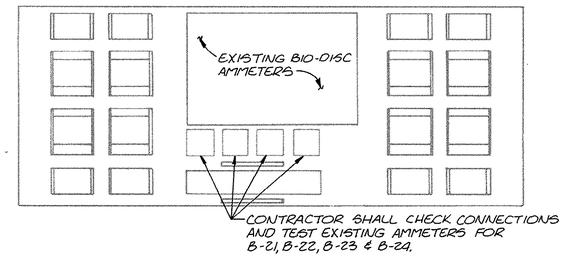

UPPER PANEL LAYOUT
NTS

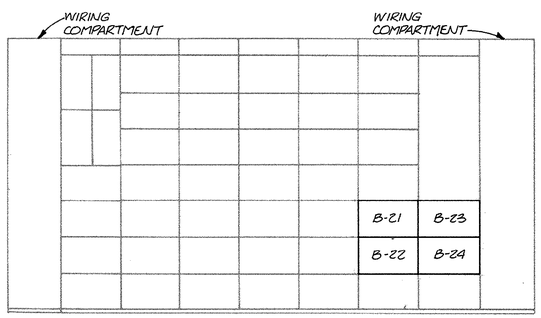

MCC 1
NTS

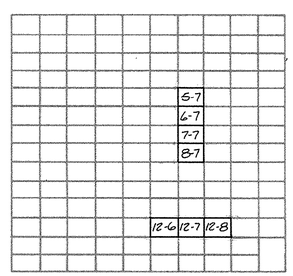

NOTES:
1. CONTRACTOR SHALL CONNECT CIRCUIT, ENGRAVE WINDOWS AND TEST ANNUNCIATORS ACCORDING TO THE FOLLOWING:

POSITION	WINDOW ENGRAVING	FROM
5-7	ROTATING DISC MOTOR NO. B-21 DISAGREE	MCC1
6-7	ROTATING DISC MOTOR NO. B-22 DISAGREE	MCC1
7-7	ROTATING DISC MOTOR NO. B-23 DISAGREE	MCC1
8-7	ROTATING DISC MOTOR NO. B-24 DISAGREE	MCC1
12-6	PRE AERATION BLOWER 1 DISAGREE	MCC4
12-7	PRE AERATION BLOWER 2 DISAGREE	MCC4
12-8	PRE AERATION BLOWER 3 DISAGREE	MCC4

2. IF POSITIONS SHOWN ARE NOT VACANT, ARRANGE NEW ANNUNCIATORS IN VACANT SPACES, AS NEAR AS POSSIBLE TO PROCESS ORDER.

ANNUNCIATOR PANEL LAYOUT
NTS

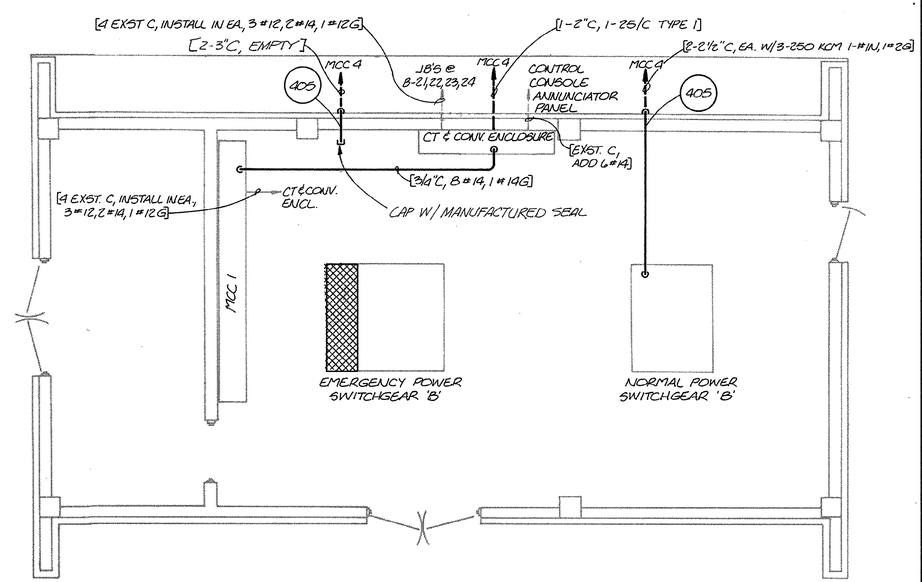

ELECTRICAL BUILDING
NTS

7-05-016-S

OVERLAY IDENTIFICATION | COMPOSITE E-4 | OVERLAY E-4.1 | SCREEN 8
PROJ NO. | CONTRACT

SOUTH CAROLINA PROFESSIONAL ENGINEER RICHARD A. HIRSEKORN

CH2M HILL

DSGN R. JOHNSON					
DR M. HALES					
CHK B. NAGEL					
APVD R.A. HIRSEKORN	NO.	DATE	REVISION	BY	APVD

REUSE OF DOCUMENTS
THIS DOCUMENT, AND THE IDEAS AND DESIGNS INCORPORATED HEREIN, AS AN INSTRUMENT OF PROFESSIONAL SERVICE, IS THE PROPERTY OF CH2M HILL AND IS NOT TO BE USED, IN WHOLE OR IN PART, FOR ANY OTHER PROJECT WITHOUT THE WRITTEN AUTHORIZATION OF CH2M HILL.
©CH2M HILL

VERIFY SCALES
BAR IS ONE INCH ON ORIGINAL DRAWING.
0 1"
IF NOT ONE INCH ON THIS SHEET, ADJUST SCALES ACCORDINGLY.

MODIFICATIONS TO THE J. LAMBERT SCHWARTZ WWTP
THE GRAND STRAND WATER AND SEWER AUTHORITY

ELECTRICAL PLANS AND EQUIPMENT ELEVATIONS

DWG NO. E-4
DATE AUG 1985
PROJ NO. SA19793.A0

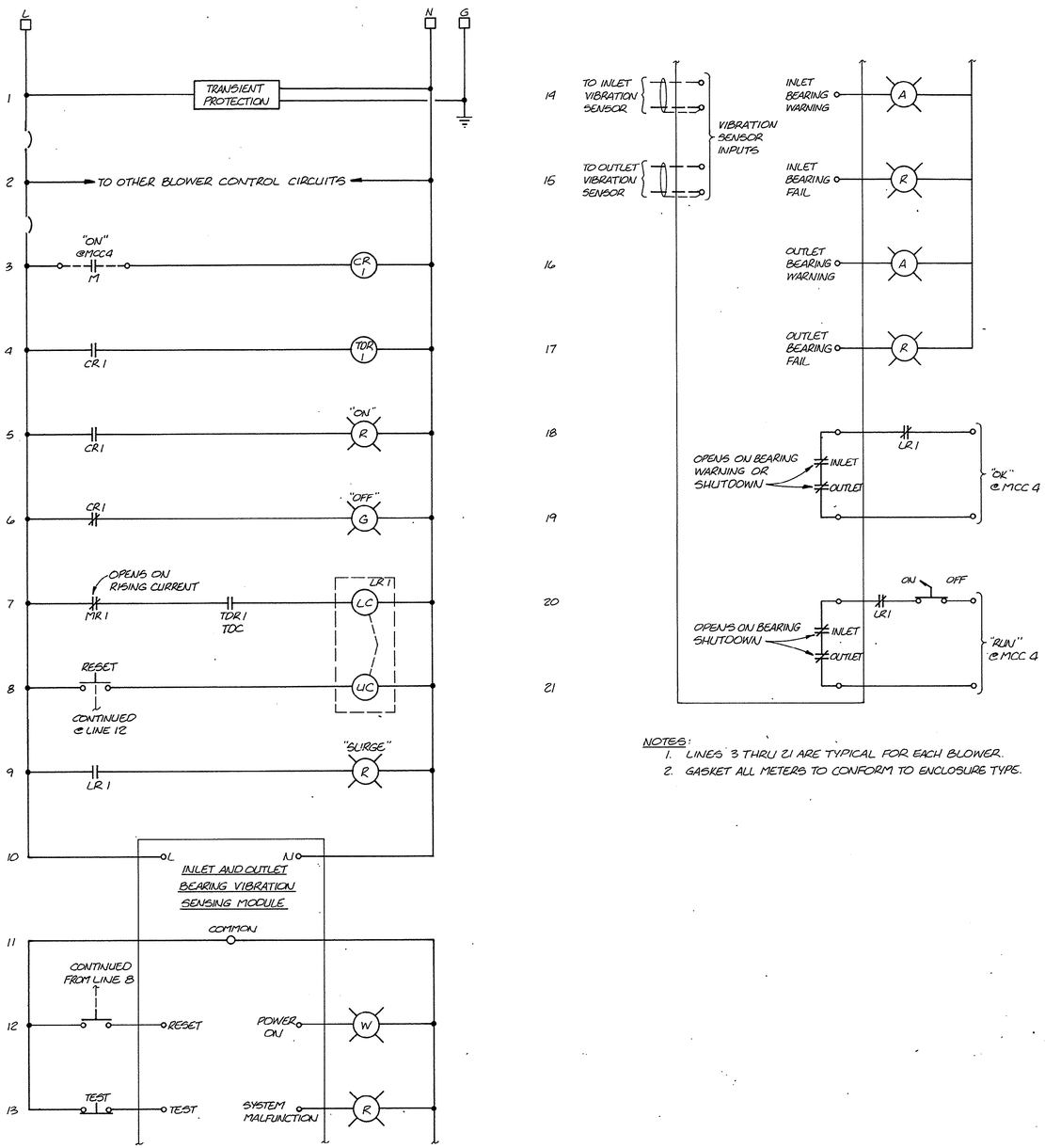

NOTES:
1. LINES 3 THRU 21 ARE TYPICAL FOR EACH BLOWER.
2. GASKET ALL METERS TO CONFORM TO ENCLOSURE TYPE.

BPP FUNCTIONAL ELEMENTARY CONTROL DIAGRAM

NTS

LUMINAIRE SCHEDULE

SYMBOL	TYPE	VOLTAGE	DESCRIPTION	MANUFACTURER	CATALOG NO.	LAMPS	MOUNTING
1	H.P.S. AREA	120 V	H.I.D. WET LOCATION FIXTURE W/ PHOTO CONTROL	HI-TEK	TW 150S 120 PE	150 W H.P.S.	WALL, 8' A.F.F.
2	ENCLOSED INCAND	120V	WET LOCATION FIXTURE W/ GLOBE AND GUARD	APPLETON	VG AT 10TSG	150 W A21	WALL, 7' A.F.F.
3	ENCLOSED INCAND.	120V	45° WET LOCATION FIXTURE W/ GLOBE AND GUARD	APPLETON	V MAN Z0125-A	200 W PS30	STANCHION

PANEL LP-10 LOCATION:MCC 4

SERVICE-VOLTAGE: 208Y/120 3 PHASE 4 WIRE

TYPE:60 A MLO

FULL NEUTRAL FEEDER SIZE: AS SHOWN

IN MCC MOUNTING

CIRCUIT TITLE	BKR	CKT NO.	CKT NO.	BKR	CIRCUIT TITLE
BLOWER PAD LIGHTS	15/1	1	2	20/1	RECEPTACLES
WALKWAY & STAIR LIGHTS	20/2	3	4	15/1	BPP
		5	6	20/1	SPARE
SPARE	20/1	7	8	20/1	SPARE
SPARE	15/1	9	10	15/1	SPARE
SPACE		11	12		SPACE

7-05-017-S

SOUTH CAROLINA PROFESSIONAL ENGINEER RICHARD A. LIRSEKORN

CH2M HILL

DSGN	R. JOHNSON
DR	M. HALES
CHK	W. PEARSON
APVD	R.A. HIRSEKORN

NO.	DATE	REVISION	BY	APVD

REUSE OF DOCUMENTS
THIS DOCUMENT, AND THE IDEAS AND DESIGNS INCORPORATED HEREIN, AS AN INSTRUMENT OF PROFESSIONAL SERVICE, IS THE PROPERTY OF CH2M HILL AND IS NOT TO BE USED, IN WHOLE OR IN PART, FOR ANY OTHER PROJECT WITHOUT THE WRITTEN AUTHORIZATION OF CH2M HILL.
©CH2M HILL

VERIFY SCALES
BAR IS ONE INCH ON ORIGINAL DRAWING.
0 1"
IF NOT ONE INCH ON THIS SHEET, ADJUST SCALES ACCORDINGLY.

MODIFICATIONS TO THE J. LAMBERT SCHWARTZ WWTP

THE GRAND STRAND WATER AND SEWER AUTHORITY

WIRING DIAGRAMS AND SCHEDULES

DWG NO. E-5
DATE AUG 1985
PROJ NO. SA19793.A0

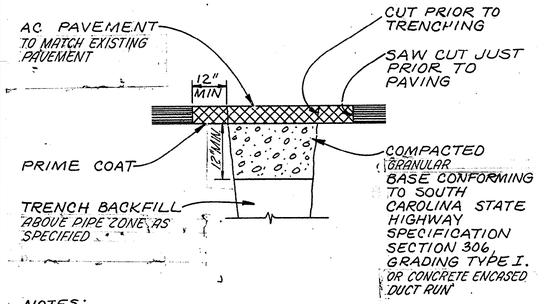

NOTES:

1. PRIME COAT: MC-30 OR RC-30 FOR PRIMING THE PREPARED BASE COURSE. THE MATERIAL USED SHALL MEET THE REQUIREMENTS OF SUBSECTIONS 406.03 AND 406.04 OF THE SOUTH CAROLINA STATE HIGHWAY SPECIFICATIONS.
2. THE ASPHALT CONCRETE FOR PAVING DESIGNATED AREAS SHALL BE A HOT PLANT MIX AND SHALL CONFORM TO THE REQUIREMENTS OF SECTION 403 OF THE SOUTH CAROLINA STATE HIGHWAY SPECIFICATIONS FOR TYPE 1 SURFACE COURSE.

ASPHALT CONCRETE

SURFACE RESTORATION

NTS

101

DETAIL OF REINFORCEMENT - LAP LENGTHS

BAR SIZE		#6 OR SMALLER	#7	#8	#9	#10	#11
CONC DESIGN STRENGTH		3000 PSI					
GR 40	TOP BAR*	34 DIA, MIN 1'-6"	3'-0"	3'-9"	4'-8"	6'-0"	7'-3"
	OTHER BAR	24 DIA, MIN 1'-0"	2'-0"	2'-8"	3'-4"	4'-4"	5'-2"
GR 60	TOP BAR*	49 DIA, MIN 2'-0"	4'-2"	5'-6"	7'-0"	8'-8"	10'-10"
	OTHER BAR	35 DIA, MIN 1'-6"	3'-0"	4'-0"	5'-0"	6'-6"	7'-9"
CONC DESIGN STRENGTH		3500 PSI					
GR 40	TOP BAR*	33 DIA, MIN 1'-6"	2'-9"	3'-6"	4'-4"	5'-6"	6'-8"
	OTHER BAR	24 DIA, MIN 1'-0"	1'-10"	2'-6"	3'-2"	4'-0"	4'-10"
GR 60	TOP BAR*	47 DIA, MIN 2'-0"	3'-10"	5'-2"	6'-6"	8'-2"	10'-0"
	OTHER BAR	34 DIA, MIN 1'-6"	2'-10"	3'-9"	4'-8"	6'-0"	7'-3"
CONC DESIGN STRENGTH		4000 PSI					
GR 40	TOP BAR*	32 DIA, MIN 1'-6"	2'-6"	3'-3"	4'-0"	5'-0"	6'-4"
	OTHER BAR	22 DIA, MIN 1'-0"	1'-9"	2'-4"	3'-0"	3'-8"	4'-6"
GR 60	TOP BAR*	45 DIA, MIN 2'-0"	3'-8"	4'-9"	6'-0"	7'-8"	9'-6"
	OTHER BAR	32 DIA, MIN 1'-6"	2'-8"	3'-6"	4'-4"	5'-6"	6'-9"

*TOP BARS SHALL BE DEFINED AS ANY HORIZONTAL BARS PLACED SUCH THAT MORE THAN 12" OF FRESH CONCRETE IS CAST IN THE MEMBER BELOW THE BAR, IN ANY SINGLE POUR. HORIZONTAL WALL BARS ARE CONSIDERED TOP BARS.

6. CONT GALV STL WS AS SPEC, SHALL BE INSTALLED IN ALL CJ IN WALLS OF WATER HOLDING BASINS AND CHANNELS, EXCEPT WHERE INDICATED OTHERWISE.
7. PROVIDE AND INSTALL SELECT GRANULAR MATERIAL AS SPECIFIED UNDER ALL SLABS AND FOOTINGS TO UNDISTURBED EARTH WITH MINIMUM THICKNESS EQUAL TO 6", UNLESS OTHERWISE NOTED.

201

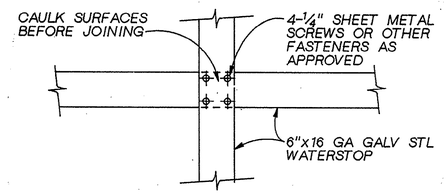

STEEL-STEEL WS SPLICE

NTS

204

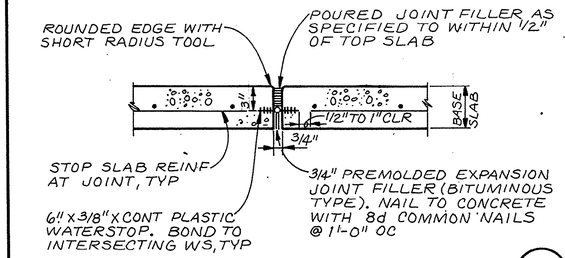

BASE SLAB EXPANSION JOINT

NTS

208

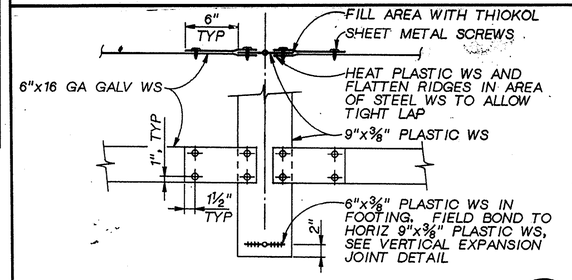

STEEL-PLASTIC WS SPLICE

NTS

205

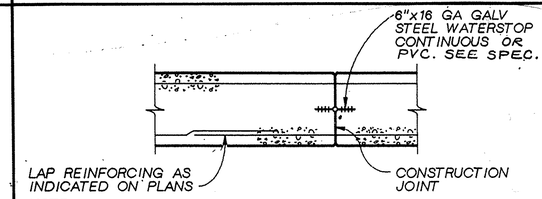

NOTE:
REINFORCING CONTINUOUS ACROSS JOINT. STAGGER MINIMUM 40 BAR DIAMETERS UNLESS INDICATED OTHERWISE.

PLAN

VERTICAL & BASE SLAB CONSTRUCTION JT.

NTS

209

GENERAL STRUCTURAL NOTES

REINFORCING DETAILS

1. UNLESS OTHERWISE SHOWN, CONC WALLS AND SLABS SHALL BE REINF AS FOLLOWS: #4@12" EW CENTER OF 6" SECTIONS; #5@12" EW CENTER OF 8" SECTIONS; #4@12" EWEF OF 10" SECTIONS; #5@12" EWEF OF 12" SECTIONS. SINGLE MAT REINF SHALL BE AT CENTER OF SECTION, UNLESS SHOWN OTHERWISE.
2. MIN CLR FOR REINF BARS, UNLESS SHOWN OTHERWISE, SHALL BE 3" WHEN PLACED ON GROUND; FOR SURFACES EXPOSED TO WATER OR WEATHER - 1½" CLR FOR #5 BAR AND SMALLER AND 2" CLR FOR LARGER BARS; INTERIOR SLABS ¾" CLR, INTERIOR BEAMS 1½" CLR.
3. REFER TO WALL CORNER AND WALL INTERSECTION REINFORCING DETAIL. IN GENERAL, THE WALL CORNER REINFORCING SIZES AND SPACINGS SHALL BE CALLED OUT ON THE PLANS AND REFERENCED TO THESE DETAILS AND THE TYPICAL HORIZONTAL WALL REINFORCING SHALL LAP WITH THE HORIZONTAL REINFORCING.
4. ALL BENDS, UNLESS OTHERWISE SHOWN, SHALL BE A 90° DEGREE STANDARD HOOK AS DEFINED IN LATEST EDITION OF ACI 318.
5. UNLESS OTHERWISE NOTED, ALL WALL REINF BARS SHALL BE CONT AROUND CORNERS AND THROUGH COL OR PILASTERS. REINF SHALL BE EXTENDED INTO CONNECTING WALLS AND LAPPED ON THE OPPOSITE FACE OF THE CONNECTING WALLS, AS INDICATED ELSEWHERE ON THIS SHEET. VERT WALL BARS SHALL BE LAPPED WITH DOWELS FROM BASE SLABS AND EXTENDED INTO THE TOP FACE OF ROOF SLABS AND LAPPED WITH TOP SLAB REINF. UNLESS INDICATED OTHERWISE, CONTRACTOR MAY SPLICE CONTINUOUS SLAB OR LONGITUDINAL BEAM BARS AT LOCATIONS OF HIS CHOOSING, EXCEPT THAT TOP BAR SPLICES SHALL BE LOCATED AT MIDSPAN AND BOTTOM BAR SPLICES SHALL BE LOCATED AT SUPPORTS. ALL REINF BENDS AND LAPS, UNLESS OTHERWISE NOTED, SHALL SATISFY THE FOLLOWING MINIMUM REQUIREMENT:

200

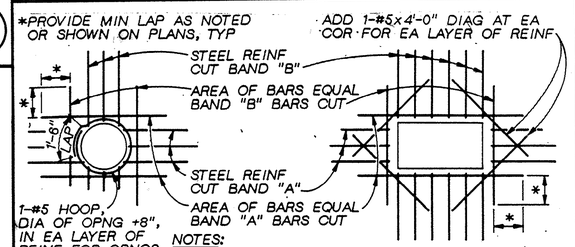

NOTES:

1. TYPICAL FOR ALL OPENINGS IN CONCRETE WALLS AND SLABS UNLESS INDICATED OTHERWISE ON PLANS.
2. DO NOT WELD REINFORCEMENT TO PIPE SLEEVES AND INSERTS.

OPENING REINFORCING

NTS

202

- NOT USED -

206

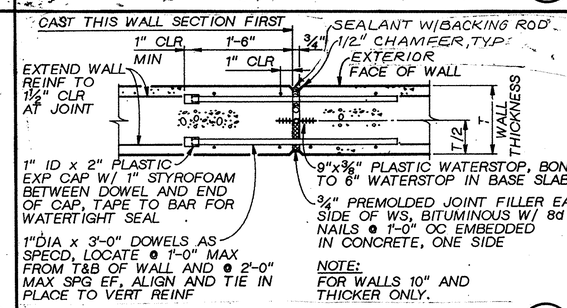

NOTE:
FOR WALLS 10" AND THICKER ONLY.

VERTICAL EXPANSION JOINT

NTS

210

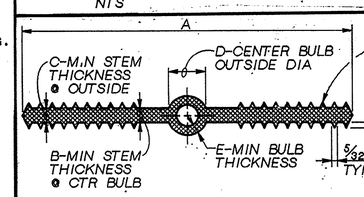

SIZE	A	B	C	D	E	F
4"x3/16"	4"	3/16"	3/16"	¾"	¼"	4
6"x3/8"	6"	3/8"	3/8"	⅞"	¼"	6
9"x3/8"	9"	3/8"	3/8"	1"	¼"	8

NOTES:

1. MATERIAL QUALITY PER SPECIFICATIONS.
2. DIM REQUIREMENTS INDICATED SHOULD BE GIVEN TO SUPPLIERS PRIOR TO PLACING ORDERS.
3. NON-ROUND CENTER BULBS SHALL HAVE A MIN OUTSIDE DIM OF 'D'.

PLASTIC WATERSTOP

NTS

203

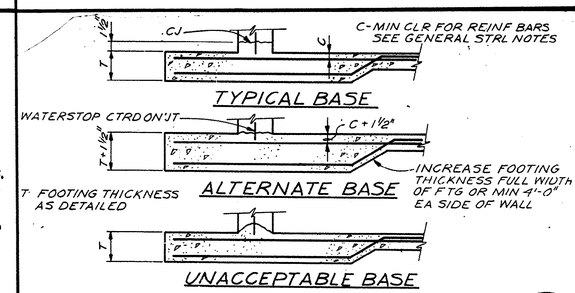

WALL BASE CONSTR JOINT

NTS

207

NOTE:
BASE PLATE METAL SHALL MATCH HANDRAIL, PROVIDE PROTECTION FOR DISSIMILAR METALS AND CONCRETE PER SPECIFICATIONS.

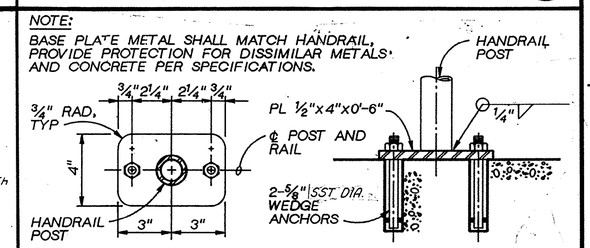

HANDRAIL POST ANCHORAGE

NTS

7-05-018-S

211

RICHARD A. HIRSEKORN, REGISTERED PROFESSIONAL ENGINEER, SOUTH CAROLINA, No. 7636

CH2M HILL

DSGN	V. BATES/J. MAXFIELD
DR	K. ANDERSEN
CHK	T.L. BELSER
APVD	R.A. HIRSEKORN

NO.	DATE	REVISION	BY	APVD

REUSE OF DOCUMENTS
THIS DOCUMENT, AND THE IDEAS AND DESIGNS INCORPORATED HEREIN, AS AN INSTRUMENT OF PROFESSIONAL SERVICE, IS THE PROPERTY OF CH2M HILL AND IS NOT TO BE USED, IN WHOLE OR IN PART, FOR ANY OTHER PROJECT WITHOUT THE WRITTEN AUTHORIZATION OF CH2M HILL.
©CH2M HILL

VERIFY SCALES
BAR IS ONE INCH ON ORIGINAL DRAWING.
0 1"
IF NOT ONE INCH ON THIS SHEET, ADJUST SCALES ACCORDINGLY.

MODIFICATIONS TO THE J. LAMBERT SCHWARTZ WWTP
THE GRAND STRAND WATER AND SEWER AUTHORITY

STRUCTURAL STANDARD DETAILS

DWG NO. D-1
DATE AUG 1985
PROJ NO. SA19793.A0

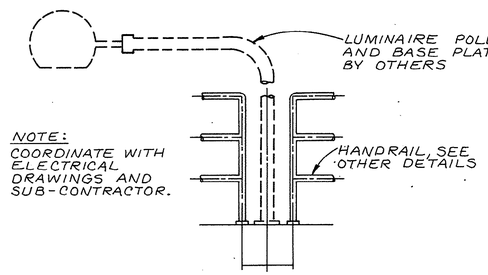

HANDRAIL AT LUMINAIRE

NTS

(212)

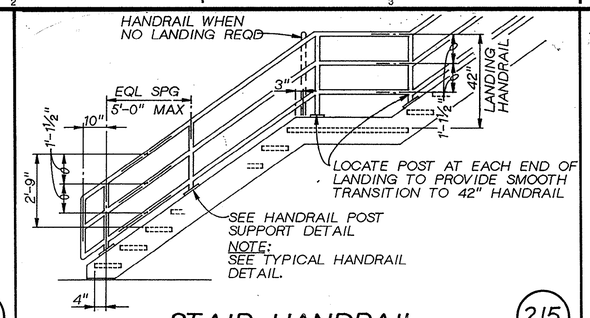

STAIR HANDRAIL

NTS

(215)

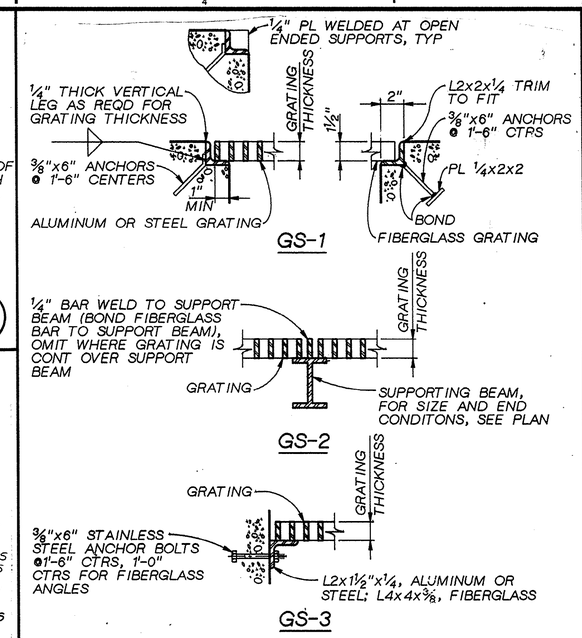

GRATING SUPPORT

NTS

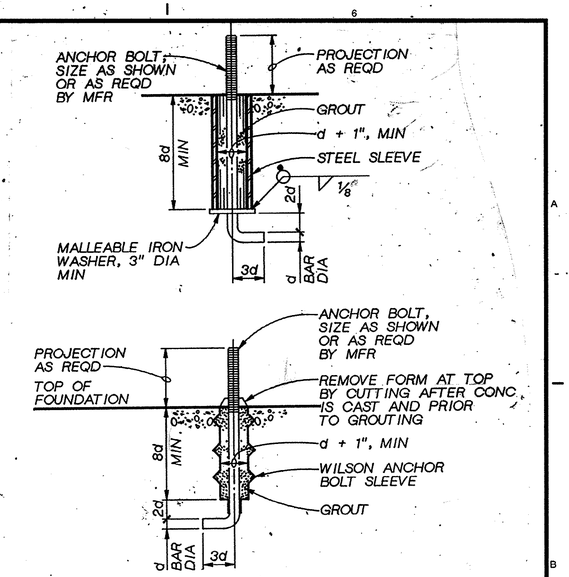

ALTERNATE MACHINERY ANCHOR BOLT

NTS

(219)

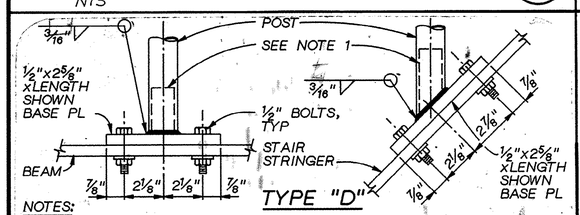

NOTES:

1. WELD STEEL AND STAINLESS STEEL AS SHOWN. PROVIDE A SPECIAL CONNECTION FOR ALUMINUM THAT WILL DEVELOP FULL STRENGTH OF PIPE. SUBMIT TEST DATA ON SHOP DRAWINGS FOR REVIEW.
2. BOLT MATERIAL AND BASE PLATE SHALL BE AS SPECIFIED AND SHALL MATCH HANDRAIL MATERIAL, PROVIDE PROTECTION FOR DISSIMILIAR METALS AND CONCRETE PER SPECIFICATIONS.

HANDRAIL POST ANCHORAGE

NTS

(213)

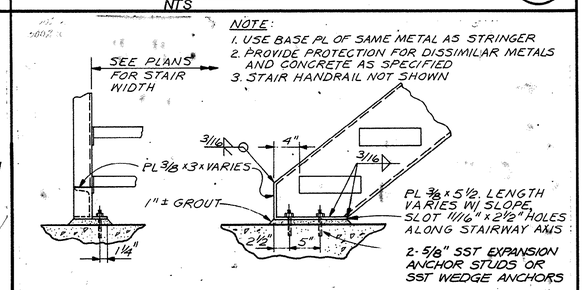

STAIR BOTTOM CONN

NTS

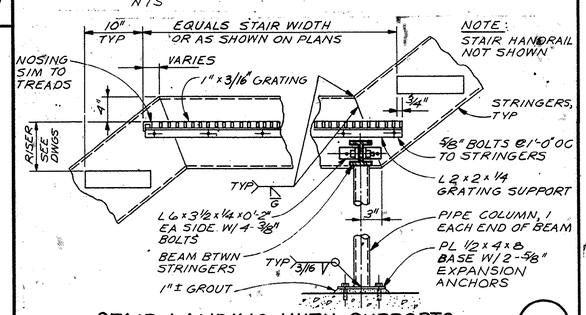

STAIR LANDING WITH SUPPORTS

NTS

(216)

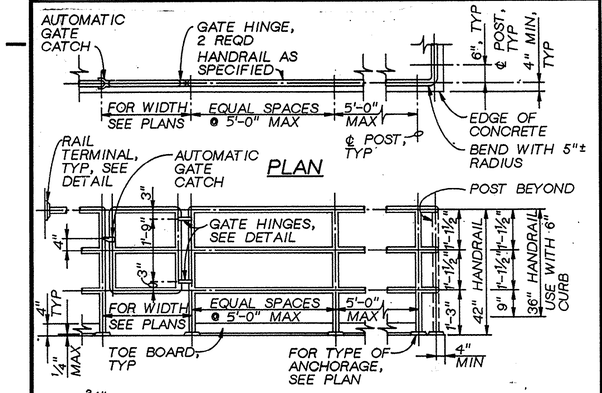

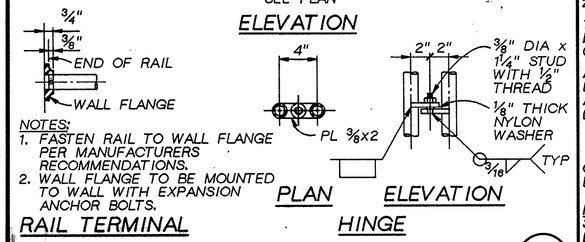

NOTES:

1. FASTEN RAIL TO WALL FLANGE PER MANUFACTURERS RECOMMENDATIONS.
2. WALL FLANGE TO BE MOUNTED TO WALL WITH EXPANSION ANCHOR BOLTS.

TYPICAL HANDRAIL

NTS

(214)

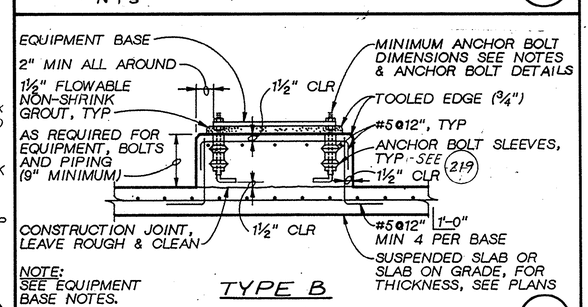

EQUIPMENT PAD

(217)

GRATING NOTES

1. EXTEND GRATING CONTINUOUSLY OVER GATE GUIDES AND GATES.
2. NOTCH GRATING SUPPORTS AT GATES AS REQUIRED.
3. GRATING SPAN ⟶ SEE PLAN.
4. WIDTH OF GRATING SECTIONS SHALL NOT EXCEED 3'-0".
5. SHOP DRAWINGS SHALL BE SUBMITTED TO THE ENGINEER BASED ON FIELD DIMENSIONS PRIOR TO FABRICATION.
6. MATERIAL FOR SUPPORTS OF STEEL AND ALUMINUM GATING TO BE SAME GRATING, EXCEPT METAL SUPPORTS THAT ARE TO BE EMBEDDED IN CONCRETE SHALL BE TYPE 316 STAINLESS STEEL.
7. STEEL GRATING AND SUPPORT TO BE GALVANIZED UNLESS NOTED OTHERWISE ON PLANS.
8. UNLESS NOTED OTHERWISE ON PLANS, GRATING THICKNESS SHALL BE AS TABULATED IN "GRATING THICKNESS TABLE" FOR APPLICABLE TRAFFIC.
9. BEARING BAR THICKNESS FOR GRATING TO BE 3/16" MINIMUM.
10. BAND ALL EDGES WITH 3/16 x DEPTH OF BEARING BAR.
11. PROVIDE MISCELLANEOUS GRATING FASTENERS AS REQUIRED.
12. TYPE OF MATERIAL USED SHALL BE AS SHOWN ON PLANS OR AS SPECIFIED. THIS STANDARD DETAIL INCLUDES 3 TYPES, ALTHOUGH ALL 3 MAY NOT BE INCLUDED IN PROJECT.

FOOT TRAFFIC

GRATING THICKNESS TABLE

MAXIMUM SPAN	ALUMINUM (IN.)	STEEL (IN.)	FIBERGLASS (IN.)
3'-6"	1¼"	1"	1½"
4'-0"	1½"	1"	1½"
4'-6"	1¾"	1"	MAXIMUM
5'-0"	1¾"	1¼"	ALLOWABLE
5'-6"	2"	1¼"	SPAN IS 4'-0"
6'-0"	2¼"	1½"	LIMIT
6'-6"	2¼"	1½"	DEFECTION
7'-0"	2½"	1¾"	TO ¼" MAX

(218)

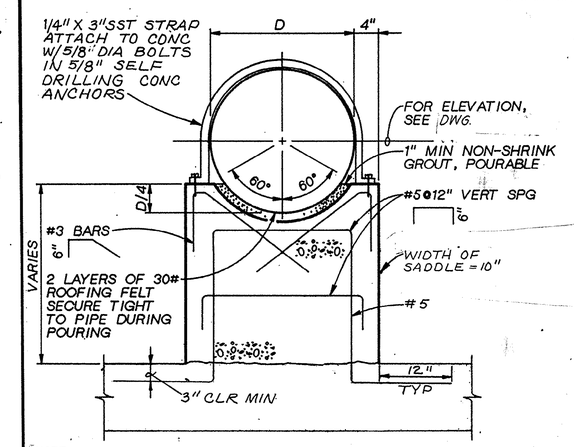

NOTE:
USE 2 LAYERS OF REINF
1 1/2" CLR OF CONCRETE

CONCRETE PIPE SUPPORT

NTS

(220)

7-05-019-S

SOUTH CAROLINA PROFESSIONAL ENGINEER REGISTERED RICHARD A. HIRSEKORN

CH2M HILL

DSGN	V. BATES/J. MAXFIELD
DR	K. ANDERSEN
CHK	T.L. BELSER
APVD	R.A. HIRSEKORN

NO.	DATE	REVISION	BY	APVD

REUSE OF DOCUMENTS

THIS DOCUMENT, AND THE IDEAS AND DESIGNS INCORPORATED HEREIN, AS AN INSTRUMENT OF PROFESSIONAL SERVICE, IS THE PROPERTY OF CH2M HILL AND IS NOT TO BE USED, IN WHOLE OR IN PART, FOR ANY OTHER PROJECT WITHOUT THE WRITTEN AUTHORIZATION OF CH2M HILL.

©CH2M HILL

VERIFY SCALES

BAR IS ONE INCH ON ORIGINAL DRAWING.
0 1"
IF NOT ONE INCH ON THIS SHEET, ADJUST SCALES ACCORDINGLY.

MODIFICATIONS TO THE J. LAMBERT SCHWARTZ WWTP

THE GRAND STRAND WATER AND SEWER AUTHORITY

STRUCTURAL STANDARD DETAILS

DWG NO. D-2
DATE AUG 1985
PROJ NO. SA19793.A0

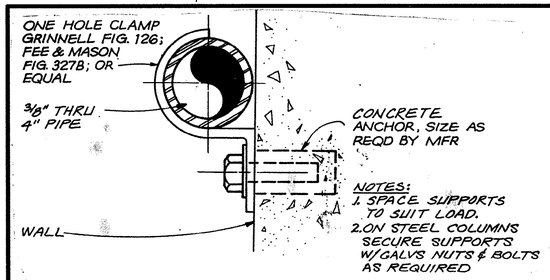

PIPE SUPPORT

NTS

300

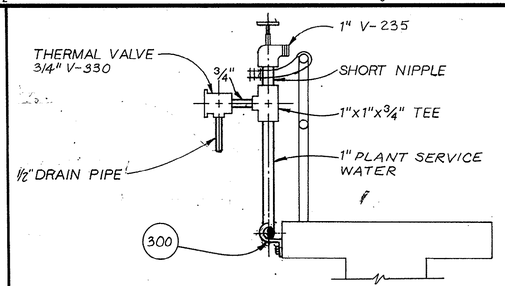

EXTERIOR HOSE VALVE

NTS

303

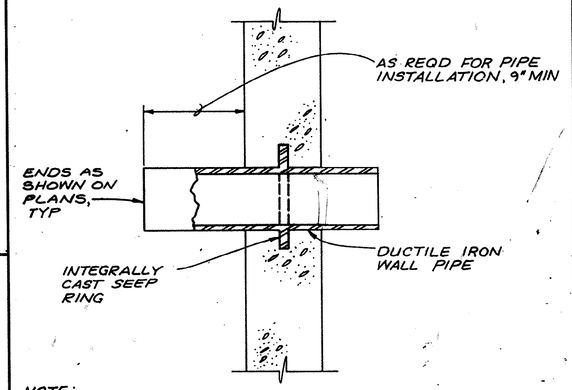

NOTE:
COAT WALL PIPE WITH SPECIFIED PAINT SYSTEM PRIOR TO CONCRETE PLACEMENT.

D.I. WALL PIPE

NTS

306

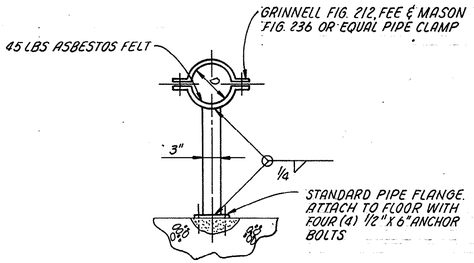

NOTE: HOT DIP GALVANIZE AFTER FABRICATION

PIPE SUPPORT

NTS

309

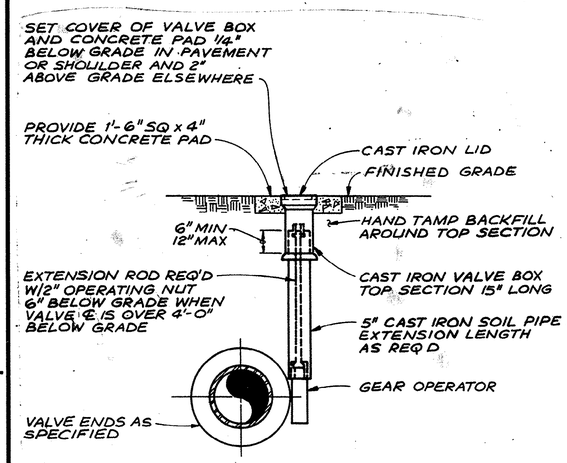

BURIED BUTTERFLY OR PLUG VALVE BOX SETTING

NTS

301

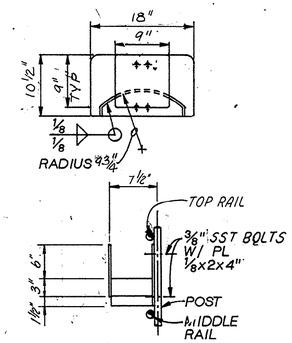

HANDRAIL POST MOUNTED

NOTE:
FABRICATE FROM 3/16" 6061-T6 ALUMINUM ALLOY PLATE

HOSE RACK DETAILS

NTS

304

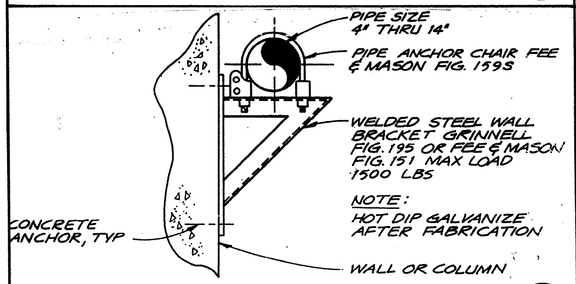

PIPE SUPPORT - MEDIUM

NTS

307

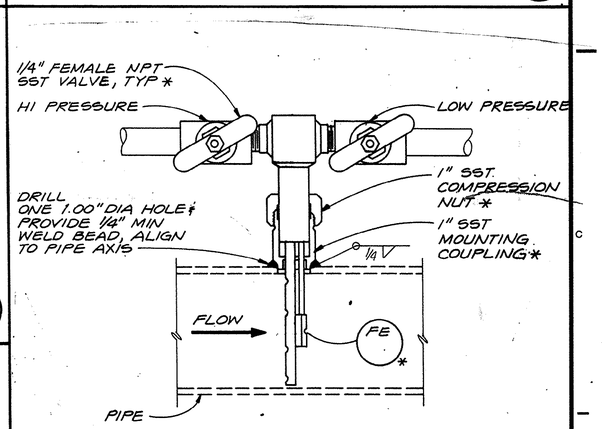

NOTES:
1. COMPONENTS DESIGNATED BY * ARE SUPPLIED BY INSTRUMENT MFR.
2. FOR PIPE TAP ORIENTATION, REFER TO THE MECHANICAL DRAWINGS.

PITOT FLOW ELEMENT INSTALLATION

NTS

7-05-020-S

310

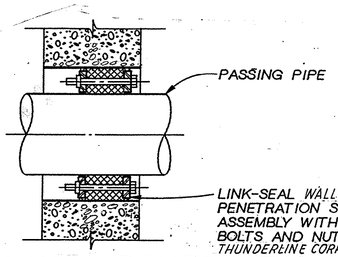

WALL PENETRATION SEAL DETAIL

NTS

302

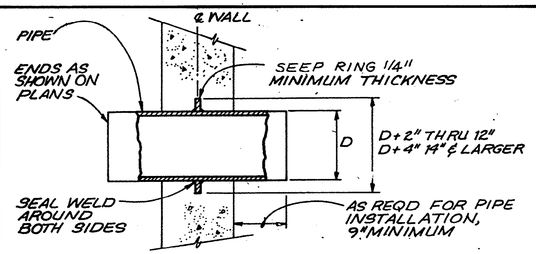

STEEL WALL PIPE

NTS

NOTE: SEEP RING SHALL BE SAME MATERIAL AS PIPE

305

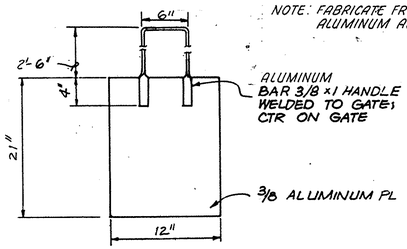

NOTE: FABRICATE FROM 6061-T6 ALUMINUM ALLOY PLATE

SLIDE GATE

NTS

308

SOUTH CAROLINA PROFESSIONAL ENGINEER RICHARD A. HIRSEKORN

CH2M HILL

DSGN	V. BATES
DR	K. ANDERSEN
CHK	T.L. BELSER
APVD	R.A. HIRSEKORN

NO.	DATE	REVISION	BY	APVD

REUSE OF DOCUMENTS

THIS DOCUMENT, AND THE IDEAS AND DESIGNS INCORPORATED HEREIN, AS AN INSTRUMENT OF PROFESSIONAL SERVICE, IS THE PROPERTY OF CH2M HILL AND IS NOT TO BE USED, IN WHOLE OR IN PART, FOR ANY OTHER PROJECT WITHOUT THE WRITTEN AUTHORIZATION OF CH2M HILL.

©CH2M HILL

VERIFY SCALES

BAR IS ONE INCH ON ORIGINAL DRAWING.
0 1"
IF NOT ONE INCH ON THIS SHEET, ADJUST SCALES ACCORDINGLY.

MODIFICATIONS TO THE J. LAMBERT SCHWARTZ WWTP

THE GRAND STRAND WATER AND SEWER AUTHORITY

MECHANICAL STANDARD DETAILS

DWG NO. D-3
DATE AUG 1988
PROJ NO. SA19793.A0