TIP-TOP TREE FARM EFFLUENT LAND APPLICATION PROJECT CONTRACTS 1, 2, 3, AND 4

GRAND STRAND WATER & SEWER AUTHORITY

Quality service now and in the future

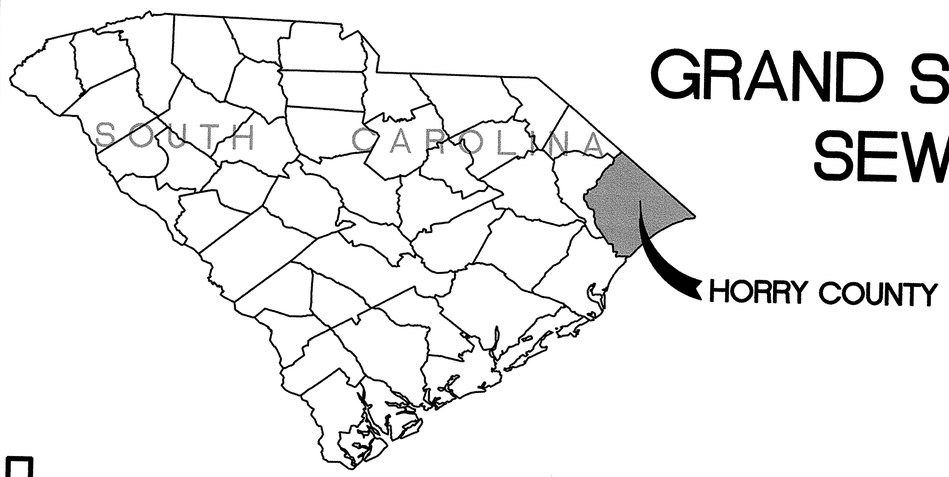

GRAND STRAND WATER AND SEWER AUTHORITY

THESE DRAWINGS REFLECT
AS-BUILT
CONDITIONS
REVIEWED BY: (INSPECTIONS) DATE 8-28-2001
REVIEWED BY: (ENGINEERING) DATE 8-28-2001
GRAND STRAND WATER AND SEWER AUTHORITY

HOBBS, UPCHURCH AND ASSOCIATES, P.A. — CERTIFICATE OF AUTHORIZATION No. C00238

SOUTH CAROLINA REGISTERED PROFESSIONAL ENGINEER — JOSEPH W. McGOUGAN — No. 12335

HOBBS, UPCHURCH & ASSOCIATES, P.A.
CONSULTING ENGINEERS
MYRTLE BEACH, SOUTH CAROLINA 29577

AS-083-001/53

THESE DRAWINGS REFLECT
AS-BUILT
CONDITIONS

REVIEWED BY: _____
INSPECTIONS DATE

REVIEWED BY: _____
ENGINEERING DATE

GRAND STRAND WATER AND SEWER AUTHORITY

SECTION/DETAIL LEGEND

DETAIL CALL-OUT AND DETAIL TITLE IDENTIFICATION SYMBOL

- DETAIL IDENTIFICATION LETTER (IN SAME STRUCTURE)
- SHEET NUMBER (IN SAME DISCIPLINE) WHERE DETAIL IS DRAWN.
- SHEET NUMBER ON WHICH DETAIL CONDITION OCCURS. (DASH INDICATES CONDITION OCCURS ON MULTIPLE SHEETS.)

SECTION CUT SYMBOL (w/ARROW) OR TITLE IDENTIFICATION SYMBOL (w/o ARROW)

- SECTION IDENTIFICATION NUMBER
- SHEET NUMBER (IN SAME STRUCTURE) WHERE SECTION IS DRAWN.
- SHEET NUMBER (IN SAME STRUCTURE) ON WHICH SECTION IS INITIALLY CUT.

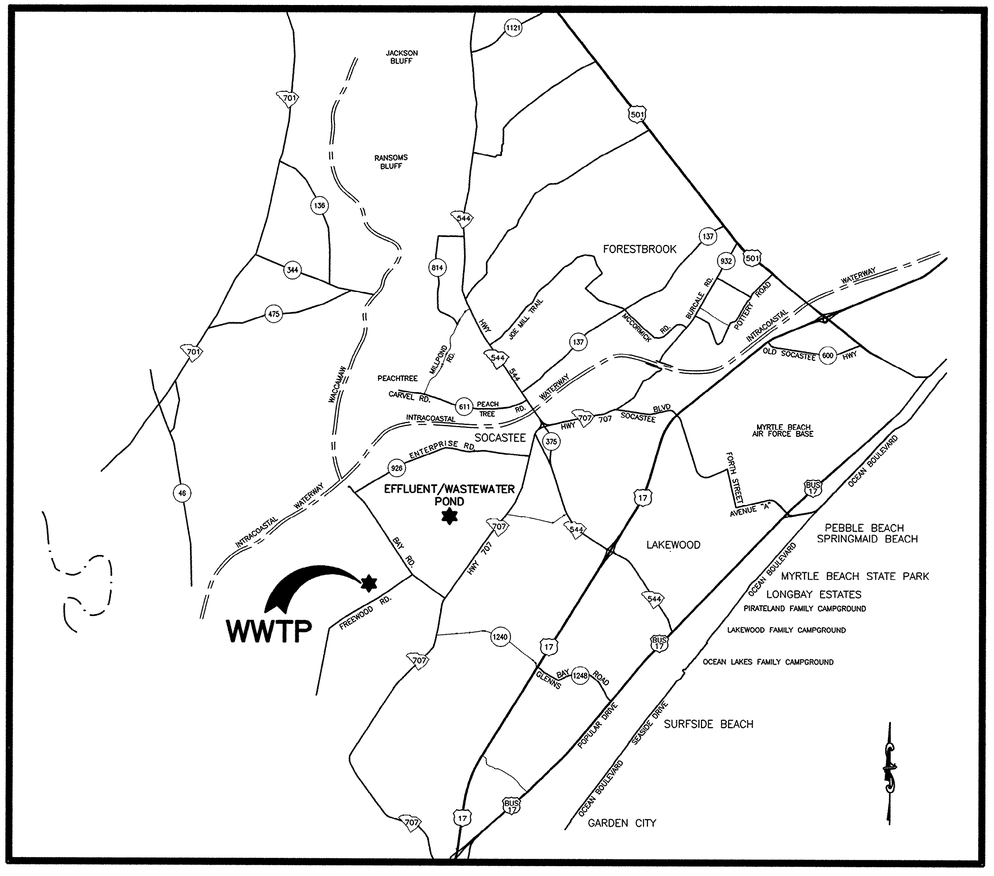

VICINITY MAP
N.T.S.

GENERAL CONSTRUCTION ABBREVIATIONS

#	NUMBER OR POUND	D	DIAMETER	INFL	INFLUENT	R.C.P.	REINFORCED CONCRETE PIPE
ϕ	DIAMETER	DIA	DIAMETER	INS.	INSIDE	RAD.	RADIUS
&	AND	D.I.P.	DUCTILE IRON PIPE	INV.	INVERT	RAS	RETURN ACTIVATED SLUDGE
<	LESS THAN	DISCH.	DISCHARGE	JT.	JOINT	RED	REDUCER
>=	LESS THAN OR EQUAL TO	DP	DEEP	JTS	JOINTS	REF	REFERENCE
≥	GREATER THAN	DWLS.	DOWELS	L.L.O.	LONG LEG OUT	REINF	REINFORCING OR REINFORCED
@	AT	E.F.	EACH FACE	LB	POUND	REQ'D	REQUIRED
A.B.	ANCHOR BOLT	E.J.	EXPANSION JOINT	LG	LONG	S.S.	STAINLESS STEEL
A.F.F.	ABOVE FINISHED FLOOR	EA	EACH	L.P.	LOW POINT	SCH.	SCHEDULE
ADDL	ADDITIONAL	EFF.	EFFLUENT	M.J.	MECHANICAL JOINT	SHT	SHEET
ALUM	ALUMINUM OR ALUM	EL	ELEVATION	MATL.	MATERIAL	SIM	SIMILAR
APPROX	APPROXIMATE(LY)	ELEV	ELEVATION	MAS	MASONRY	SO2	SULFUR DIOXIDE
ARCH	ARCHITECTURAL	EQ	EQUAL	MAX	MAXIMUM	SPA	SPACES
BM	BENCH MARK OR BEAM	EQUIP	EQUIPMENT	MECH	MECHANICAL	SQ.	SQUARE
BOTT.	BOTTOM	EXIST.	EXISTING	MFR	MANUFACTURER	STD.	STANDARD
B.W.	BLOCK WALL	EXP.	EXPANSION	MH	MANHOLE	STL	STEEL
C.I.	CAST IRON	F.E.S.	FLARED END SECTION	MIN	MINIMUM	STN	STAINLESS
C/C	CENTER TO CENTER	F.R.P.	FIBERGLASS REINFORCED PLASTIC	MNTG	MOUNTING	S.W.	SLAB WIDTH
CAP	CAPACITY			N.P.W.	NONPOTABLE WATER	S.W.D.	SIDE WALL DEPTH
CIRCUM	CIRCUMFERENCE	FIG	FIGURE	N.T.S.	NOT TO SCALE	T/	TOP OF
CL	CLAY	FIN	FINISHED	NO.	NUMBER	TCJ,CJ	TYP. CONTROL JOINT, CONSTRUCTION JOINT
CLR	CLEARANCE	FL.	FLANGE	O.C.	ON CENTER	THRD	THREAD(S,XED)
℄	CENTERLINE	FLR	FLOOR	O/O	OUTSIDE TO OUTSIDE	TRICK	TRICKLING
CL2	CHLORINE	FTG	FOOTING	OPNG	OPENING	TYP	TYPICAL
CLARIF	CLARIFIER	GALV	GALVANIZED	OX	OXIDATION	U.O.N.	UNLESS OTHERWISE NOTED
CHEM.	CHEMICAL	HDWE	HARDWARE	P.E.	PLAIN END	VERT	VERTICAL
COL	COLUMN	HK	HOOK	PED	PEDESTAL	W.W.F.	WELDED WIRE FABRIC
CONC.	CONCRETE	HORIZ.	HORIZONTAL	PL	PLATE	W/	WITH
CONST	CONSTRUCTION	H.P.	HIGH POINT	PLCS.	PLACES	W/O	WITHOUT
CONT	CONTINUOUS	HYD	HYDRANT	PROJ	PROJECTION	WAS	WASTE ACTIVATED SLUDGE
CONTR	CONTRACTOR	I.D.	INSIDE DIAMETER	P.S.	PUMP STATION	W/L	WATER LEVEL
CU	COPPER	O.D.	OUTSIDE DIAMETER	P.V.C.	POLYVINYLCHLORIDE		
C.W.	CONCRETE WALL						

INDEX OF SHEETS

45-003-002/53

REVISIONS

SYM.	DESCRIPTION	DATE	BY
	EFFLUENT POND ADDED	9/13/99	JWM
	AS-BUILT	8/27/01	CAR

SOUTH CAROLINA PROFESSIONAL ENGINEER No. 12335 REGISTERED JOSEPH W. McCORMAN

HOBBS, UPCHURCH & ASSOCIATES, P.A.
CONSULTING ENGINEERS
MYRTLE BEACH, SOUTH CAROLINA 29577

VICINITY MAP AND INDEX

TIP-TOP TREE FARM EFFLUENT LAND APPLICATION PROJECT
GRAND STRAND WATER AND SEWER AUTHORITY

DATE:	MAR. 1999
DESIGNED:	JWM
DRAWN:	DC
CHECKED:	JWM
SCALE:	AS SHOWN

SHEET NO. G-2
OF: 16

THESE DRAWINGS REFLECT
AS-BUILT
CONDITIONS

REVIEWED BY: _____ INSPECTIONS DATE

REVIEWED BY: _____ ENGINEERING DATE

GRAND STRAND WATER AND SEWER AUTHORITY

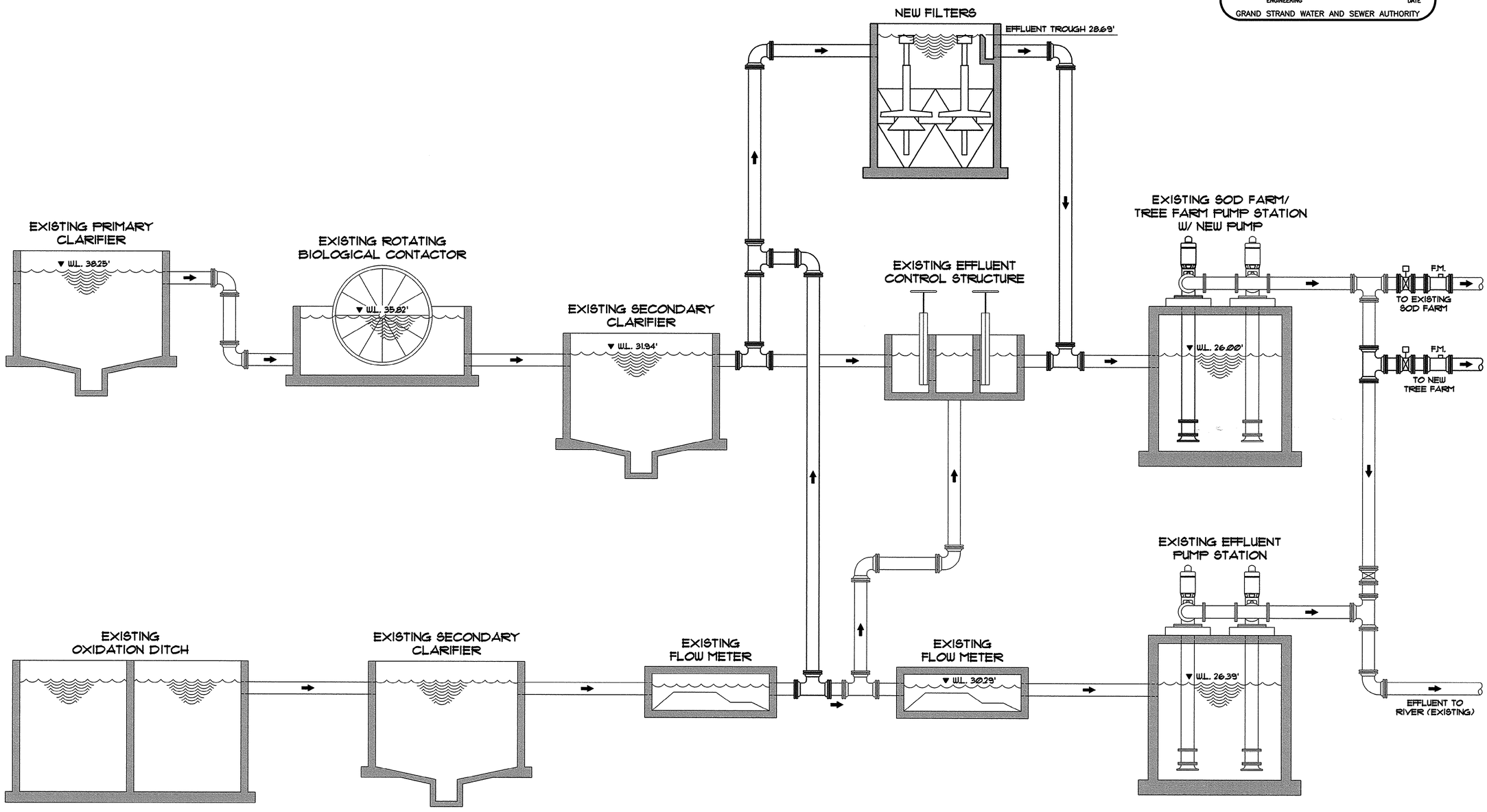

HYDRAULIC PROFILE

N.T.S.

45-003-003/53

SYM.	DESCRIPTION	DATE	BY
	AS-BUILT	8/28/01	CAR

REVISIONS

SOUTH CAROLINA PROFESSIONAL ENGINEER No. 12335 REGISTERED JOSEPH W. MCCULLOUGH

HOBBS, UPCHURCH & ASSOCIATES, P.A.
CONSULTING ENGINEERS
MYRTLE BEACH, SOUTH CAROLINA 29577

HYDRAULIC PROFILE

TIP-TOP TREE FARM EFFLUENT LAND APPLICATION PROJECT
GRAND STRAND WATER AND SEWER AUTHORITY

DATE:	MAR. 1999
DESIGNED:	JWM
DRAWN:	DC
CHECKED:	JWM
SCALE:	AS SHOWN

SHEET NO. G-3 OF: 16

HOBBS, UPCHURCH & ASSOC. MB J:\GS9901\900\820\G-DWGS\MB-G-03.dwg EDITED BY: ARABON DATE: 08/28/01 TIME: 14:30 Layout: Model

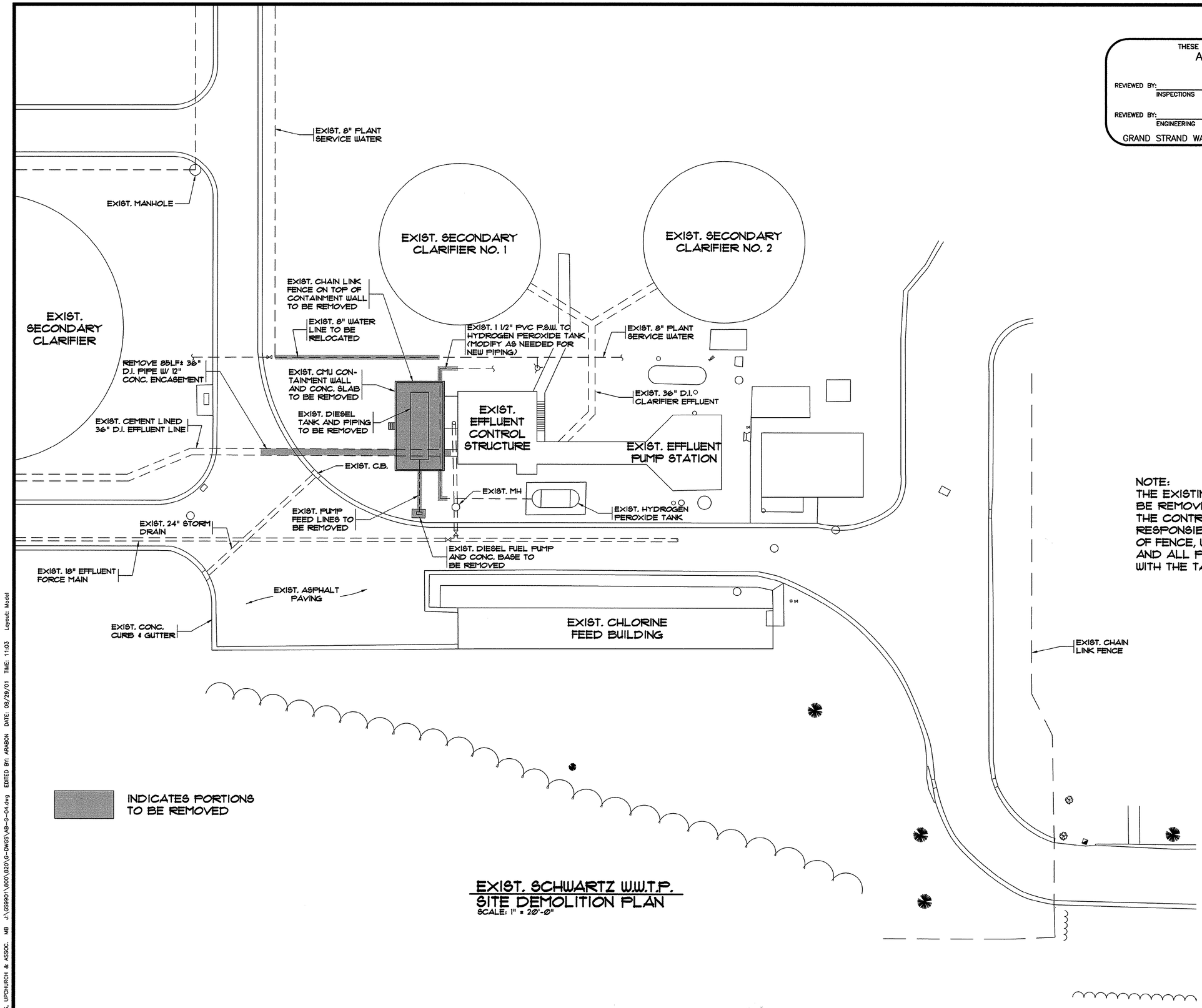

EXIST. SCHWARTZ W.W.T.P.
SITE DEMOLITION PLAN
SCALE: 1" = 20'-0"

THESE DRAWINGS REFLECT
AS-BUILT
CONDITIONS

REVIEWED BY: _____
INSPECTIONS DATE

REVIEWED BY: _____
ENGINEERING DATE

GRAND STRAND WATER AND SEWER AUTHORITY

NOTE:
THE EXISTING FUEL TANK WILL BE REMOVED BY GSW&SA. THE CONTRACTOR SHALL BE RESPONSIBLE FOR REMOVAL OF FENCE, WALLS, FOUNDATION AND ALL PIPING ASSOCIATED WITH THE TANK.

REVISIONS			
STM.	DESCRIPTION	DATE	BY
	AS-BUILT	8/28/01	CAR

SOUTH CAROLINA PROFESSIONAL ENGINEER REGISTERED No. 12339 JOSEPH W. MCCOLGAN

HOBBS, UPCHURCH & ASSOCIATES, P.A.
CONSULTING ENGINEERS
MYRTLE BEACH, SOUTH CAROLINA 29577

SITE DEMOLITION PLAN

TIP-TOP TREE FARM EFFLUENT LAND APPLICATION PROJECT
GRAND STRAND WATER AND SEWER AUTHORITY

DATE:	MAR. 1999
DESIGNED:	JWM
DRAWN:	DC
CHECKED:	JWM
SCALE:	AS SHOWN

SHEET NO. G-4 OF: 16

45-003-004/53

HOBBS, UPCHURCH & ASSOC. MB J:\GS9901\600\820\G-DWGS\AB-G-04.dwg EDITED BY: ARABON DATE: 08/29/01 TIME: 11:03 Layout: Model

NOTE:
CONTRACT NO. 1 SHALL END @ THE 30" 90° BEND LOCATED WEST OF THE EXIST. CHLORINE FEED BUILDING. THE 30" 90° BEND SHALL BE UNDER CONTRACT NO. 2. (SEE SHEET EFF-2 FOR DETAILS)

THESE DRAWINGS REFLECT
AS-BUILT
CONDITIONS

REVIEWED BY: _____ INSPECTIONS DATE

REVIEWED BY: _____ ENGINEERING DATE

GRAND STRAND WATER AND SEWER AUTHORITY

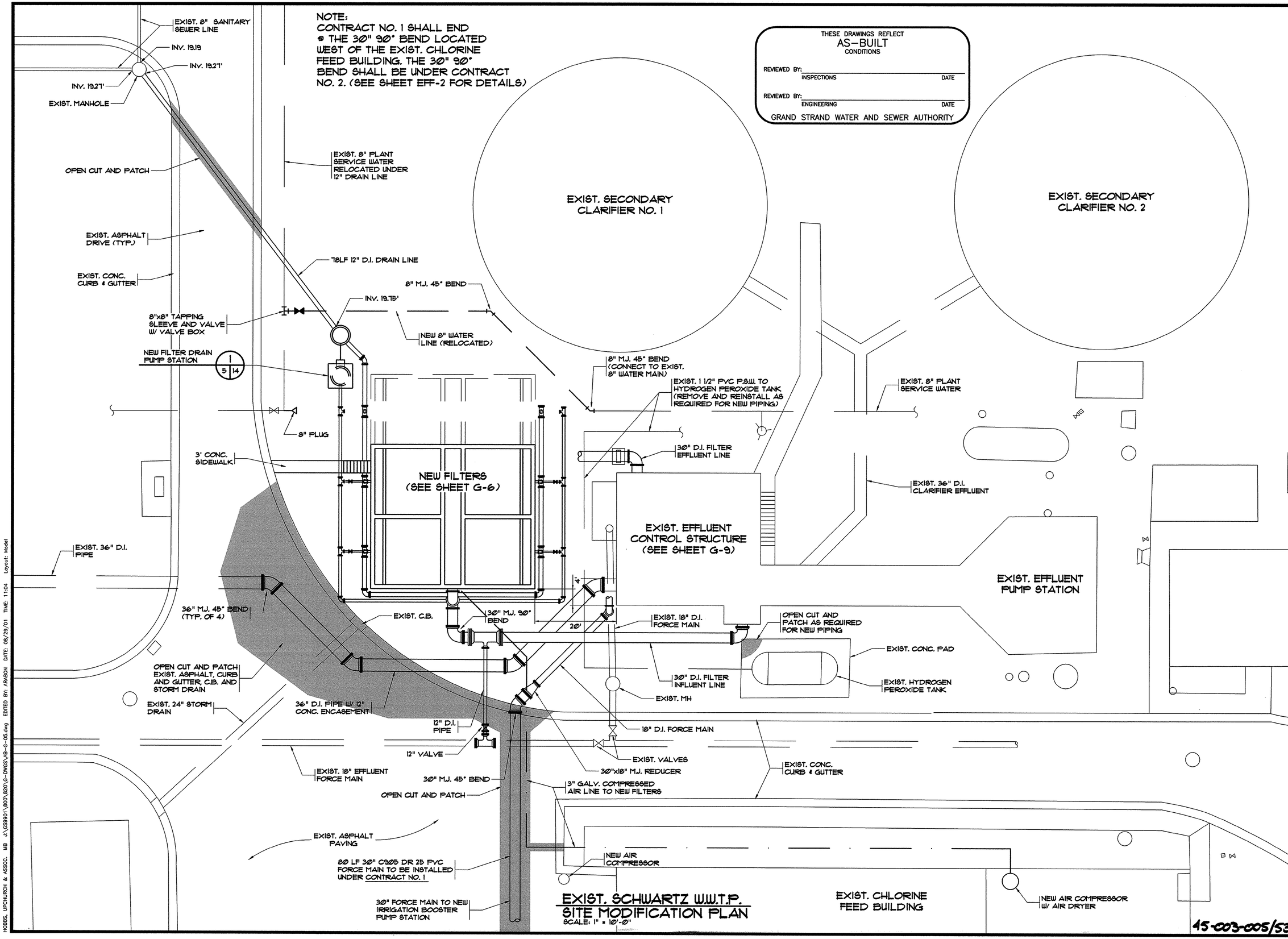

EXIST. SCHWARTZ W.W.T.P.
SITE MODIFICATION PLAN
SCALE: 1" = 10'-0"

REVISIONS

SYM.	DESCRIPTION	DATE	BY
	NOTES ADDED	9/13/99	JWM
	AS-BUILT	8/02/01	CAR

SOUTH CAROLINA PROFESSIONAL ENGINEER No. 12335 REGISTERED JOSEPH W. MCDONOUGH

HOBBS, UPCHURCH & ASSOCIATES, P.A.
CONSULTING ENGINEERS
MYRTLE BEACH, SOUTH CAROLINA 29577

SITE MODIFICATION PLAN

TIP-TOP TREE FARM EFFLUENT LAND APPLICATION PROJECT
GRAND STRAND WATER AND SEWER AUTHORITY

DATE:	MAR. 1999
DESIGNED:	JWM
DRAWN:	DC
CHECKED:	JWM
SCALE:	AS SHOWN

SHEET NO. G-5 OF: 16

45-003-005/53

HOBBS, UPCHURCH & ASSOC. MB J:\GS3901\800\820\G-DWGS\AB-G-05.dwg EDITED BY: ARABON DATE: 08/29/01 TIME: 11:04 Layout: Model

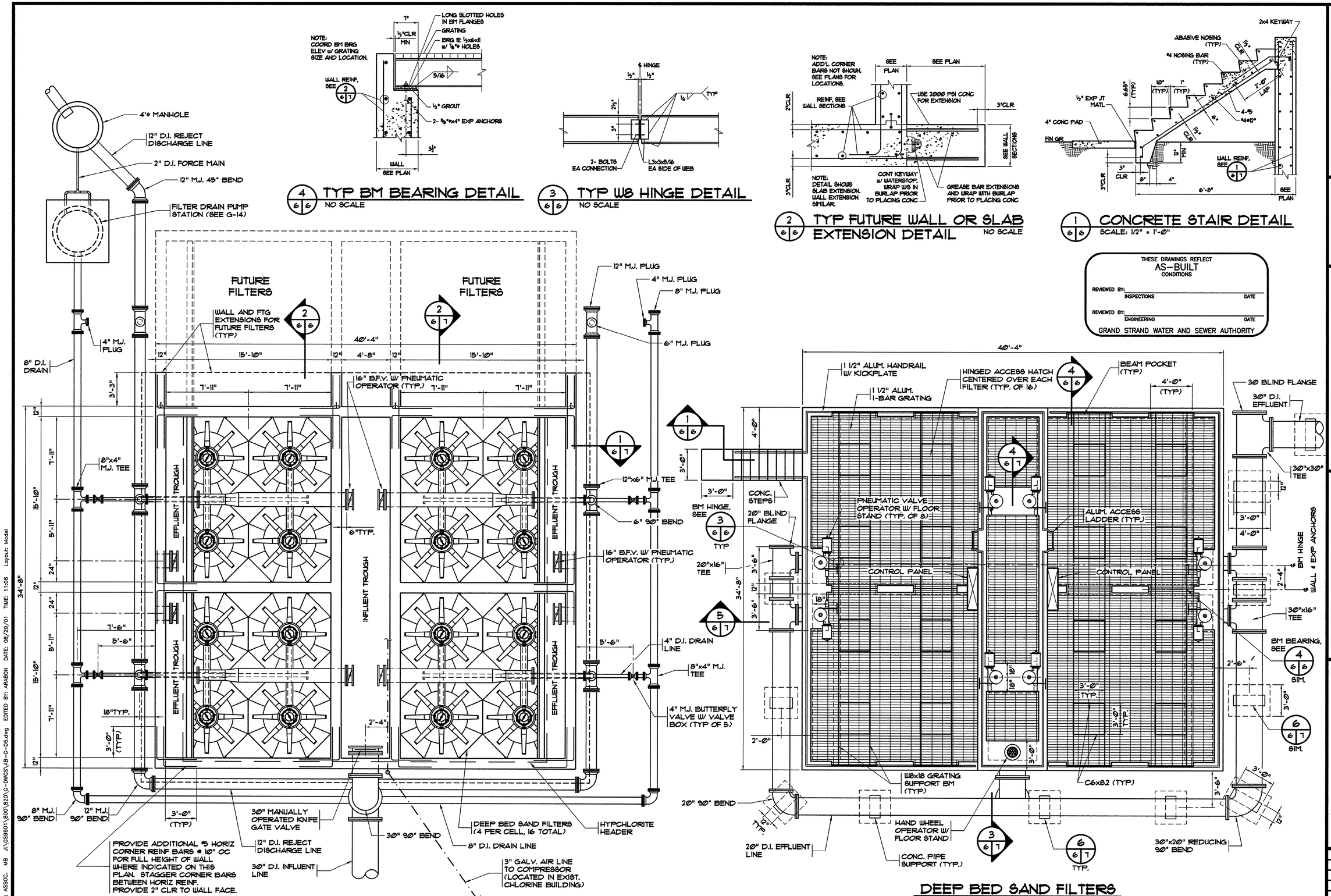

SYM.	DESCRIPTION	DATE	BY
	30" VALVE CHANGES	9/13/99	JWM
	PIPE SUPPORTS ADDED	9/13/99	JWM
	AS-BUILT	8/02/01	CAR

REVISIONS

SOUTH CAROLINA REGISTERED PROFESSIONAL ENGINEER No. 12335 JESSE W. HUTCHISON

HOBBS, UPCHURCH & ASSOCIATES, P.A.
CONSULTING ENGINEERS
MYRTLE BEACH, SOUTH CAROLINA 29577

DEEP BED SAND FILTERS PLAN VIEWS

TIP-TOP TREE FARM EFFLUENT LAND APPLICATION PROJECT
GRAND STRAND WATER AND SEWER AUTHORITY

DATE:	MAR. 1999
DESIGNED:	JWM
DRAWN:	DC
CHECKED:	JWM
SCALE:	AS SHOWN

SHEET NO. G-6 OF: 16

45-C03-006/53

HOBBS, UPCHURCH & ASSOC. MB J:\CS9901\800\820\G-DWGS\AB-G-06.dwg EDITED BY: APABON DATE: 08/29/01 TIME: 11:06 Layout: Model

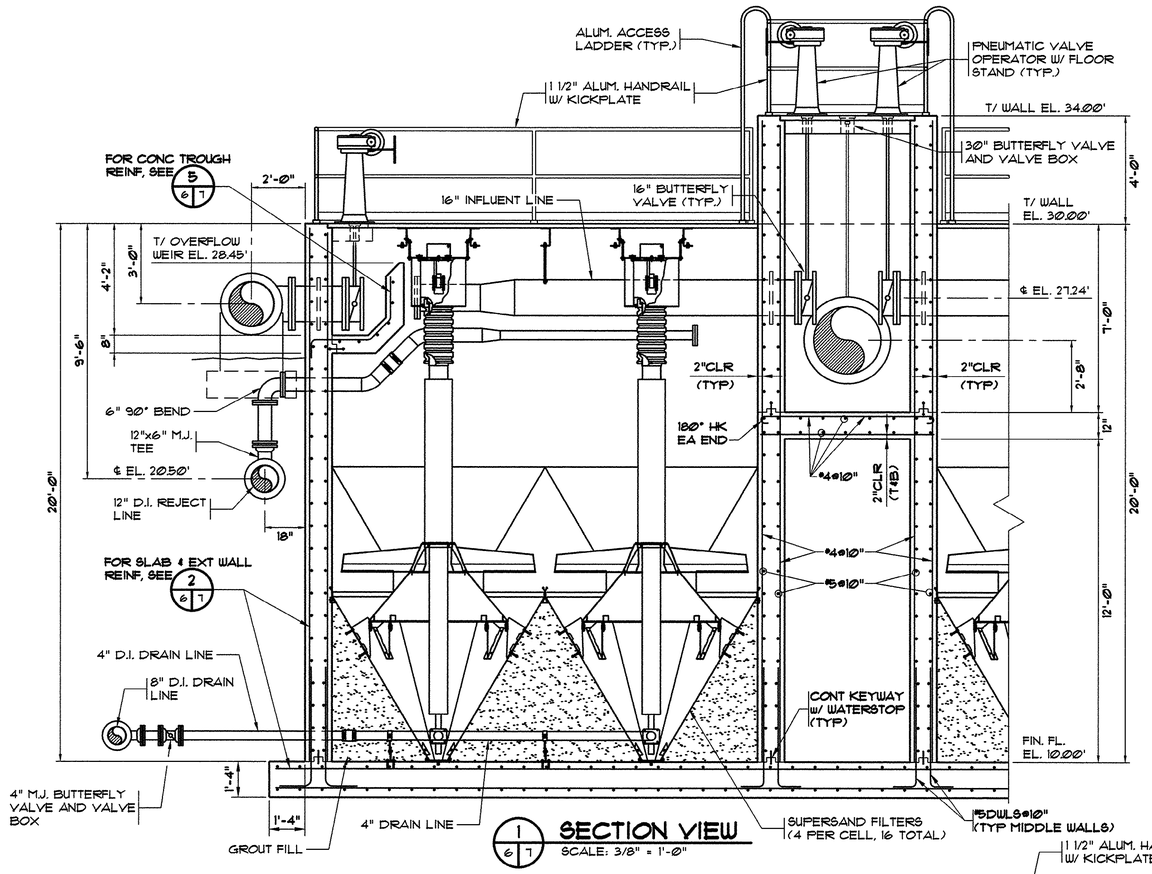

1 6|7 SECTION VIEW
SCALE: 3/8" = 1'-0"

THESE DRAWINGS REFLECT
AS-BUILT
CONDITIONS

REVIEWED BY: _____ INSPECTIONS DATE
REVIEWED BY: _____ ENGINEERING DATE
GRAND STRAND WATER AND SEWER AUTHORITY

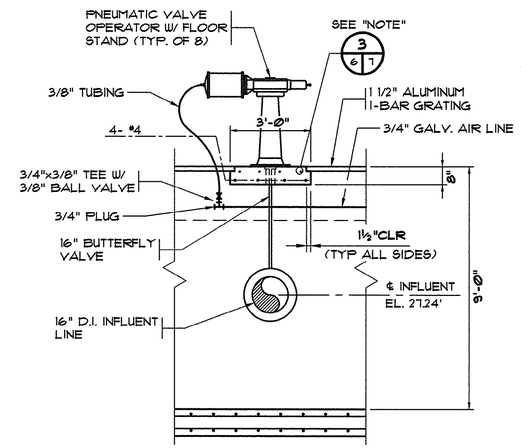

4 6|7 SECTION VIEW
SCALE: 3/8" = 1'-0"

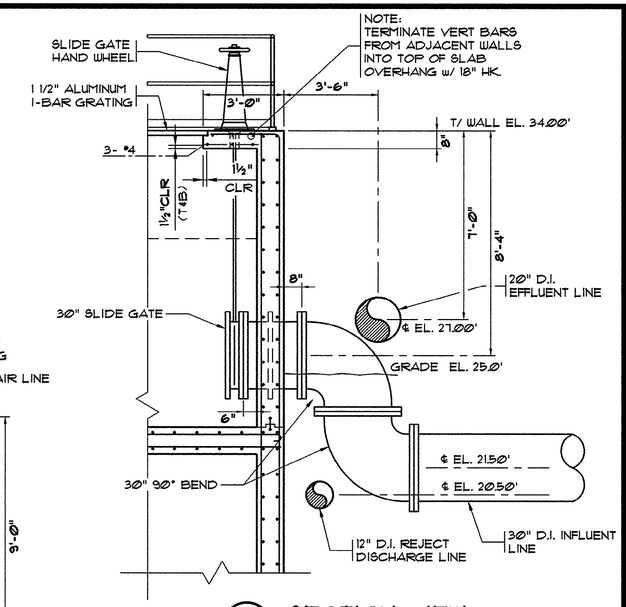

3 6|7 SECTION VIEW
SCALE: 3/8" = 1'-0"

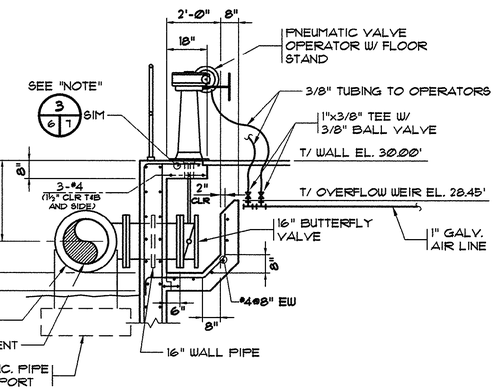

5 6|7 SECTION VIEW
SCALE: 3/8" = 1'-0"

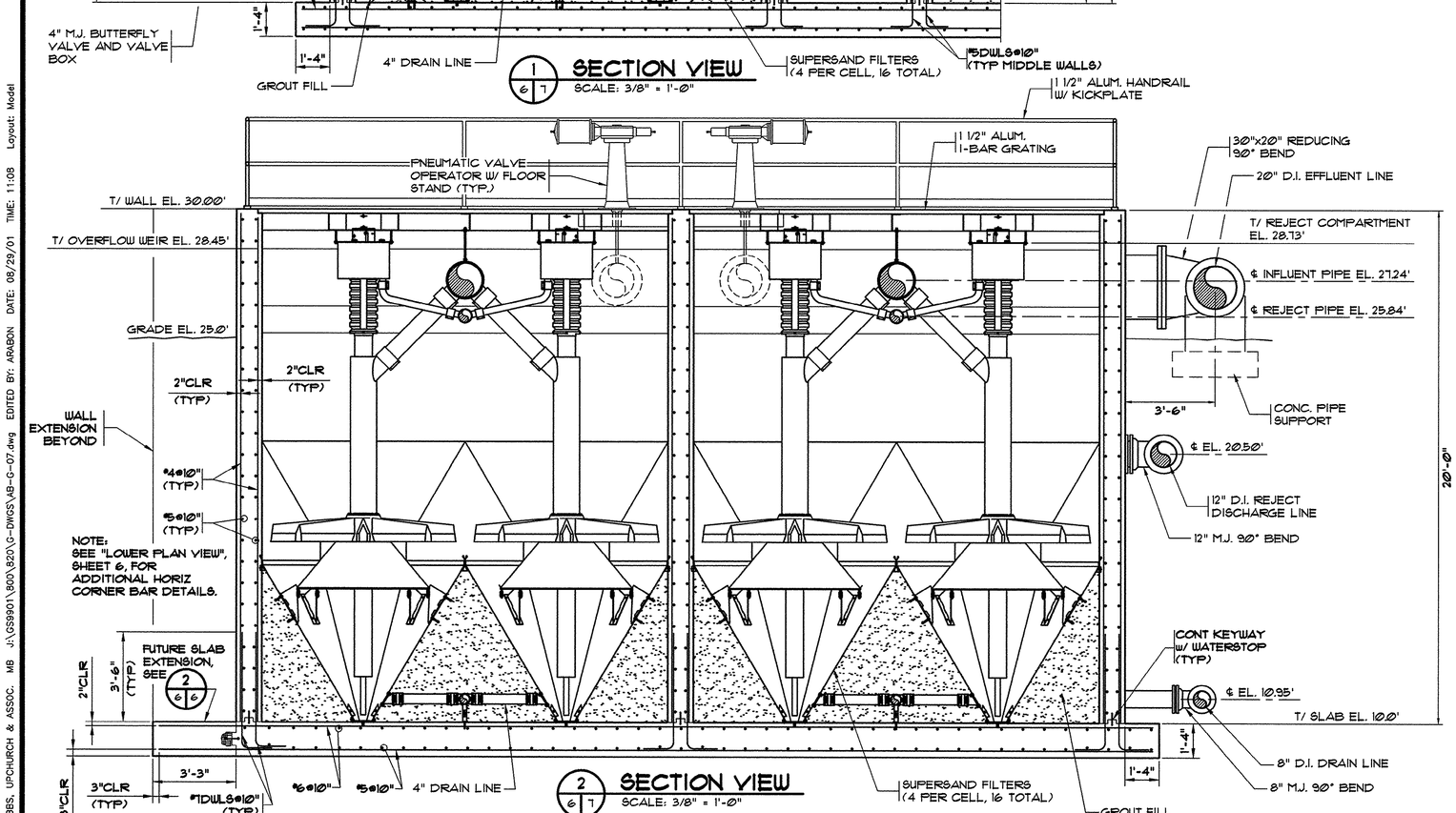

2 6|7 SECTION VIEW
SCALE: 3/8" = 1'-0"

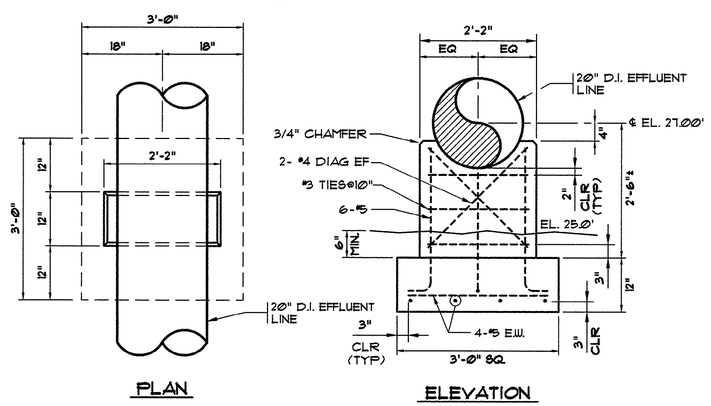

6 6|7 PIPE SUPPORT DETAIL
SCALE: 3/4" = 1'-0"

45-003-007/63

REVISIONS			
SYM.	DESCRIPTION	DATE	BY
	30" VALVE CHANGES	9/13/99	JWM
	AS-BUILT	8/02/01	CAR

SOUTH CAROLINA PROFESSIONAL ENGINEER No. 12335 REGISTERED JOSEPH W. MCCHURCH

HOBBS, UPCHURCH & ASSOCIATES, P.A.
CONSULTING ENGINEERS
MYRTLE BEACH, SOUTH CAROLINA 29577

DEEP BED SAND FILTERS SECTIONS AND DETAILS

TIP-TOP TREE FARM EFFLUENT LAND APPLICATION PROJECT

GRAND STRAND WATER AND SEWER AUTHORITY

DATE:	MAR. 1999
DESIGNED:	JWM
DRAWN:	DC
CHECKED:	JWM
SCALE:	AS SHOWN

SHEET NO. G-7
OF: 16

HOBBS, UPCHURCH & ASSOC. MB J:\GS9901\800\820\G-DWGS\AB-G-07.dwg EDITED BY: ARABON DATE: 08/29/01 TIME: 11:08 Layout: Model

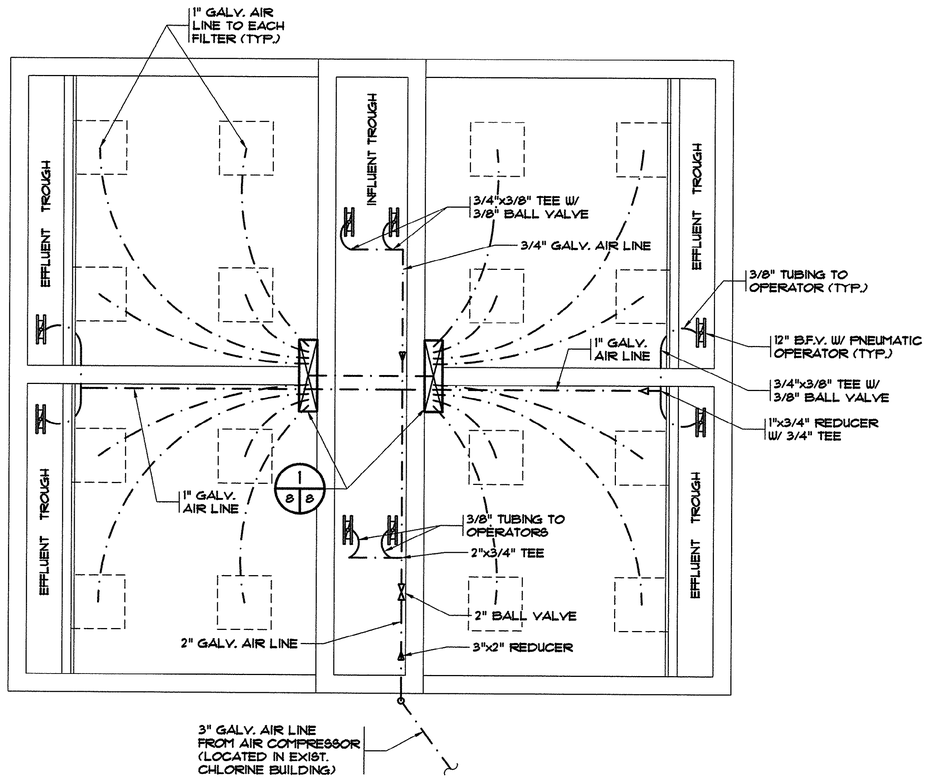

DEEP BED SAND FILTERS AIR LINE SCHEMATIC
N.T.S.

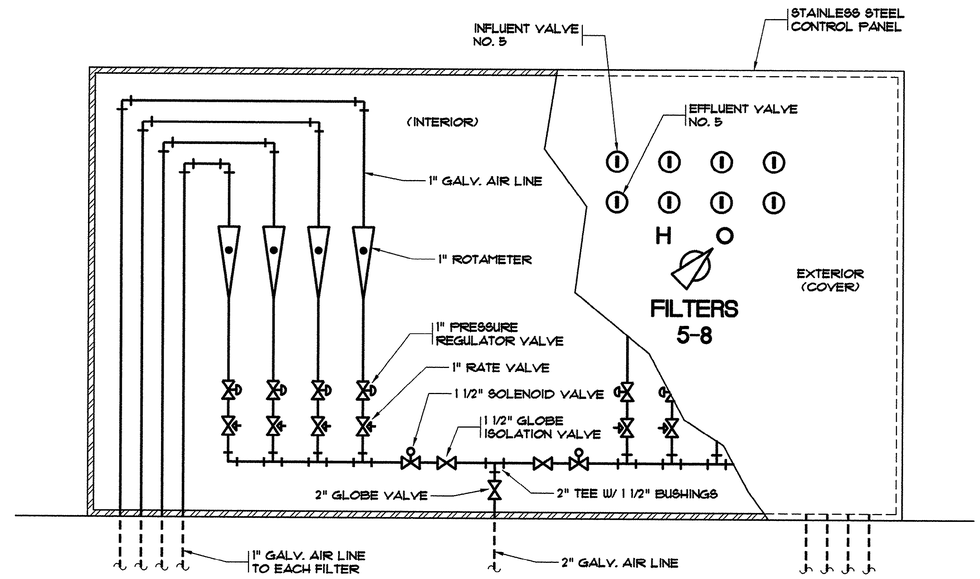

1/8 CONTROL PANEL FOR FILTERS 1-8 (SIMILAR FOR FILTERS 9-16)
N.T.S.

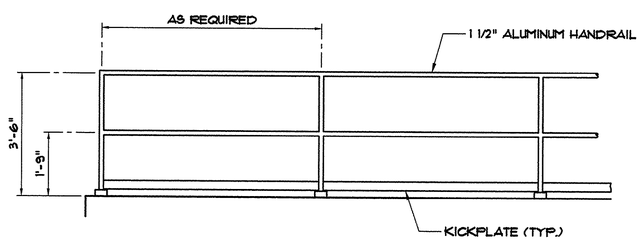

TYPICAL HANDRAIL DETAIL
N.T.S.

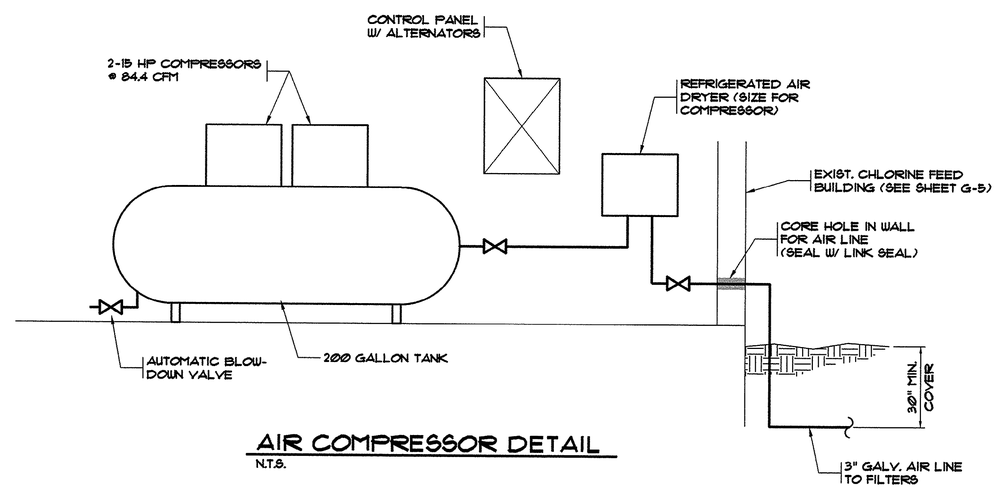

AIR COMPRESSOR DETAIL
N.T.S.

THESE DRAWINGS REFLECT
AS-BUILT
CONDITIONS

REVIEWED BY: _____ INSPECTIONS DATE

REVIEWED BY: _____ ENGINEERING DATE

GRAND STRAND WATER AND SEWER AUTHORITY

REVISIONS

SYM.	DESCRIPTION	DATE	BY
	AS-BUILT	8/02/01	CAR

SOUTH CAROLINA PROFESSIONAL ENGINEER REGISTERED No. 12335 JOSEPH W. MCCLUCHAN

HOBBS, UPCHURCH & ASSOCIATES, P.A.
CONSULTING ENGINEERS
MYRTLE BEACH, SOUTH CAROLINA 29577

DEEP BED SAND FILTERS AIR LINE SCHEMATIC AND CONTROL PANEL DETAILS

TIP-TOP TREE FARM EFFLUENT LAND APPLICATION PROJECT
GRAND STRAND WATER AND SEWER AUTHORITY

DATE:	MAR. 1999
DESIGNED:	JWM
DRAWN:	DC
CHECKED:	JWM
SCALE:	AS SHOWN

SHEET NO. G-8 OF: 16

AS-003-008/53

HOBBS, UPCHURCH & ASSOC. MB J:\GS9901\800\820\G-DWGS\AB-G-08.dwg EDITED BY: ARABON DATE: 08/29/01 TIME: 11:09 Layout: Model

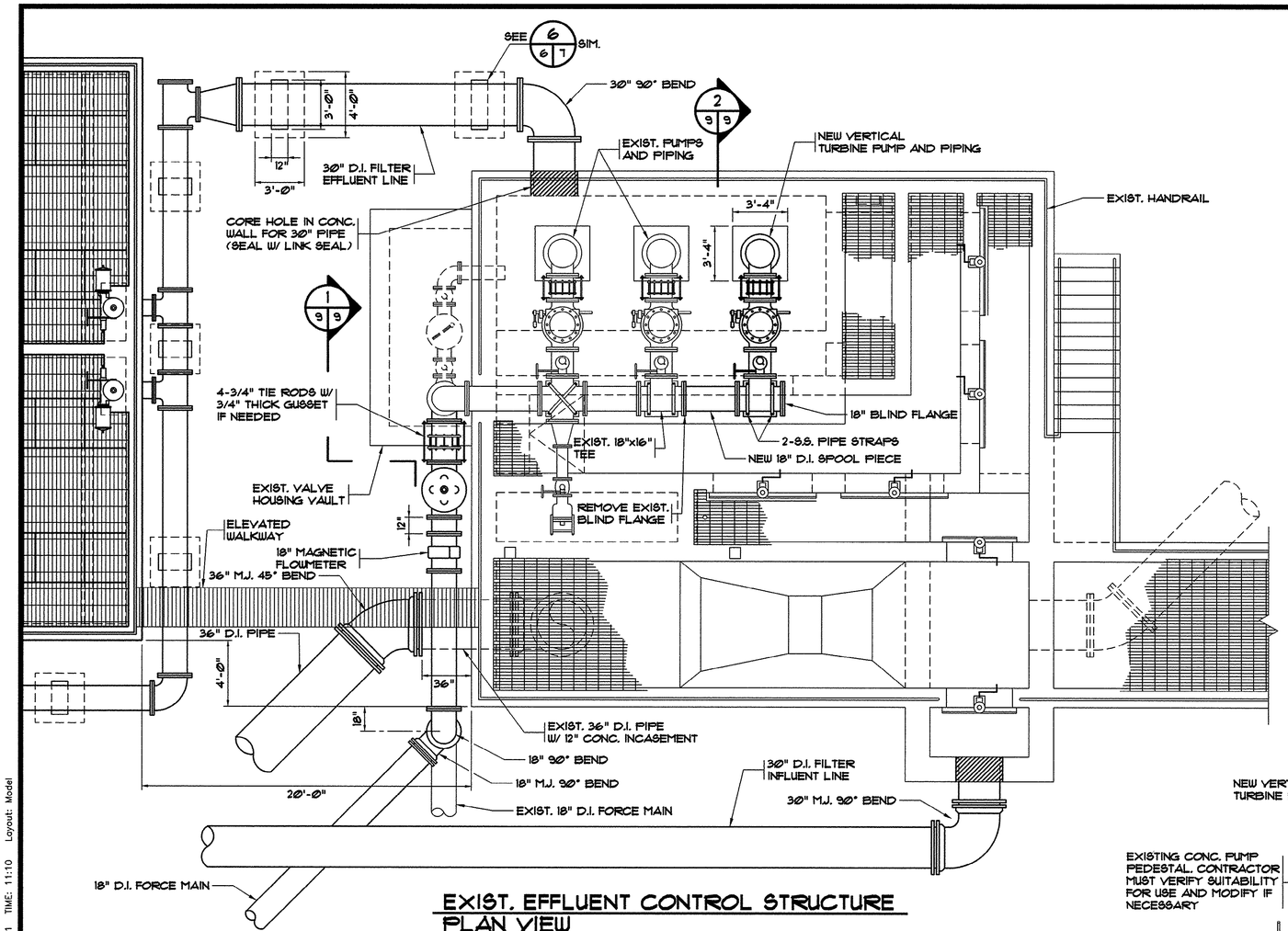

EXIST. EFFLUENT CONTROL STRUCTURE PLAN VIEW

SCALE: 1/4" = 1'-0"

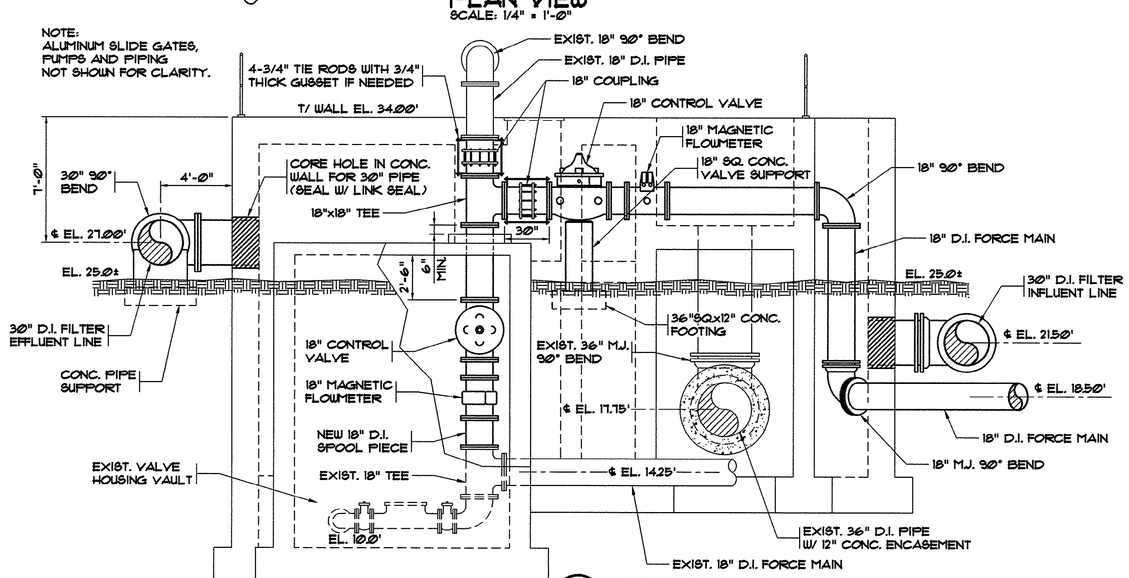

SECTION VIEW

1/9 9 SCALE: 1/4" = 1'-0"

THESE DRAWINGS REFLECT
AS-BUILT
CONDITIONS

REVIEWED BY: _____ INSPECTIONS DATE

REVIEWED BY: _____ ENGINEERING DATE

GRAND STRAND WATER AND SEWER AUTHORITY

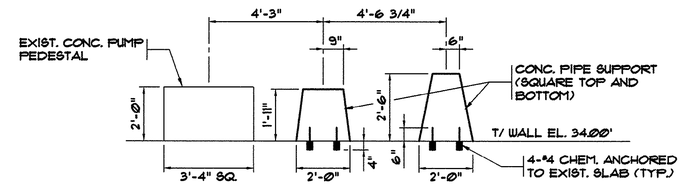

PIPE SUPPORT DETAIL

3/9 9 SCALE: 3/8" = 1'-0"

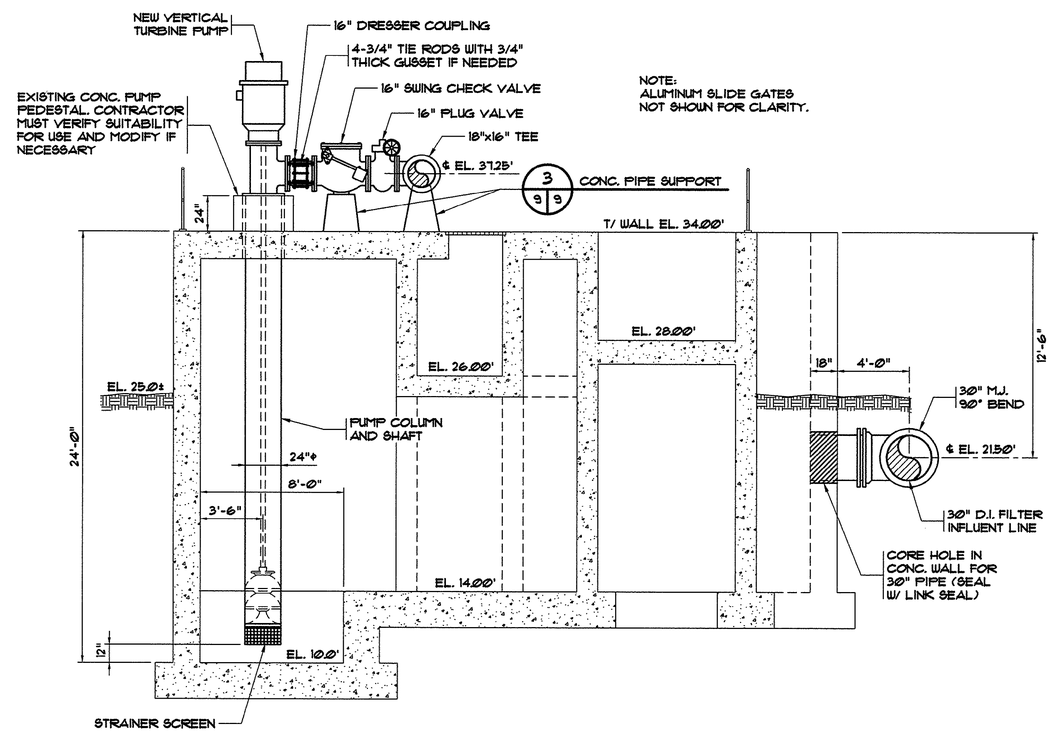

SECTION VIEW

2/9 9 SCALE: 1/4" = 1'-0"

45-003-009/53

REVISIONS			
STM.	DESCRIPTION	DATE	BY
	AS-BUILT	8/02/01	CAR

SOUTH CAROLINA PROFESSIONAL ENGINEER No. 12335 REGISTERED JOSEPH W. MCCLOSKEY

HOBBS, UPCHURCH & ASSOCIATES, P.A.
CONSULTING ENGINEERS
MYRTLE BEACH, SOUTH CAROLINA 29577

EXIST. EFFLUENT CONTROL STRUCTURE PUMP AND PIPING ADDITION AND DETAILS

TIP-TOP TREE FARM EFFLUENT LAND APPLICATION PROJECT

GRAND STRAND WATER AND SEWER AUTHORITY

DATE:	MAR. 1999
DESIGNED:	JWM
DRAWN:	DC
CHECKED:	JWM
SCALE:	AS SHOWN

SHEET NO. G-9 OF: 16

HOBBS, UPCHURCH & ASSOC. MB J:\GS9901\800\820\G-DWGS\AB-G-09.dwg EDITED BY: ARABON DATE: 08/29/01 TIME: 11:10 Layout: Model

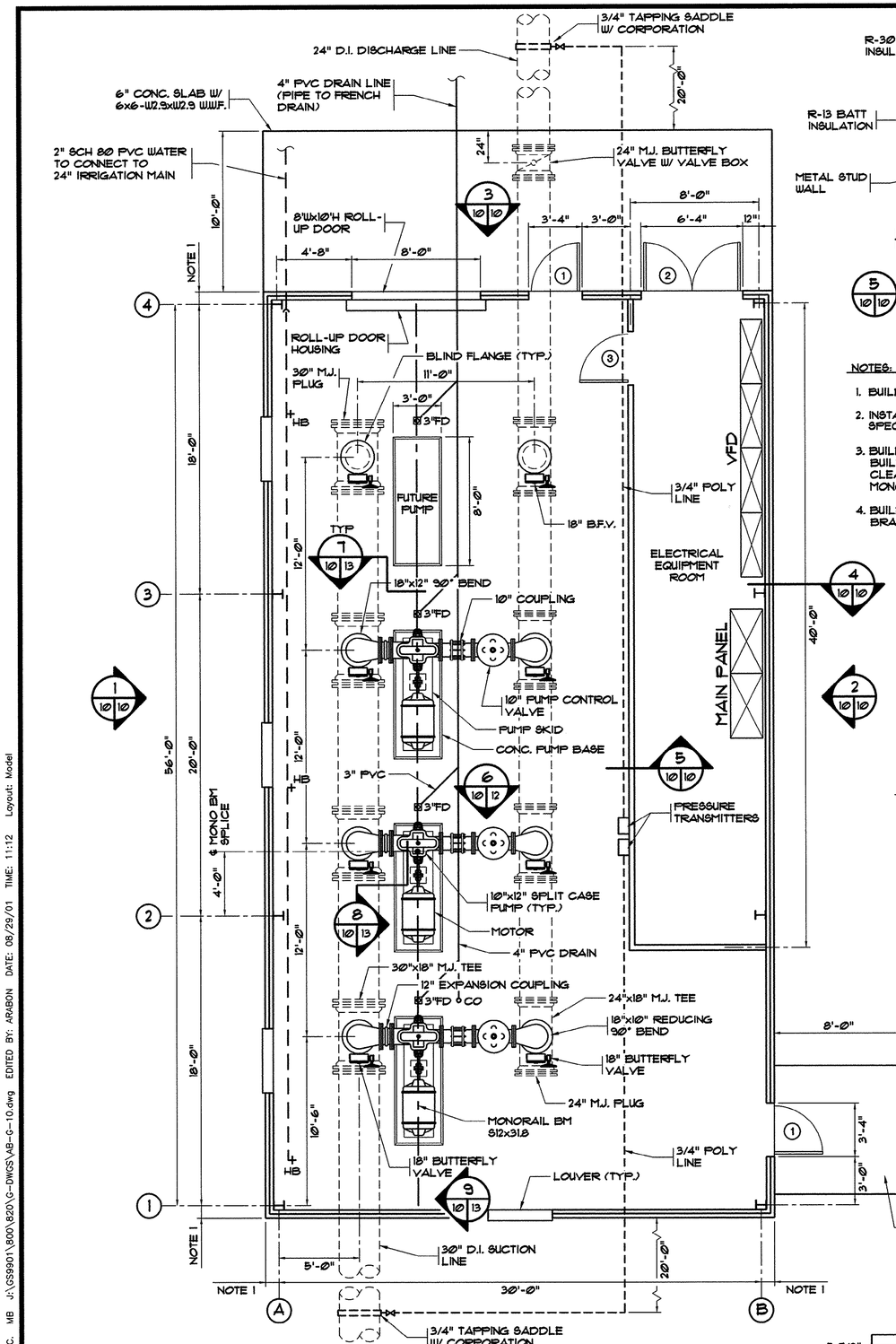

IRRIGATION BOOSTER PUMP STATION PLAN

1/4" = 1'-0"

NOTE:
1. OUTSIDE EDGE OF CONCRETE BUILDING SLAB SHALL CORRESPOND WITH BUILDING STRUCTURE LINE. (COORDINATE WITH BUILDING MANUFACTURER.)
2. MONORAIL HOIST CAPACITY = 2 TONS.

PLAN

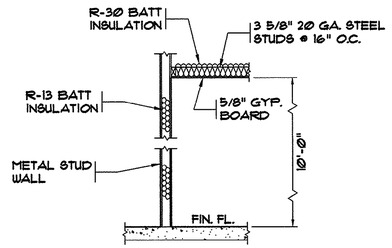

WALL SECTION

N.T.S.

NOTES:

1. BUILDING TO BE BUTLER PANL-LINE OR SIMILAR.
2. INSTALL BUILDING AS PER MANUFACTURE'S SPECIFICATIONS.
3. BUILDING MANUFACTURER SHALL COORDINATE BUILDING HEIGHT TO MAINTAIN MINIMUM 12'-0" CLEARANCE FROM FINISHED FLOOR TO BOTTOM OF MONORAIL BEAM.
4. BUILDING MANUFACTURER SHALL PROVIDE HORIZONTAL BRACING AS REQUIRED TO RESIST MONORAIL FORCES.

DOOR SCHEDULE

NO.	DOOR						FRAME			REMARKS
	SIZE	TYPE	MTL.	GLASS	LOUVER	LABEL	TYPE	MTL.	GLASS	
1	3'x7'x1.75"	A	INSUL. H.M.	1/4" TEMP.	NONE	NONE	1	METAL	NONE	
2	PR3'x7'x1.75"	A	INSUL. H.M.	1/4" TEMP.	NONE	NONE	1	METAL	NONE	
3	3'x7'x1.75"	B	INSUL. H.M.	NONE	NONE	NONE	1	METAL	NONE	

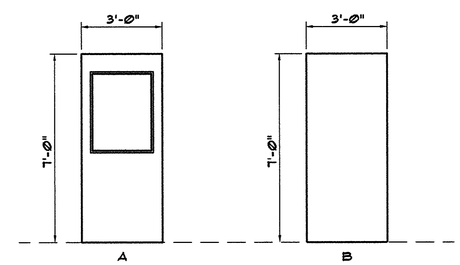

DOOR ELEVATIONS

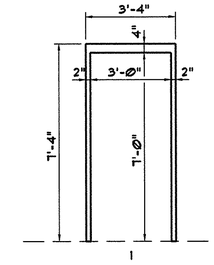

FRAME ELEVATIONS

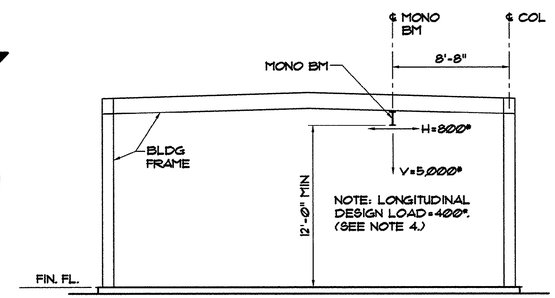

MONORAIL BM DESIGN LOADS

NO SCALE

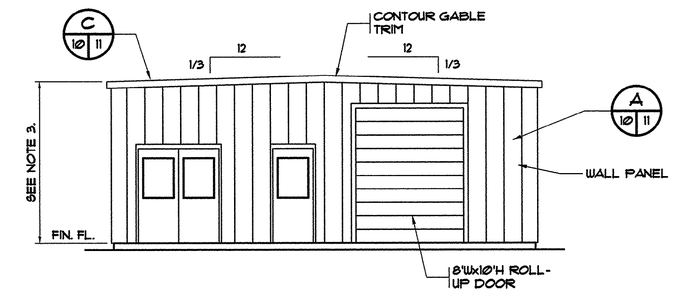

EXTERIOR ELEVATION

SCALE: 3/16" = 1'-0"

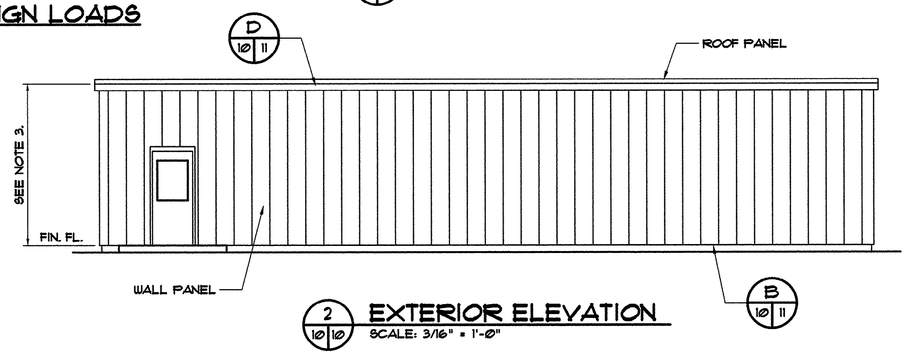

EXTERIOR ELEVATION

SCALE: 3/16" = 1'-0"

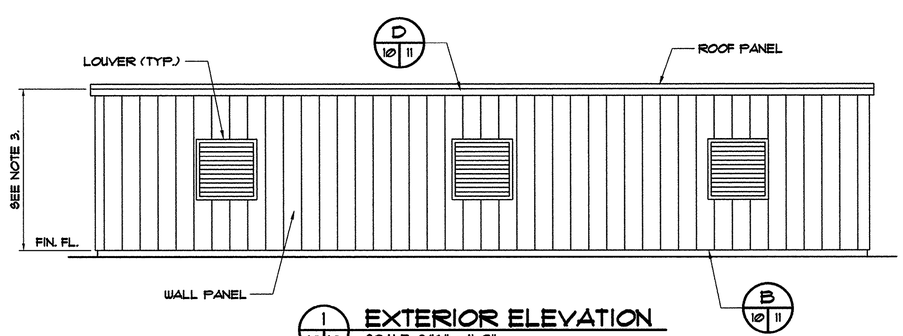

EXTERIOR ELEVATION

SCALE: 3/16" = 1'-0"

THESE DRAWINGS REFLECT
AS-BUILT
CONDITIONS

REVIEWED BY: _____ INSPECTIONS DATE

REVIEWED BY: _____ ENGINEERING DATE

GRAND STRAND WATER AND SEWER AUTHORITY

WALL LEGEND

5 7/8" — TYPICAL EXTERIOR WALL
EXTERIOR METAL WALL PANEL, 3" UNFACED INSULATION, 1 1/2" THICK FOAM BOARD, INSULATED LINER PANEL

4 7/8" — TYPICAL UNRATED WALL
1 LAYER 5/8" GYP. BOARD EACH SIDE 3 5/8" 20 GA. STEEL STUDS @ 16" O.C. VERTICAL, FIBERGLASS BATT INSULATION. (EXTEND WALL UP TO BOTTOM OF METAL ROOF DECK)

45-003-010/53

REVISIONS

SYM.	DESCRIPTION	DATE	BY
	AS-BUILT	8/02/01	CAR

SOUTH CAROLINA REGISTERED PROFESSIONAL ENGINEER No. 12335 JOSEPH W. MCCLOUGHAN

HOBBS, UPCHURCH & ASSOCIATES, P.A.
CONSULTING ENGINEERS
MYRTLE BEACH, SOUTH CAROLINA 29577

IRRIGATION BOOSTER PUMP STATION PLAN/ EXTERIOR ELEVATIONS AND DETAILS

TIP-TOP TREE FARM EFFLUENT LAND APPLICATION PROJECT

GRAND STRAND WATER AND SEWER AUTHORITY

DATE:	MAR. 1999
DESIGNED:	JWM
DRAWN:	DC
CHECKED:	JWM
SCALE:	AS SHOWN
SHEET NO.	G-10
OF:	16

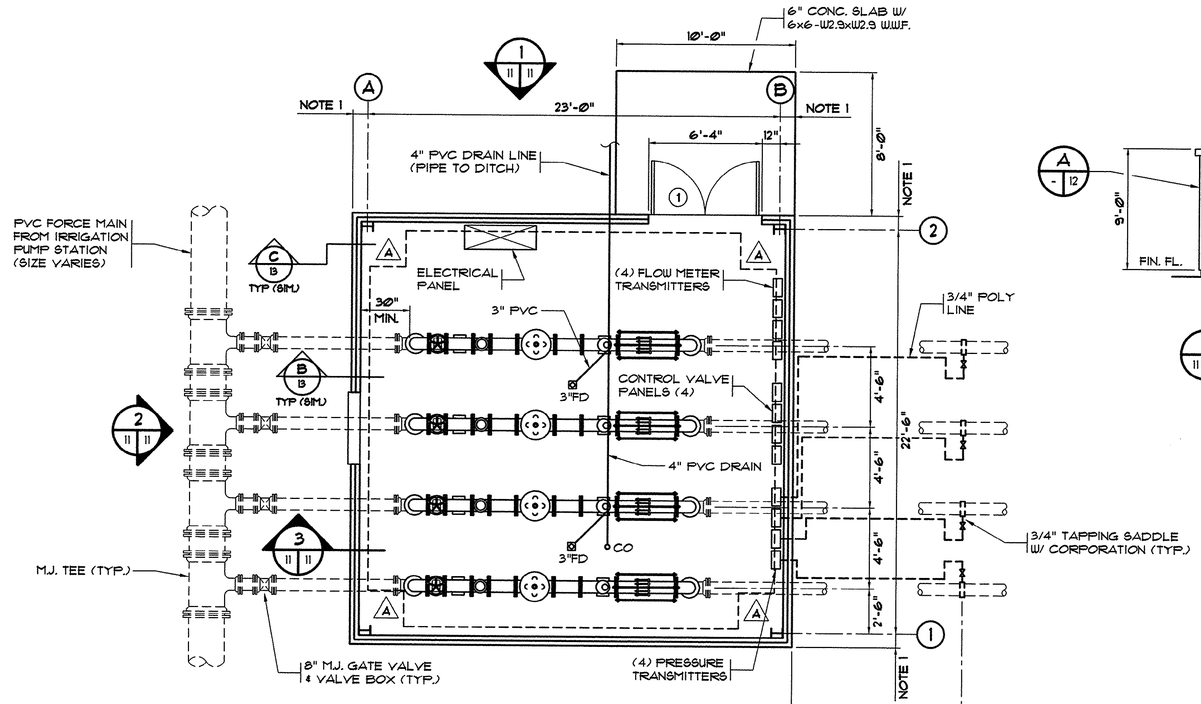

DISTRIBUTION HEADER LAYOUT BUILDING PLAN

SCALE: 1/4" = 1'-0"

NOTES:

1. OUTSIDE EDGE OF CONCRETE BUILDING SLAB SHALL CORRESPOND WITH BUILDING STRUCTURE LINE. (COORDINATE WITH BUILDING MANUFACTURER.)
2. SEE SITE PLAN FOR TOP OF SLAB ELEVATIONS.
3. ALL SLABS SHALL BE 6" THICKNESS, UON.
4. ALL SLABS SHALL BE PLACED OVER VAPOR BARRIER AND 4" COMPACTED STONE AND REINFORCED WITH 6x6-W2.9xW2.9 W.W.F, UON.

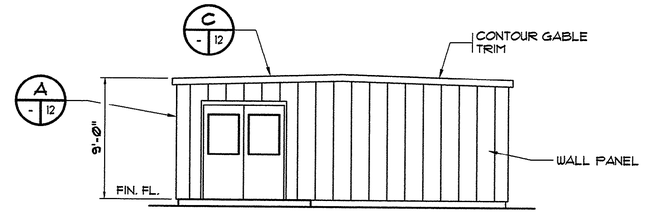

EXTERIOR ELEVATION

SCALE: 3/16" = 1'-0"

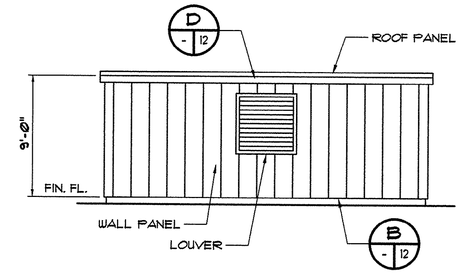

EXTERIOR ELEVATION

SCALE: 3/16" = 1'-0"

COLUMN FOOTING SCHEDULE			
MARK	SIZE	DEPTH	REINF EA WAY
A	3'-0"x3'-0"	24"	4-#5

THESE DRAWINGS REFLECT
AS-BUILT
CONDITIONS

REVIEWED BY: _____
INSPECTIONS DATE

REVIEWED BY: _____
ENGINEERING DATE

GRAND STRAND WATER AND SEWER AUTHORITY

WALL LEGEND

5 7/8" — TYPICAL EXTERIOR WALL
EXTERIOR METAL WALL PANEL,
3" UNFACED INSULATION, 1 1/2" THICK
FOAM BOARD, INSULATED LINER PANEL

NOTE:
PROVIDE MOUNTING FRAME WORK FOR ELECTRICAL AND INSTRUMENTATION PANELS.

NOTES:

1. BUILDING TO BE BUTLER PANL-LINE OR SIMILAR.
2. INSTALL BUILDING AS PER MANUFACTURE'S SPECIFICATIONS.

NOTE:
SEE G-13 FOR FOUNDATION DETAILS. (SIMILAR)

DOOR SCHEDULE

NO.	DOOR						FRAME			REMARKS
	SIZE	TYPE	MTL.	GLASS	LOUVER	LABEL	TYPE	MTL.	GLASS	
1	PR3'x7'x1.75"	A	INSUL. H.M.	1/4" TEMP.	NONE	NONE	1	METAL	NONE	

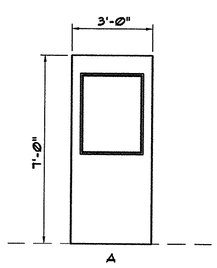

DOOR ELEVATIONS

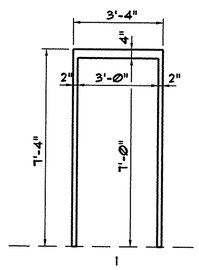

FRAME ELEVATIONS

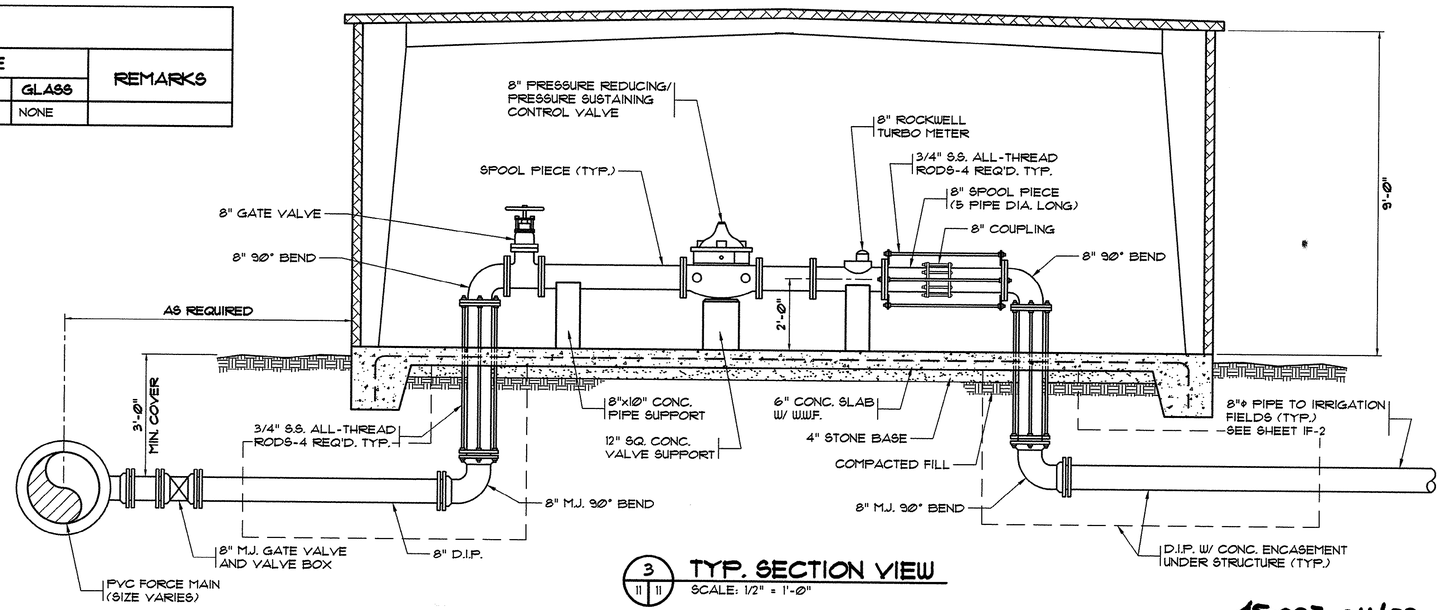

TYP. SECTION VIEW

SCALE: 1/2" = 1'-0"

45-003-011/53

REVISIONS			
SYM.	DESCRIPTION	DATE	BY
	AS-BUILT	8/02/01	CAR

SOUTH CAROLINA PROFESSIONAL ENGINEER REGISTERED No. 12335 JOHN M. MCDOWAN

HOBBS, UPCHURCH & ASSOCIATES, P.A.
CONSULTING ENGINEERS
MYRTLE BEACH, SOUTH CAROLINA 29577

IRRIGATION FIELDS DISTRIBUTION HEADER DETAILS AND BUILDING LAYOUT

TIP-TOP TREE FARM EFFLUENT LAND APPLICATION PROJECT
GRAND STRAND WATER AND SEWER AUTHORITY

DATE:	MAR. 1999
DESIGNED:	JWM
DRAWN:	DC
CHECKED:	JWM
SCALE:	AS SHOWN

SHEET NO. G-11
OF: 16

HOBBS, UPCHURCH & ASSOC. MB J:\GS9901\800\820\G-DWGS\AB-G-11.dwg EDITED BY: ABABON DATE: 08/29/01 TIME: 11:14 Layout: Model

THESE DRAWINGS REFLECT
AS-BUILT
CONDITIONS

REVIEWED BY: _____ INSPECTIONS DATE

REVIEWED BY: _____ ENGINEERING DATE

GRAND STRAND WATER AND SEWER AUTHORITY

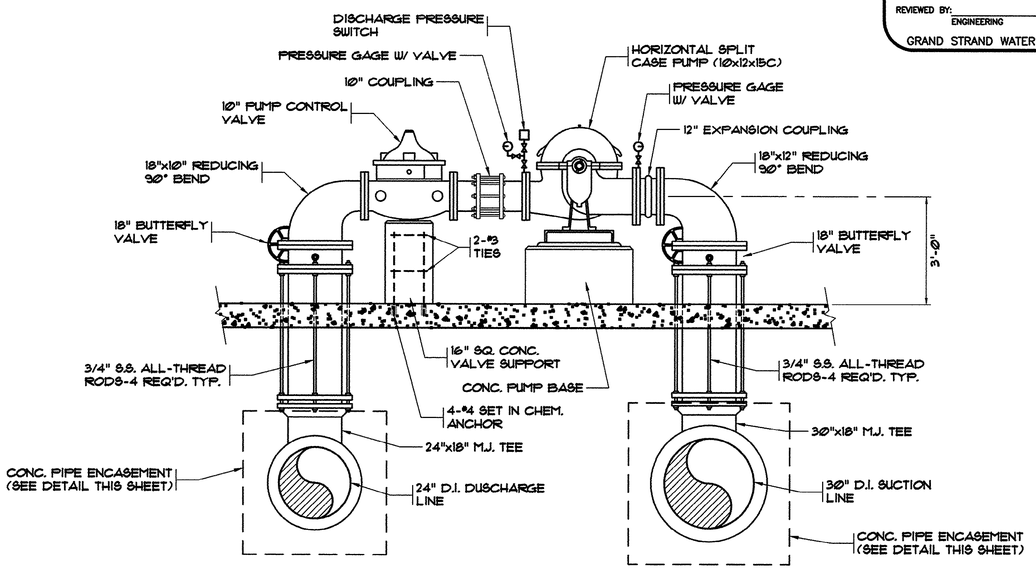

6 / 10 12 PUMP ELEVATION VIEW
SCALE: 1/2" = 1'-0"

NOTE: ENCASE PIPES UNDER ALL STRUCTURES 5'± BEYOND OUTSIDE OF BUILDING.

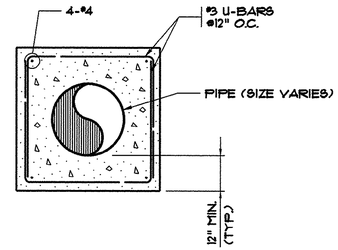

TYPICAL PIPE ENCASEMENT DETAIL
SCALE: 3/4" = 1'-0"

PURLIN SPACING			
BLDG.	'A'	BLDG.	'A'
12'	2'-10 1/2"	24'	3'-11"
16'	3'-10 1/2"	28'	4'-7"
20'	4'-10 1/2"	32'	3'-11 1/4"

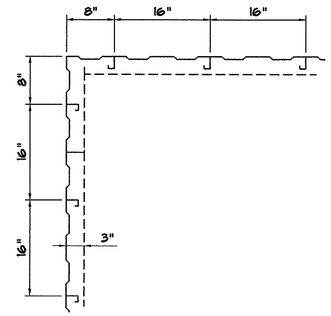

A / - 12 CORNER DETAIL
SCALE: 1/4"=1'-0"

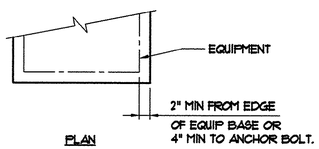

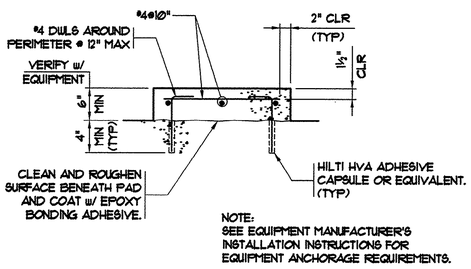

TYP. EQUIPMENT PAD DETAIL
NO SCALE

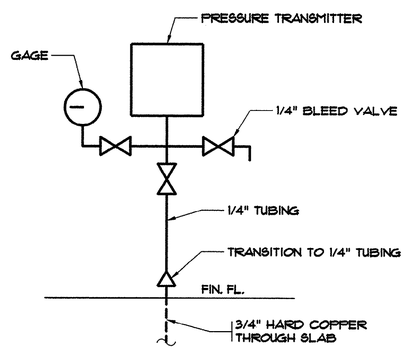

PRESSURE TRANSMITTER SCHEMATIC
N.T.S.

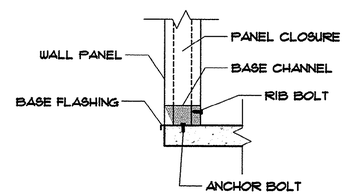

B / - 12 BASE DETAIL
N.T.S.

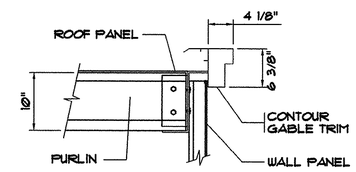

C / - 12 SECTION AT ENDWALL
SCALE: 1/4"=1'-0"

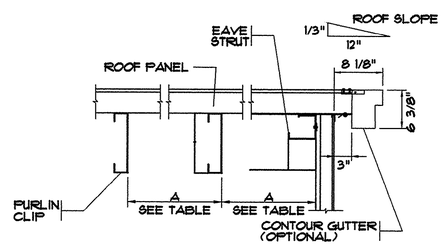

D / - 12 SECTION AT EAVE
SCALE: 1/4"=1'-0"

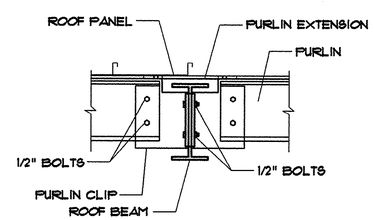

PURLIN TO FRAME DETAIL
SCALE: 1/4"=1'-0"

45-003-012/53

SYM.	DESCRIPTION	DATE	BY
	AS-BUILT	8/02/01	CAR

REVISIONS

SOUTH CAROLINA PROFESSIONAL ENGINEER REGISTERED No. 12335 WILLIAM H. HOBBS, JR.

HOBBS, UPCHURCH & ASSOCIATES, P.A.
CONSULTING ENGINEERS
MYRTLE BEACH, SOUTH CAROLINA 29577

IRRIGATION BOOSTER PUMP STATION PUMP ELEVATION AND BUILDING DETAILS

TIP-TOP TREE FARM EFFLUENT LAND APPLICATION PROJECT
GRAND STRAND WATER AND SEWER AUTHORITY

DATE:	MAR. 1999
DESIGNED:	JWM
DRAWN:	DC
CHECKED:	JWM
SCALE:	AS SHOWN

SHEET NO. G-12 OF: 16

HOBBS, UPCHURCH & ASSOC. MB J:\GS9901\600\820\G-DWGS\AB-G-12.dwg EDITED BY: ARABON DATE: 08/29/01 TIME: 11:15 Layout: Model

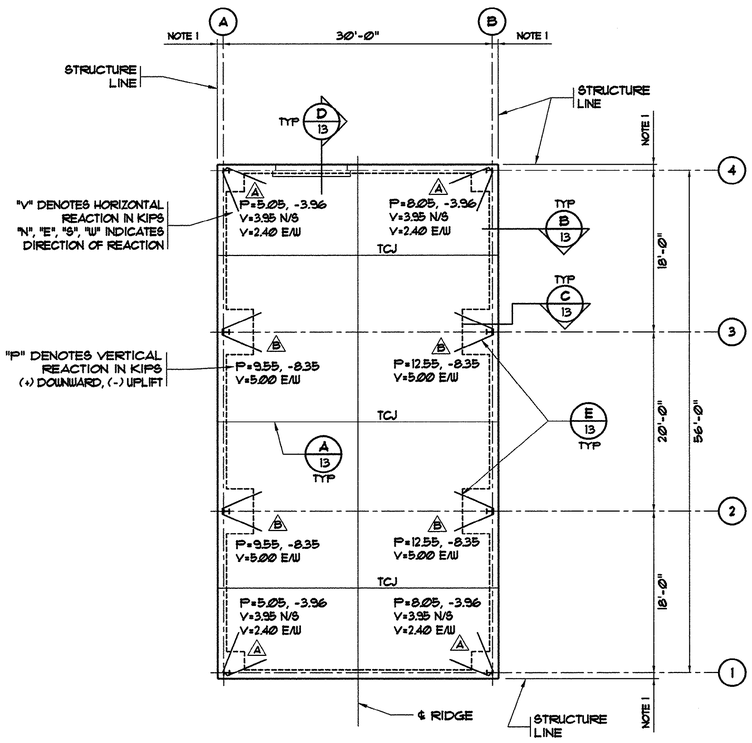

N PLAN

FOUNDATION PLAN

1/8"=1'-0"

NOTE:
1. OUTSIDE EDGE OF CONCRETE BUILDING SLAB SHALL CORRESPOND WITH BUILDING STRUCTURE LINE. (COORDINATE WITH BUILDING MANUFACTURER.)
2. SEE SITE PLAN FOR TOP OF SLAB ELEVATIONS.
3. ALL SLABS SHALL BE 6" THICKNESS, U.O.N.
4. ALL SLABS SHALL BE PLACED OVER VAPOR BARRIER AND 4" COMPACTED STONE AND REINFORCED WITH 6x6-W2.9xW2.9 W.W.F. U.O.N.
5. VERTICAL REACTIONS SHOWN INCLUDE MAX REACTIONS DUE TO MONORAIL LOADS.

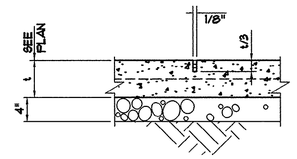

NOTE:
1. SAWED JOINTS SHALL BE MADE WITHIN 12 HOURS AFTER PLACING CONCRETE.
2. WHERE SAWED JOINT WILL BE LEFT PERMANENTLY EXPOSED TO VIEW, FILL JOINT WITH FLEXIBLE JOINT SEALING COMPOUND.

A/13 TYP CONTROL JOINT "TCJ"
SLAB-ON-GRADE — NO SCALE

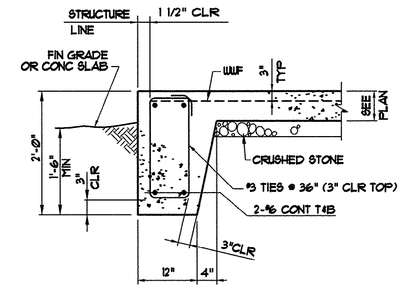

B/13 TYP SLAB EDGE REINF DETAIL
NO SCALE

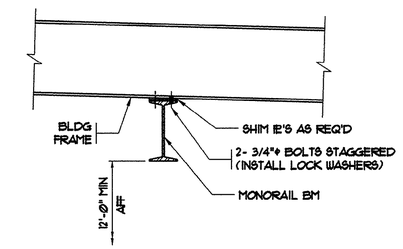

7/10|13 TYP MONORAIL BM CONN DETAIL
SCALE: 1"=1'-0"

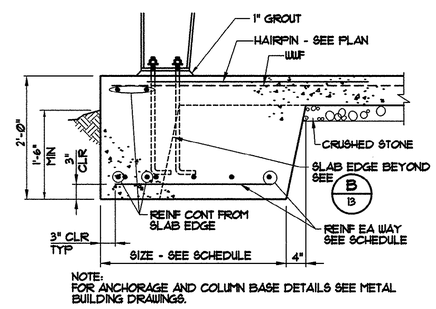

NOTE:
FOR ANCHORAGE AND COLUMN BASE DETAILS SEE METAL BUILDING DRAWINGS.

C/13 TYP SLAB EDGE FOOTING REINF DETAIL
NO SCALE

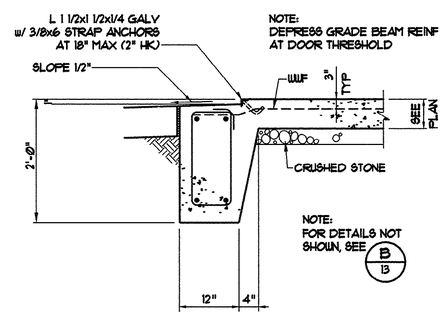

D/13 TYP SLAB EDGE AT OH DOOR
NO SCALE

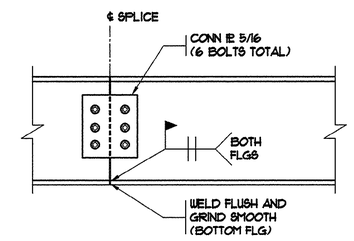

8/10|13 TYP MONORAIL BM SPLICE DETAIL
SCALE: 1½"=1'-0"

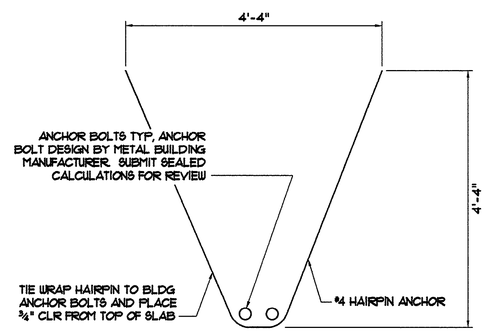

NOTE:
PROVIDE ADDITIONAL HAIRPIN ANCHORS AS REQUIRED BY ANCHOR BOLT DESIGN

E/13 TYP HAIRPIN ANCHOR DETAIL
NO SCALE

COLUMN FOOTING SCHEDULE			
MARK	SIZE	DEPTH	REINF. EA WAY
A	3'-0"x3'-0"	24"	4-#5
B	4'-0"x5'-0"	24"	6-#5 SW 5-#5 LW

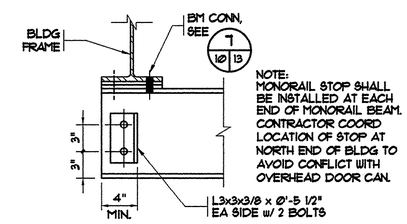

9/10|13 TYP MONORAIL STOP DETAIL
SCALE: 1½"=1'-0"

THESE DRAWINGS REFLECT
AS-BUILT
CONDITIONS

REVIEWED BY: _____ INSPECTIONS DATE
REVIEWED BY: _____ ENGINEERING DATE

GRAND STRAND WATER AND SEWER AUTHORITY

REVISIONS

SYM.	DESCRIPTION	DATE	BY
	AS-BUILT	8/02/01	CAR

SOUTH CAROLINA PROFESSIONAL ENGINEER No. 12335 REGISTERED JOSEPH W. MOSQUEDA

HOBBS, UPCHURCH & ASSOCIATES, P.A.
CONSULTING ENGINEERS
MYRTLE BEACH, SOUTH CAROLINA 29577

IRRIGATION BOOSTER PUMP STATION FOUNDATION PLAN AND DETAILS

TIP-TOP TREE FARM EFFLUENT LAND APPLICATION PROJECT
GRAND STRAND WATER AND SEWER AUTHORITY

DATE:	MAR. 1999
DESIGNED:	JWM
DRAWN:	DC
CHECKED:	JWM
SCALE:	AS SHOWN

SHEET NO. G-13
OF: 16

45-003-013/53

HOBBS, UPCHURCH & ASSOC. MB J:\GS9901\800\820\G-DWGS\MB-G-13.dwg EDITED BY: ARABON DATE: 08/29/01 TIME: 11:15 Layout: Model

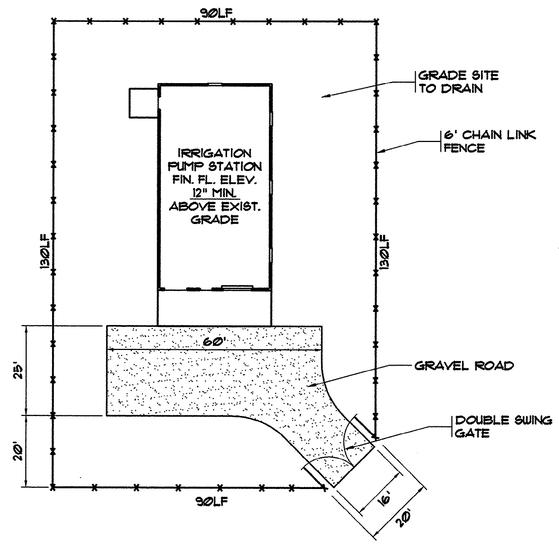

IRRIGATION PUMP STATION
SITE PLAN
N.T.S.

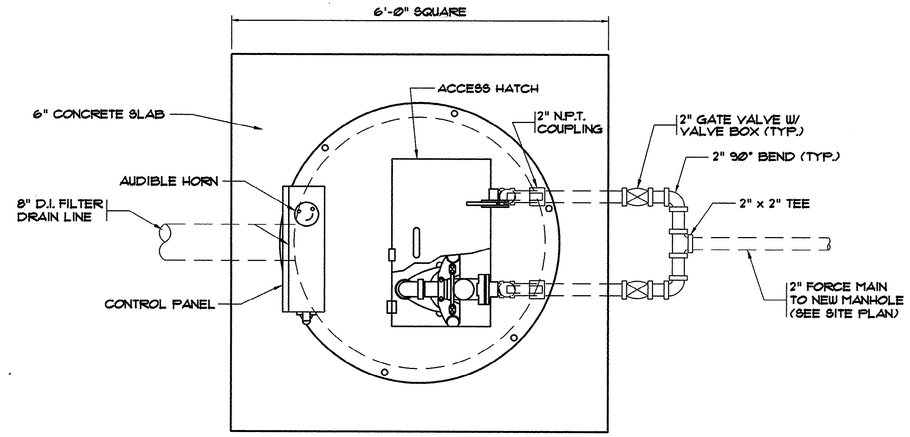

1/5|14 FILTER DRAIN PUMP STATION
TOP PLAN VIEW
N.T.S.

THESE DRAWINGS REFLECT
AS-BUILT
CONDITIONS

REVIEWED BY: _____ INSPECTIONS DATE

REVIEWED BY: _____ ENGINEERING DATE

GRAND STRAND WATER AND SEWER AUTHORITY

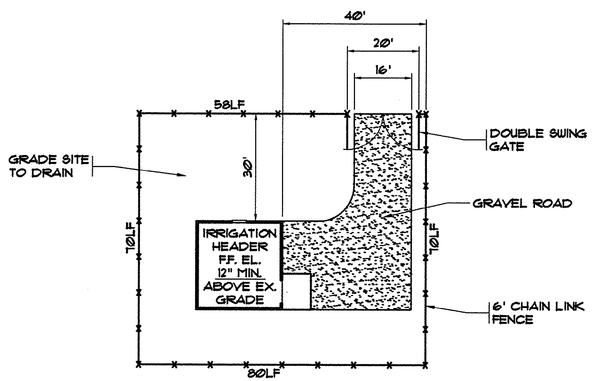

IRRIGATION HEADER BUILDING
SITE PLAN
N.T.S.

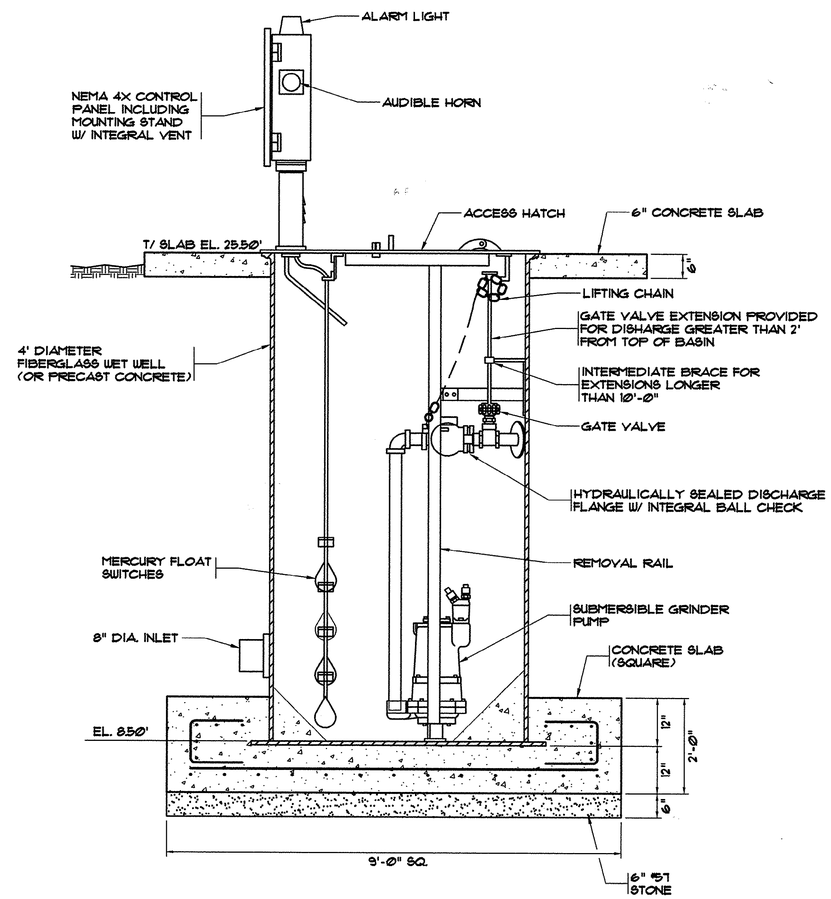

FILTER DRAIN PUMP STATION
SECTION VIEW
N.T.S.

45-003-014/53

REVISIONS			
SYM.	DESCRIPTION	DATE	BY
	AS-BUILT	8/02/01	CAR

SOUTH CAROLINA PROFESSIONAL ENGINEER REGISTERED No. 12335 JOSEPH W. McCOLLUM

HOBBS, UPCHURCH & ASSOCIATES, P.A.
CONSULTING ENGINEERS
MYRTLE BEACH, SOUTH CAROLINA 29577

SITE PLANS
FILTER DRAIN
PUMP STATION PLAN
AND SECTION

TP-TOP TREE FARM
EFFLUENT LAND
APPLICATION PROJECT
GRAND STRAND WATER
AND SEWER AUTHORITY

DATE:	MAR. 1999
DESIGNED:	JWM
DRAWN:	DC
CHECKED:	JWM
SCALE:	AS SHOWN

SHEET NO.
G-14
OF: 16

HOBBS, UPCHURCH & ASSOC. MB J:\GS9901\800\820\G-DWGS\AB-G-14.dwg EDITED BY: ARABON DATE: 08/29/01 TIME: 11:16 Layout: Model

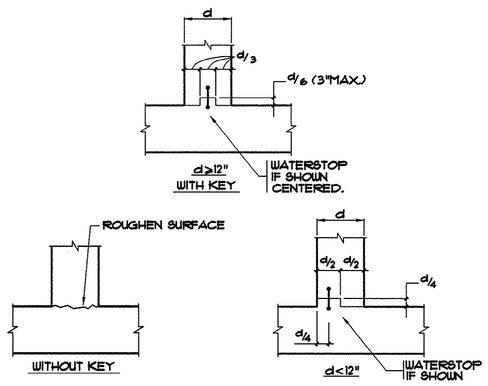

NOTE: ALL WATERSTOPS 6" PVC "DUMBBELL" TYPE UNLESS OTHERWISE NOTED.

STANDARD CONSTRUCTION JOINT DETAILS

N.T.S.

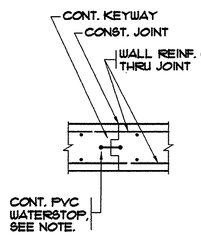

NOTE:
PROVIDE CONSTRUCTION JOINTS IN ALL WALLS AS REQUIRED FOR CONSTRUCTION AND AT 30'-0" MAX. PROVIDE CONTINUOUS PVC WATERSTOPS AT ALL VERT. WALL CONSTRUCTION JOINTS AT EXTERIOR WALLS AND ANY INTERIOR WALLS WHERE DIFFERENTIAL HEIGHTS OF FLUIDS EXIST ON EITHER SIDE OF WALL. PLACE CONC. IN ALTERNATE SECTIONS.

TYPICAL WALL OR SLAB CONSTRUCTION JOINT

N.T.S.

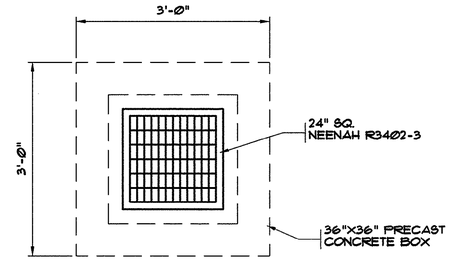

DROP INLET -PLAN VIEW

NTS

NOTE:
INLET FRAME AND GRATE RATED FOR H20-44.

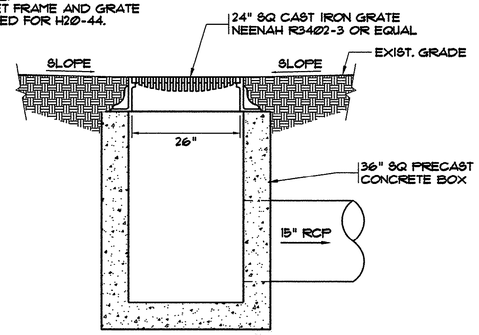

DROP INLET -SECTION

NTS

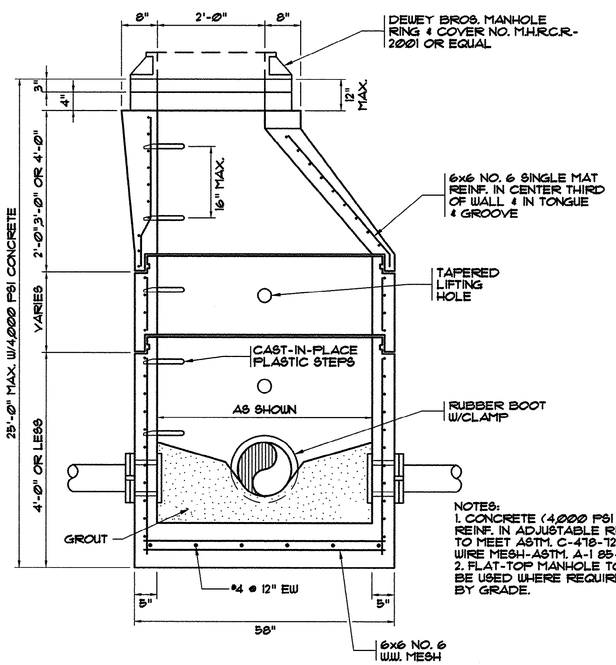

NOTES:
1. CONCRETE (4,000 PSI MIN.) REINF. IN ADJUSTABLE RINGS TO MEET ASTM. C-478-72 WIRE MESH-ASTM. A-1 85-69.
2. FLAT-TOP MANHOLE TO BE USED WHERE REQUIRED BY GRADE.

PRECAST MANHOLE DETAIL

N.T.S.

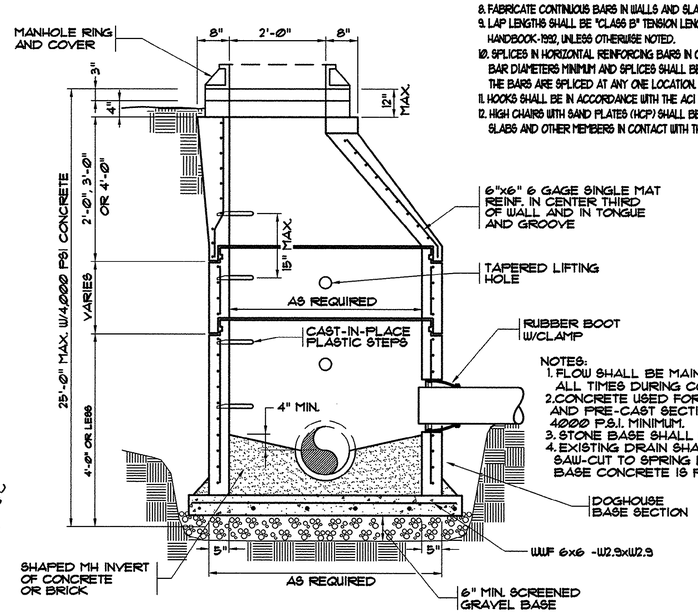

NOTES:
1. FLOW SHALL BE MAINTAINED AT ALL TIMES DURING CONSTUCTION.
2. CONCRETE USED FOR BASE SLAB AND PRE-CAST SECTIONS SHALL BE 4000 P.S.I. MINIMUM.
3. STONE BASE SHALL BE 6" MINIMUM.
4. EXISTING DRAIN SHALL BE SAW-CUT TO SPRING LINE AFTER BASE CONCRETE IS PLACED AND SET.

DOGHOUSE MANHOLE DETAIL (BUILT OVER EXISTING LINE)

N.T.S.

GENERAL NOTES

A. FOUNDATIONS.

1. MAXIMUM ALLOWABLE NET BEARING PRESSURE = 5000 PSF (FILTER FOUNDATION).
   = 2000 PSF (BUILDING FOUNDATION) PRESUMPTIVE.
2. EXCAVATIONS AND FORMS SHALL BE REVIEWED BY THE ENGINEER PRIOR TO PLACING CONCRETE.
3. AS DIRECTED BY THE ENGINEER, LOOSE AND UNSUITABLE MATERIAL SHALL BE REMOVED FROM THE BOTTOM OF THE FOUNDATIONS AND REPLACED WITH COMPACTED STRUCTURAL FILL OR STONE.
4. PLACE CONCRETE FOR WALLS AND SLABS IN ALTERNATE SECTIONS AND PROVIDE CONSTRUCTION JOINTS AT LOCATIONS SHOWN ON THE DRAWINGS, OR AT 30 FEET MAXIMUM.
5. PROVIDE BRACING AGAINST WALLS AS REQUIRED TO PREVENT DAMAGE DURING COMPACTION OF FILL.
6. ALL FILL BENEATH STRUCTURES AND ALL BACKFILL BEHIND WALLS SHALL BE SELECT MATERIAL FREE FROM ROOTS, TRASH, WOOD SCRAPS, AND OTHER EXTRANEOUS MATERIALS. PLACE FILL AND BACKFILL IN LIFTS NOT EXCEEDING EIGHT (8) INCHES AND COMPACT EACH LIFT TO 95% DENSITY AT OPTIMUM MOISTURE CONTENT AS MEASURED BY ASTM D698. FILL AND BACKFILL PLACEMENT SHALL BE UNDER THE CONTROL OF AN INDEPENDENT TESTING LABORATORY.

B. CONCRETE.

1. CONCRETE SHALL DEVELOP 4000 PSI MINIMUM COMPRESSIVE STRENGTH AT 28 DAYS.
2. CONCRETE WORK SHALL CONFORM TO ACI 318-95 INCLUDING SUPPLEMENTS AND ACI 350R-89.
3. IN ADDITION, CONCRETE WORK SHALL CONFORM TO ACI 301-96, EXCEPT AS OTHERWISE NOTED.
4. CONCRETE SHALL BE CURED A MINIMUM OF 7 DAYS BY ONE OR MORE METHODS SPECIFIED IN SECTION 5.3.6.4 OF ACI 301-96 EXCEPT POLYETHYLENE FILMS SHALL NOT BE USED FOR THE CURING OF CONCRETE WORK.
5. CONCRETE FORMWORK SHALL CONFORM TO ACI 347R-94 AND ACI MANUAL SP-4(95).
6. SLABS-ON-GRADE 6 INCHES THICK, UNLESS OTHERWISE NOTED.
7. PLACE 1/2 INCH EXPANSION JOINT MATERIAL BETWEEN EDGES OF SLABS AND VERTICAL SURFACES UNLESS OTHERWISE NOTED. AT SLABS OVER JOIST THE JOINT MATERIAL SHALL BE THE FULL DEPTH OF THE SLAB AND METAL FORMS.
8. PROVIDE CONSTRUCTION OR CONTROL JOINTS IN SLABS AT LOCATIONS SHOWN ON DRAWINGS, AT OFFSETS AND CHANGES IN DIRECTION, AND AT 30 FEET MAXIMUM.
9. CHAMFER EXPOSED EDGES OF CONCRETE 3/4 INCH, UNLESS OTHERWISE NOTED.

C. WATERSTOPS.

1. PROVIDE CONTINUOUS PVC WATERSTOPS WHERE SHOWN ON DRAWINGS, AT EXTERIOR WALL CONSTRUCTION JOINTS AND WHERE DIFFERENTIAL HEIGHTS OF FLUIDS EXIST ON EITHER SIDE OF WALL.
2. WATERSTOPS SHALL BE MANUFACTURED OF VIRGIN MATERIAL COMPOSED OF AN ELASTOMERIC POLYVINYL CHLORIDE COMPOUND MEETING THE REQUIREMENTS OF CORPS OF ENGINEERS CRD-C572. SUBMIT MANUFACTURER'S LITERATURE SHOWING COMPLIANCE WITH THE ABOVE SPECIFICATION AND SHOWING WATERSTOP SHAPES FOR USE.
3. WATERSTOPS AT CONSTRUCTION JOINTS SHALL BE 6-INCH MIN. WIDTH "DUMBBELL" TYPE UNLESS OTHERWISE INDICATED ON DRAWINGS.
4. ALL SPLICING OF WATERSTOPS SHALL BE SHOP FABRICATED EXCEPT THAT BUTT SPLICES MAY BE FIELD FABRICATED.

D. REINFORCING STEEL.

1. BARS SHALL BE ROLLED FROM NEW BILLET-STEEL OF DOMESTIC MANUFACTURE CONFORMING TO "STANDARD SPECIFICATION FOR DEFORMED AND PLAIN BILLET-STEEL BARS FOR CONCRETE REINFORCEMENT," ASTM A 615, GRADE 60 AND SUPPLEMENTARY REQUIREMENT S1.
2. WELDED WIRE FABRIC SHALL CONFORM TO "STANDARD SPECIFICATION FOR WELDED STEEL WIRE FABRIC FOR CONCRETE REINFORCEMENT," ASTM A 185.
3. DETAIL AND FABRICATE REINFORCING STEEL IN ACCORDANCE WITH THE AMERICAN CONCRETE INSTITUTE "ACI DETAILING MANUAL - 1988," PUBLICATION SP-66(94).
4. REINFORCING STEEL IN PLACE SHALL BE REVIEWED BY THE ENGINEER PRIOR TO PLACING CONCRETE.
5. FABRICATE CONTINUOUS BARS IN GRADE BEAMS TO THE LONGEST PRACTICABLE LENGTHS. SPLICE TOP BARS AT MID-SPAN ONLY AND BOTTOM BARS OVER SUPPORTS ONLY.
6. PROVIDE BARS AT CORNERS AND INTERSECTIONS OF THE SAME NUMBER AND SIZE AS LONGITUDINAL BARS IN FOOTINGS, GRADE BEAMS, SLABS AND WALLS, OR PROVIDE HOOKS IN HORIZONTAL BARS IN ACCORDANCE WITH "ACI DETAILING MANUAL."
7. PROVIDE 4-#5 BARS (2 EACH FACE) AT EACH SIDE OF OPENINGS IN SLABS AND WALLS AND EXTEND 2'-0" PAST OPENING. IF SUCH AN EXTENSION IS NOT OBTAINABLE, TERMINATE THE BAR WITH A STANDARD HOOK.
8. FABRICATE CONTINUOUS BARS IN WALLS AND SLABS TO THE LONGEST PRACTICABLE LENGTHS.
9. LAP LENGTHS SHALL BE "CLASS B" TENSION LENGTHS AS SPECIFIED IN TABLE 5-5(B) IN THE CRSI HANDBOOK-1992, UNLESS OTHERWISE NOTED.
10. SPLICES IN HORIZONTAL REINFORCING BARS IN CURVED OR CIRCULAR WALLS SHALL BE 40 BAR DIAMETERS MINIMUM AND SPLICES SHALL BE STAGGERED SO THAT NOT MORE THAN ONE HALF THE BARS ARE SPLICED AT ANY ONE LOCATION.
11. HOOKS SHALL BE IN ACCORDANCE WITH THE ACI SPECIFICATIONS, UNLESS OTHERWISE NOTED.
12. HIGH CHAIRS WITH SAND PLATES (HCP) SHALL BE USED TO SUPPORT REINFORCING STEEL IN FOOTINGS, SLABS AND OTHER MEMBERS IN CONTACT WITH THE EARTH.

E. GROUT.

1. PROVIDE NON-SHRINK GROUT UNDER ALL COLUMN BASE PLATES AND BEAM BEARING PLATES. NON-SHRINK GROUT SHALL CONFORM TO CORPS OF ENGINEERS SPECIFICATION CRD-C 621-83. GROUT SHALL BE NON-METALLIC AND NON-STAINING.

F. STRUCTURAL STEEL.

1. STEEL SHALL CONFORM TO "STANDARD SPECIFICATION FOR STRUCTURAL STEEL," ASTM A 36.
2. STEEL WORK SHALL CONFORM TO THE "SPECIFICATION FOR THE DESIGN, FABRICATION AND ERECTION OF STRUCTURAL STEEL FOR BUILDINGS," OF THE AMERICAN INSTITUTE OF STEEL CONSTRUCTION, INC., EFFECTIVE NOVEMBER 1, 1978, INCLUDING ALL SUPPLEMENTS, AND THE "CODE OF STANDARD PRACTICE FOR STEEL BUILDINGS AND BRIDGES," EFFECTIVE SEPTEMBER 1, 1986.
3. CONNECTION BOLTS SHALL BE 3/4 INCH DIAMETER CONFORMING TO "STANDARD SPECIFICATION FOR HIGH-STRENGTH BOLTS FOR STRUCTURAL STEEL JOINTS," ASTM A 325, UNLESS OTHERWISE NOTED. CONNECTIONS ARE BEARING TYPE WITH THREADS EXCLUDED FROM SHEAR PLANES. INSTALL EACH BOLT WITH A HARDENED WASHER UNDER THE NUT OR HEAD, WHICHEVER IS TURNED FOR TIGHTENING TO THE REQUIRED TENSION.
4. OVERSIZE HOLES AND SLOTTED HOLES SHALL NOT BE USED FOR BOLTED CONNECTIONS ON THIS PROJECT EXCEPT AT LOCATIONS NOTED ON THE DRAWINGS.
5. WELDING SHALL BE BY WELDERS AND WELDING OPERATORS WHO HAVE BEEN PREVIOUSLY QUALIFIED BY TESTS AS PRESCRIBED IN THE "STRUCTURAL WELDING CODE," AWS D11-84 OF THE AMERICAN WELDING SOCIETY TO PERFORM THE TYPES OF WELDS REQUIRED ON THIS PROJECT.
6. THE CONTRACTOR SHALL PROVIDE ADEQUATE TEMPORARY BRACING UNTIL SUCH PROTECTION IS NO LONGER REQUIRED FOR THE SAFE SUPPORT OF THE FRAMING.
7. ALL COPES, BLOCKS, CUTS, CUT-OUTS AND OTHER CUTTING OF STRUCTURAL MEMBERS SHALL HAVE ALL REENTRANT CORNERS SHAPED, NOTCH FREE, TO A RADIUS OF AT LEAST 1/2 INCH. THE FILLET AND ITS CONTIGUOUS CUTS SHALL MEET WITHOUT OFFSET OR CUTTING PAST THE POINT OF TANGENCY.
8. ANCHOR BOLT LENGTHS SHOWN ON THE DRAWINGS SHALL INCLUDE HOOKS OF NOT LESS THAN 3 INCHES IN LENGTH. PROVIDE ONE NUT AND ONE WASHER WITH EACH ANCHOR BOLT UNLESS OTHERWISE NOTED.

G. DESIGN LIVE LOADS.

1. STRUCTURAL MEMBERS ARE DESIGNED FOR FULL DEAD LOADS AND THE FOLLOWING LIVE LOADS:

A. GRATING LIVE LOAD	100 PSF
B. WIND	ASCE 7-93 EXPOSURE C, I=1.25, V=100 MPH
C. LATERAL EARTH LOADS	45 PCF EQUIVALENT FLUID PRESSURE (ABOVE WATER TABLE)
	85 PCF EQUIVALENT FLUID PRESSURE (BELOW WATER TABLE)
D. SEISMIC	A_a=0.05, A_v=0.05, EXPOSURE GROUP I

H. DIMENSIONS.

1. DIMENSIONS SHOWN TO EXISTING CONSTRUCTION ARE PLUS OR MINUS REGARDLESS OF WHETHER SHOWN AS SUCH ON THE DRAWINGS OR NOT. THE CONTRACTOR SHALL VERIFY IN THE FIELD ALL DIMENSIONS TO EXISTING CONSTRUCTION. THE CONTRACTOR SHALL ADVISE THE ENGINEER OF ANY DIFFERENCES IN DIMENSIONS PRIOR TO COMMENCING CONSTRUCTION.

J. ABBREVIATIONS.

THE FOLLOWING LIST OF ABBREVIATIONS IS NOT INTENDED TO REPRESENT ALL THOSE USED ON THESE DRAWINGS, BUT TO SUPPLEMENT THE MORE COMMON ABBREVIATIONS USED:

1. TYP. - TYPICAL
2. SIM. - SIMILAR
3. U.O.N. - UNLESS OTHERWISE NOTED
4. CLR. - CLEAR, CLEARANCE
5. TCJ, CJ - TYPICAL CONTROL JOINT, TYPICAL CONSTRUCTION JOINT
6. EJ - EXPANSION JOINT

K. CONSTRUCTION SAFETY.

THESE STRUCTURAL DRAWINGS DO NOT CONTAIN NECESSARY COMPONENTS FOR SAFETY DURING CONSTRUCTION.

THESE DRAWINGS REFLECT
AS-BUILT
CONDITIONS

REVIEWED BY: _____
INSPECTIONS DATE

REVIEWED BY: _____
ENGINEERING DATE

GRAND STRAND WATER AND SEWER AUTHORITY

NOTE:
1. * DENOTES "CLASS B" LAP SPLICE.
2. VERTICAL REINFORCING NOT SHOWN FOR CLARITY. CORNER BARS MAY BE USED IN LIEU OF HOOKS.

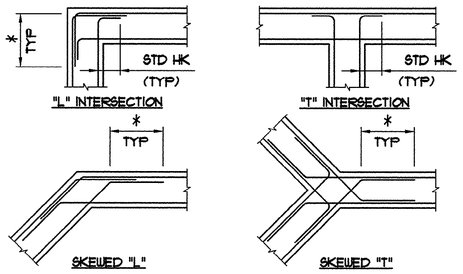

TYPICAL WALL INTERSECTION REINFORCING DETAIL

N.T.S.

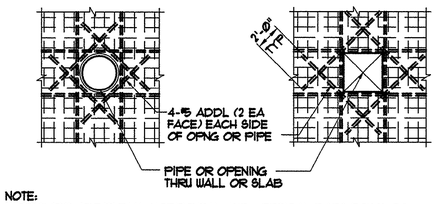

NOTE:
1. PROVIDE ADDITIONAL HORIZONTAL AND VERTICAL BARS EQUAL TO THE NUMBER OF BARS TERMINATED AT OPENING, HALF EACH SIDE.

TYPICAL ADDITIONAL REINFORCING AT PIPE OR OPENING

N.T.S.

45-003-015/55

REVISIONS			
SYM.	DESCRIPTION	DATE	BY
	AS-BUILT	8/02/01	CAR

SOUTH CAROLINA PROFESSIONAL ENGINEER REGISTERED No. 12335 JOHN M. HOBBS

HOBBS, UPCHURCH & ASSOCIATES, P.A.
CONSULTING ENGINEERS
MYRTLE BEACH, SOUTH CAROLINA 29577

STRUCTURAL DETAILS/ GENERAL NOTES

TIP-TOP TREE FARM EFFLUENT LAND APPLICATION PROJECT
GRAND STRAND WATER AND SEWER AUTHORITY

DATE:	MAR. 1999
DESIGNED:	JWM
DRAWN:	DC
CHECKED:	JWM
SCALE:	AS SHOWN
SHEET NO.	G-15
OF:	16

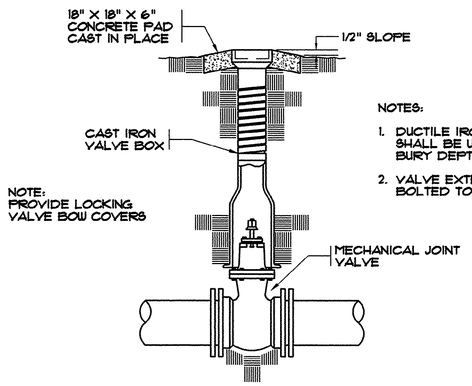

NOTES:

1. DUCTILE IRON VALVE BOX EXTENSIONS SHALL BE USED ON THE VALVES WITH BURY DEPTHS OVER 15 FEET
2. VALVE EXTENSION STEMS SHALL BE BOLTED TO VALVE OPERATOR NUT.

VALVE BOX ASSEMBLY

N.T.S.

NOTE:
THRUST BLOCKING DIMENSIONS ARE BASED ON A TEST PRESSURE OF 200 PSI. CONTRACTOR SHALL SUBMIT CALCULATIONS TO ENGINEER FOR REDUCED BLOCKING DIMENSIONS BASED ON ACTUAL OPERATING PRESSURES.

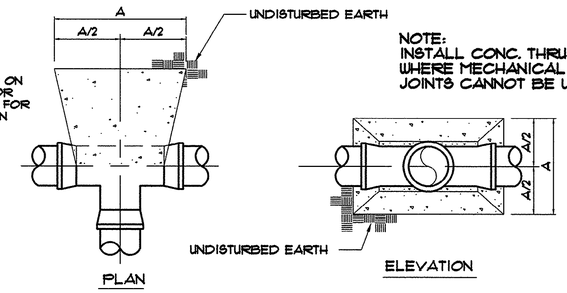

NOTE:
INSTALL CONC. THRUST BLOCKING WHERE MECHANICAL RESTRAINED JOINTS CANNOT BE UTILIZED.

NOTE: THRUST BLOCK SIZE DETERMINED BY SMALLEST DIA. OF TEE

DIM. (IN INCHES)	PIPE SIZE (INCHES)								
	6"	8"	12"	16"	20"	24"	30"	36"	48"
A	5	9	19	35	53	77	120	172	320

THRUST BLOCK DETAIL FOR TEES

N.T.S.

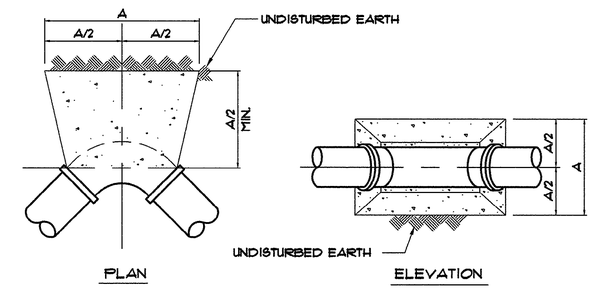

NOTE: THRUST BLOCKS SHALL BE CONSTRUCTED OF 2000 P.S.I. CONCRETE

TABLE "A" DIMENSIONS (IN FEET)

BEND	PIPE SIZE (NOM. DIA. IN INCHES)								
	6"	8"	12"	16"	20"	24"	30"	36"	48"
90°	5	9	19	35	53	77	120	172	320
45°	3	5	11	19	29	42	65	94	166
22 1/2°	2	3	6	10	15	22	34	48	85
11 1/4°	1	2	3	5	8	11	17	24	43

THRUST BLOCK DETAIL FOR WATER MAIN BENDS

N.T.S.

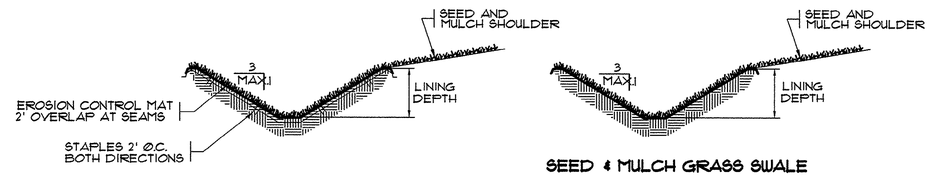

E.C. MAT GRASS SWALE
(SHALL BE USED IN ALL SWALE CROSSINGS)

SEED & MULCH GRASS SWALE

SWALE/SHOULDER PROTECTION

N.T.S.

NOTE: PREPARE, SEED, AND INSTALL TEMPORARY LINING ON DISTURBED AREA OF DITCH.

THESE DRAWINGS REFLECT
AS-BUILT
CONDITIONS

REVIEWED BY: _____
INSPECTIONS DATE

REVIEWED BY: _____
ENGINEERING DATE

GRAND STRAND WATER AND SEWER AUTHORITY

SEEDBED PREPARATION

1. CHISEL COMPACTED AREAS AND SPREAD TOPSOIL 3 INCHES DEEP OVER ADVERSE SOIL CONDITIONS, IF AVAILABLE.
2. RIP THE ENTIRE AREA TO 6" DEPTH.
3. REMOVE ALL LOOSE ROCK, ROOTS, AND OTHER OBSTRUCTIONS LEAVING SURFACE REASONABLY SMOOTH AND UNIFORM.
4. APPLY AGRICULTURAL LIME AND FERTILIZER UNIFORMLY AND MIX WITH SOIL (SEE BELOW *).
5. CONTINUE TILLAGE UNTIL A WELL-PULVERIZED, FIRM, REASONABLY UNIFORM SEEDBED IS PREPARED 4 TO 6 INCHES DEEP.
6. SEED ON A FRESHLY PREPARED SEEDBED AND COVER SEED LIGHTLY WITH SEEDING EQUIPMENT OR CULTIPACK AFTER SEEDING.
7. MULCH IMMEDIATELY AFTER SEEDING.
8. INSPECT ALL SEEDING AREAS AND MAKE NECESSARY REPAIRS OR RESEED WITHIN THE PLANTING SEASON, IF POSSIBLE. IF STAND SHOULD BE OVER 60% DAMAGED, REESTABLISH FOLLOWING ORIGINAL LIME, FERTILIZER, AND SEEDING RATES.
9. CONSULT CONSERVATION INSPECTOR ON MAINTENANCE AND FERTILIZATION AFTER PERMANENT COVER IS ESTABLISHED.

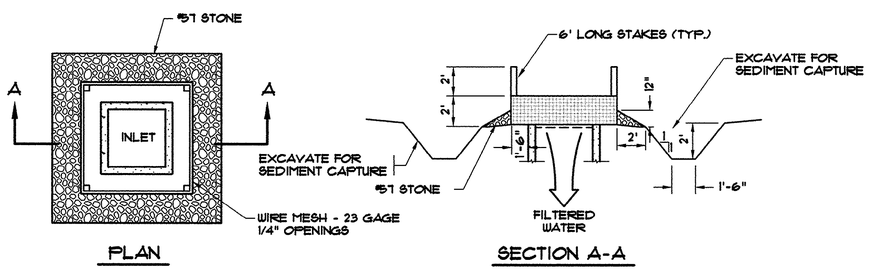

TEMPORARY INLET PROTECTION DETAIL

SCALE: NONE

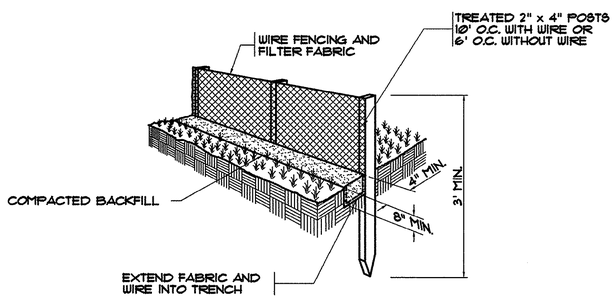

SILT FENCE DETAIL

N.T.S.

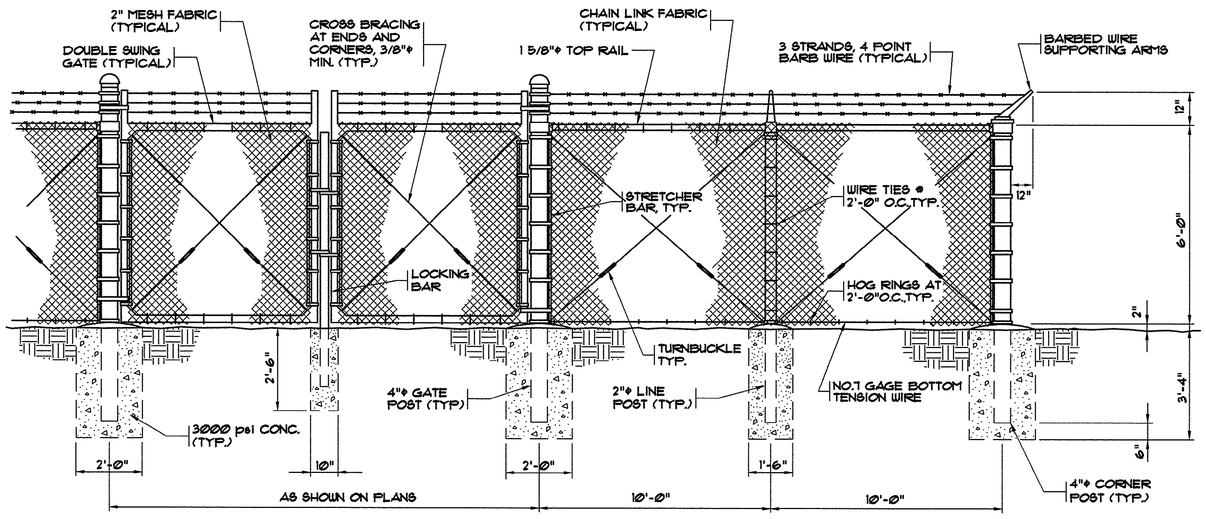

6' CHAIN LINK FENCE AND DOUBLE SWING GATE DETAIL

N.T.S.

45-003-016/53

REVISIONS			
SYM.	DESCRIPTION	DATE	BY
	AS-BUILT	8/02/01	CAR

SOUTH CAROLINA PROFESSIONAL ENGINEER No. 12335 REGISTERED JAMES W. HOBBS

HOBBS, UPCHURCH & ASSOCIATES, P.A.
CONSULTING ENGINEERS
MYRTLE BEACH, SOUTH CAROLINA 29577

MISCELLANEOUS DETAILS

TIP-TOP TREE FARM EFFLUENT LAND APPLICATION PROJECT
GRAND STRAND WATER AND SEWER AUTHORITY

DATE:	MAR. 1999
DESIGNED:	JWM
DRAWN:	DC
CHECKED:	JWM
SCALE:	AS SHOWN
SHEET NO.	G-16
OF:	16

HOBBS, UPCHURCH & ASSOC. MB J:\GS9901\800\820\G-DWGS\AB-G-16.dwg EDITED BY: ARABON DATE: 08/29/01 TIME: 11:18 Layout: Model

THESE DRAWINGS REFLECT
AS-BUILT
CONDITIONS

REVIEWED BY: _____
INSPECTIONS DATE

REVIEWED BY: _____
ENGINEERING DATE

GRAND STRAND WATER AND SEWER AUTHORITY

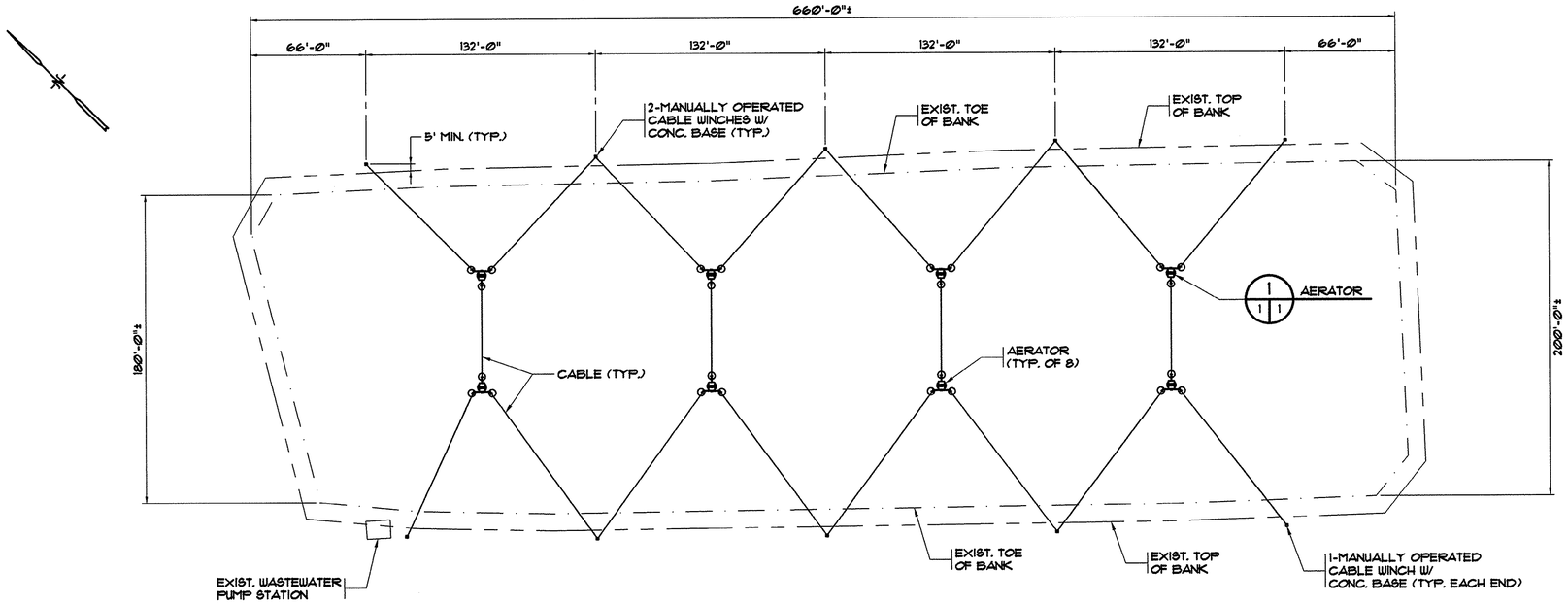

EXIST. EFFLUENT/WASTEWATER POND CABLE MOORING AERATOR ADDITION

SCALE: 1" = 40'-0"

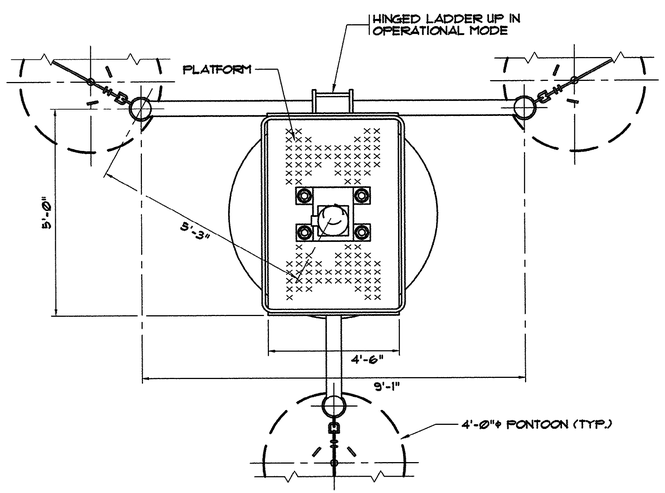

PLAN VIEW

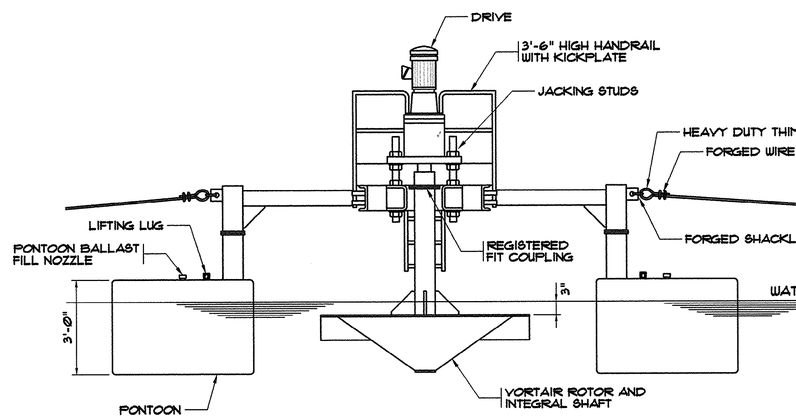

ELEVATION VIEW

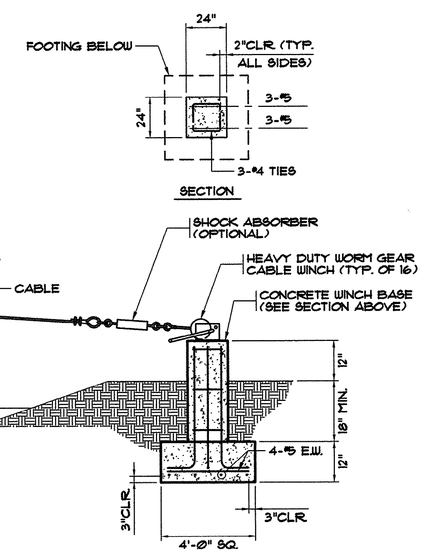

1/1 RAFT MOUNTED CABLE MOORING AERATOR

N.T.S.

45-003-017/53

REVISIONS

STM.	DESCRIPTION	DATE	BY
	AS-BUILT	8/27/01	CAR

SOUTH CAROLINA PROFESSIONAL ENGINEER No. 12335 REGISTERED JOSEPH W. MCCOLLUM

HOBBS, UPCHURCH & ASSOCIATES, P.A.
CONSULTING ENGINEERS
MYRTLE BEACH, SOUTH CAROLINA 29577

EXIST. EFFLUENT/ WASTEWATER POND AND AERATOR DETAILS

TIP-TOP TREE FARM EFFLUENT LAND APPLICATION PROJECT

GRAND STRAND WATER AND SEWER AUTHORITY

DATE:	MAR. 1999
DESIGNED:	JWM
DRAWN:	DC
CHECKED:	JWM
SCALE:	AS SHOWN

SHEET NO.
AER-1
OF: 1

HOBBS, UPCHURCH & ASSOC. MB J:\CS99011\800\820\C-DWGS\EFF-POND.dwg EDITED BY: ARNDRA DATE: 08/29/01 TIME: 11:19 Layout: Model

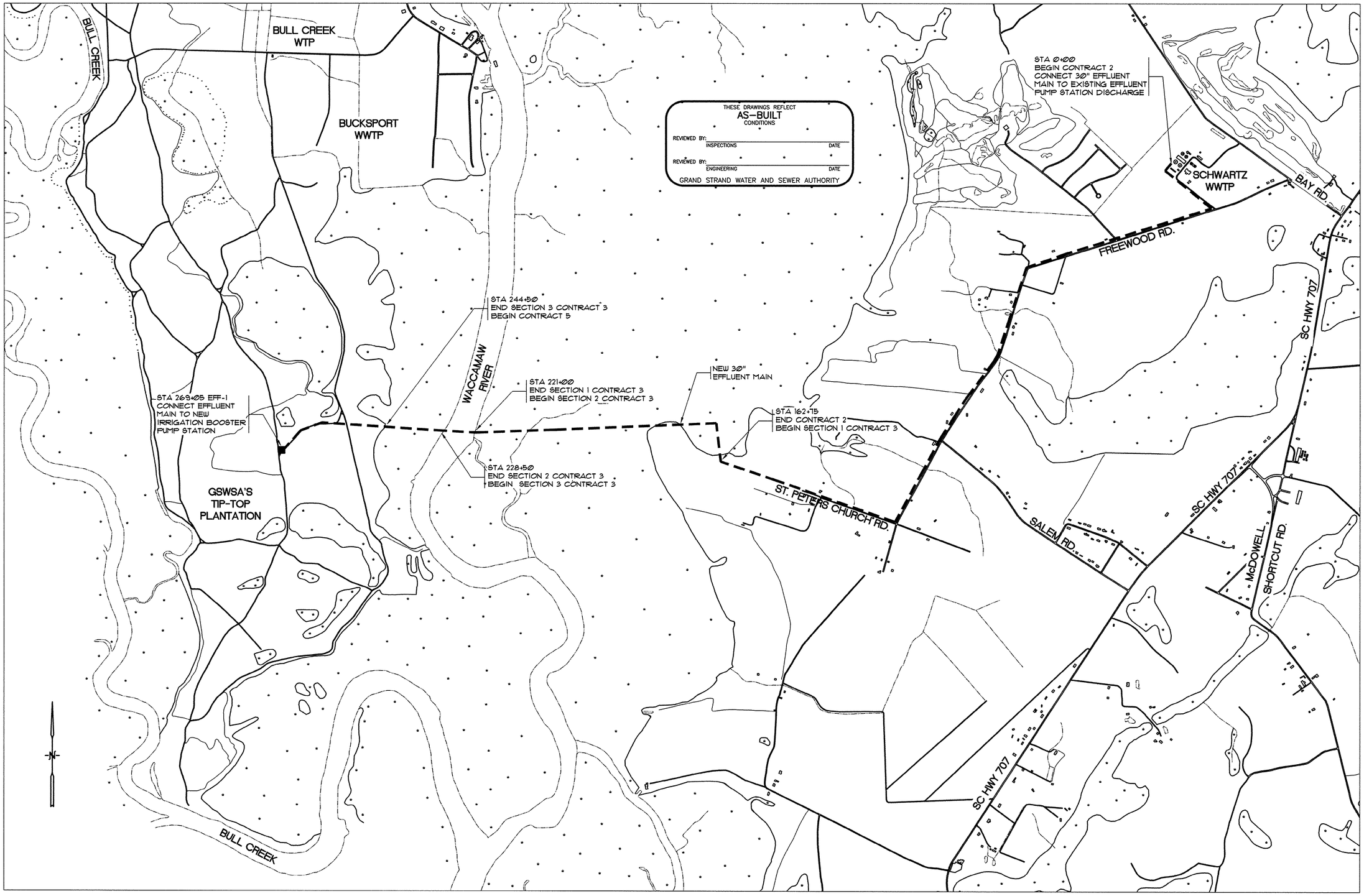

30" EFFLUENT MAIN LAYOUT MAP

SCALE: 1" = 3000'

3000' 0 3000' 6000'

45-003-018/53

REVISIONS			
SYM.	DESCRIPTION	DATE	BY
	SECTION 3 CONTRACT 3 AS-BUILT	9/8/99 8/27/01	KLM CAR

SOUTH CAROLINA PROFESSIONAL ENGINEER No. 12335 REGISTERED JOSEPH M. MCCRACKEN

HOBBS, UPCHURCH & ASSOCIATES, P.A.
CONSULTING ENGINEERS
MYRTLE BEACH, SOUTH CAROLINA 29577

30" EFFLUENT MAIN LAYOUT MAP

TIP-TOP TREE FARM EFFLUENT LAND APPLICATION PROJECT
GRAND STRAND WATER AND SEWER AUTHORITY

DATE:	MAR. 1999
DESIGNED:	WDL
DRAWN:	KLM
CHECKED:	WDL
SCALE:	AS SHOWN

SHEET NO.
EFF-1
OF: 21

HOBBS, UPCHURCH & ASSOC. MB J:\GS9901\820\820\LAYOUT.dwg EDITED BY: ARABON DATE: 08/29/01 TIME: 11:23 XREFS: , J:\GS9901\820\865\Buckeville\parcelts.dwg Layout: Layout1

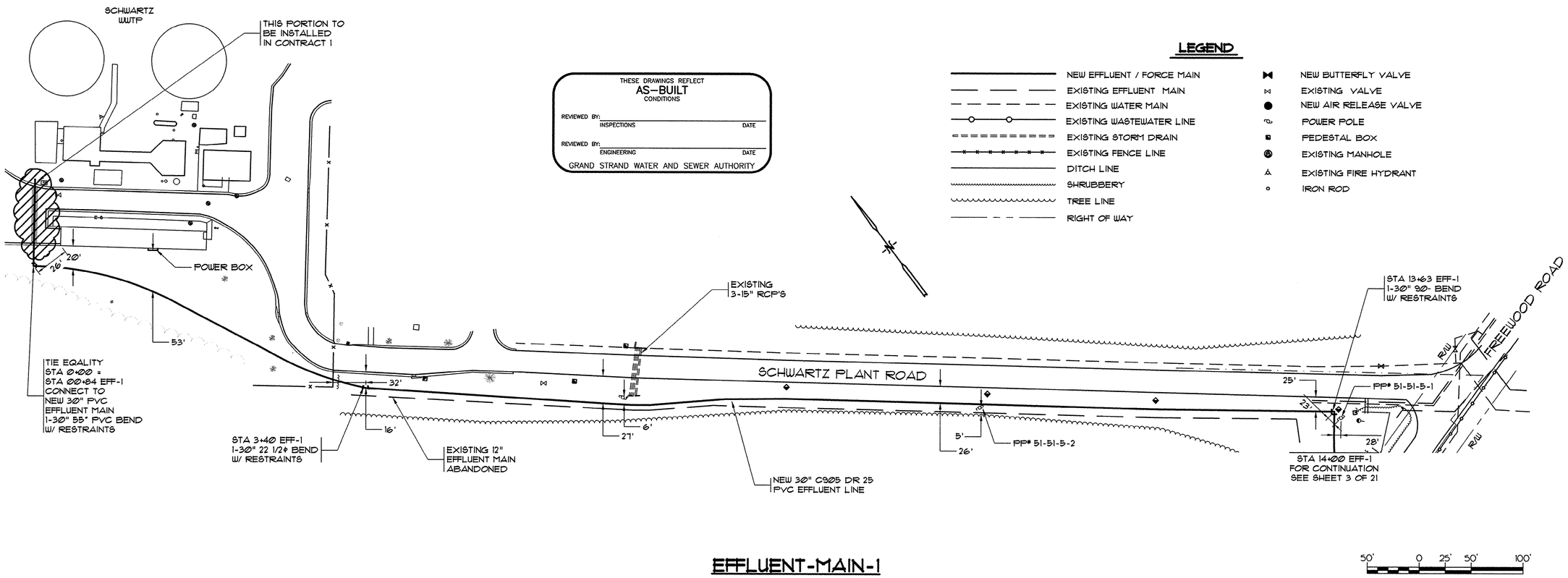

EFFLUENT-MAIN-1

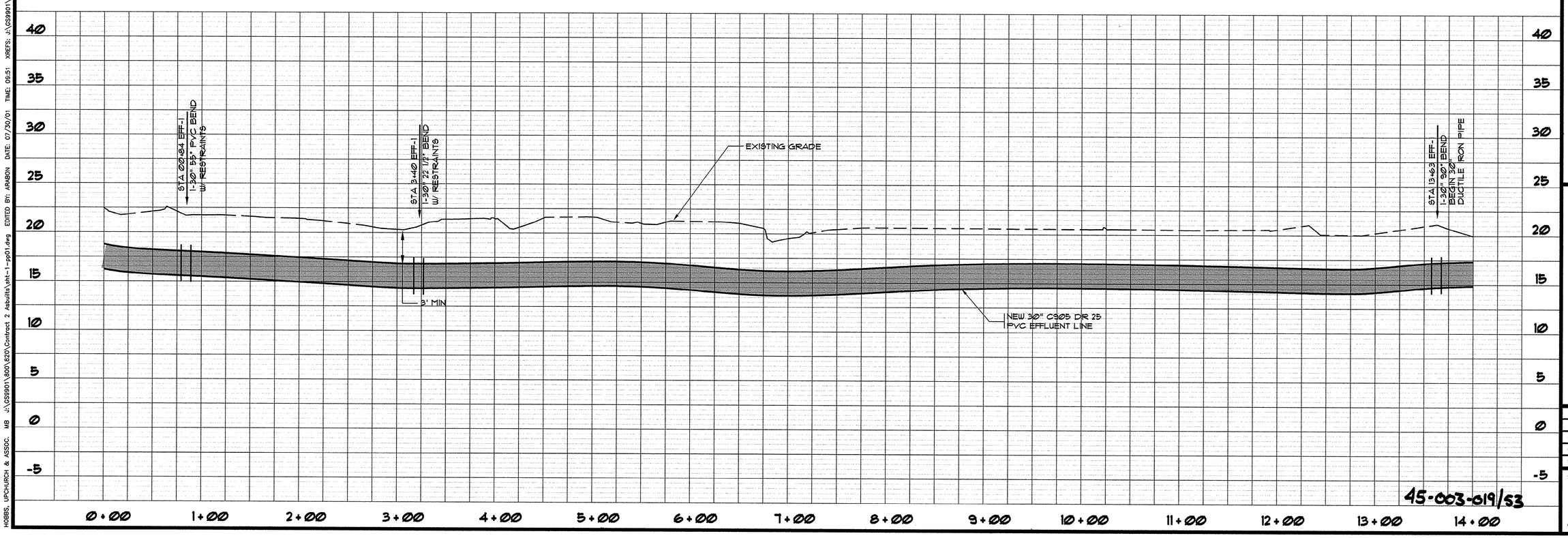

45-003-019/53

REVISIONS

SYM.	DESCRIPTION	DATE	BY
	TIE EQUALITY STA 00+84	9/6/99	KLM
	AS-BUILT	12/5/00	ARM
	AS-BUILT	7/19/01	CAR

SOUTH CAROLINA PROFESSIONAL ENGINEER No. 12335 REGISTERED W. HADDON WOODWARD

HOBBS, UPCHURCH & ASSOCIATES, P.A.
CONSULTING ENGINEERS
MYRTLE BEACH, SOUTH CAROLINA 29577

PLAN AND PROFILE
EFFLUENT MAIN 1

TIP-TOP TREE FARM
EFFLUENT LAND
APPLICATION PROJECT
GRAND STRAND WATER
AND SEWER AUTHORITY

DATE:	MAR. 1999
DESIGNED:	WDL
DRAWN:	KLM
CHECKED:	WDL
SCALE:	AS SHOWN
SHEET NO.	EFF-2
OF:	21

HOBBS, UPCHURCH & ASSOC. MB J:\GS901\800\820\Contract 2 Asbuilts\sht-1-pp01.dwg EDITED BY: ARABON DATE: 07/30/01 TIME: 09:51 XREFS: J:\GS901\800\810\points.dwg Layout: Layout1

LEGEND

- NEW EFFLUENT / FORCE MAIN
- EXISTING EFFLUENT MAIN
- EXISTING WATER MAIN
- EXISTING WASTEWATER LINE
- EXISTING STORM DRAIN
- EXISTING FENCE LINE
- DITCH LINE
- SHRUBBERY
- TREE LINE
- RIGHT OF WAY
- NEW BUTTERFLY VALVE
- EXISTING VALVE
- NEW AIR RELEASE VALVE
- POWER POLE
- PEDESTAL BOX
- EXISTING MANHOLE
- EXISTING FIRE HYDRANT
- IRON ROD

THESE DRAWINGS REFLECT
AS-BUILT
CONDITIONS

REVIEWED BY: _____ INSPECTIONS DATE

REVIEWED BY: _____ ENGINEERING DATE

GRAND STRAND WATER AND SEWER AUTHORITY

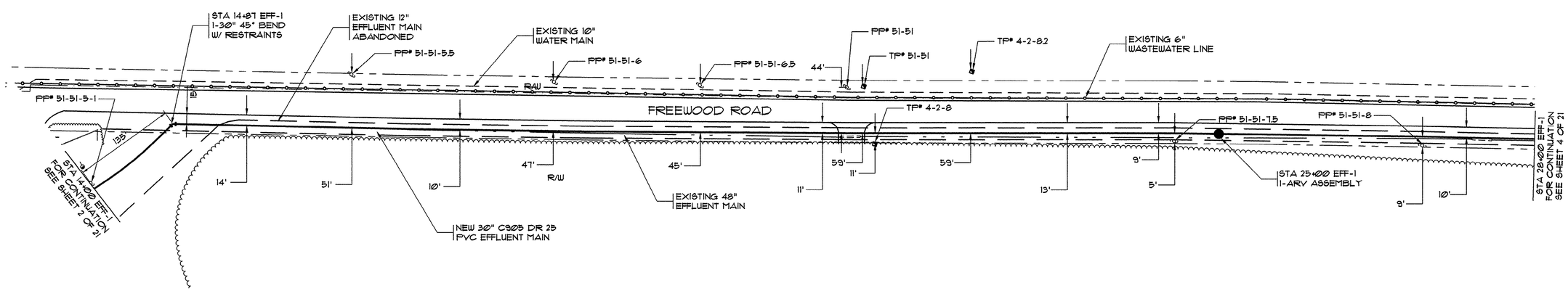

EFFLUENT-MAIN-1

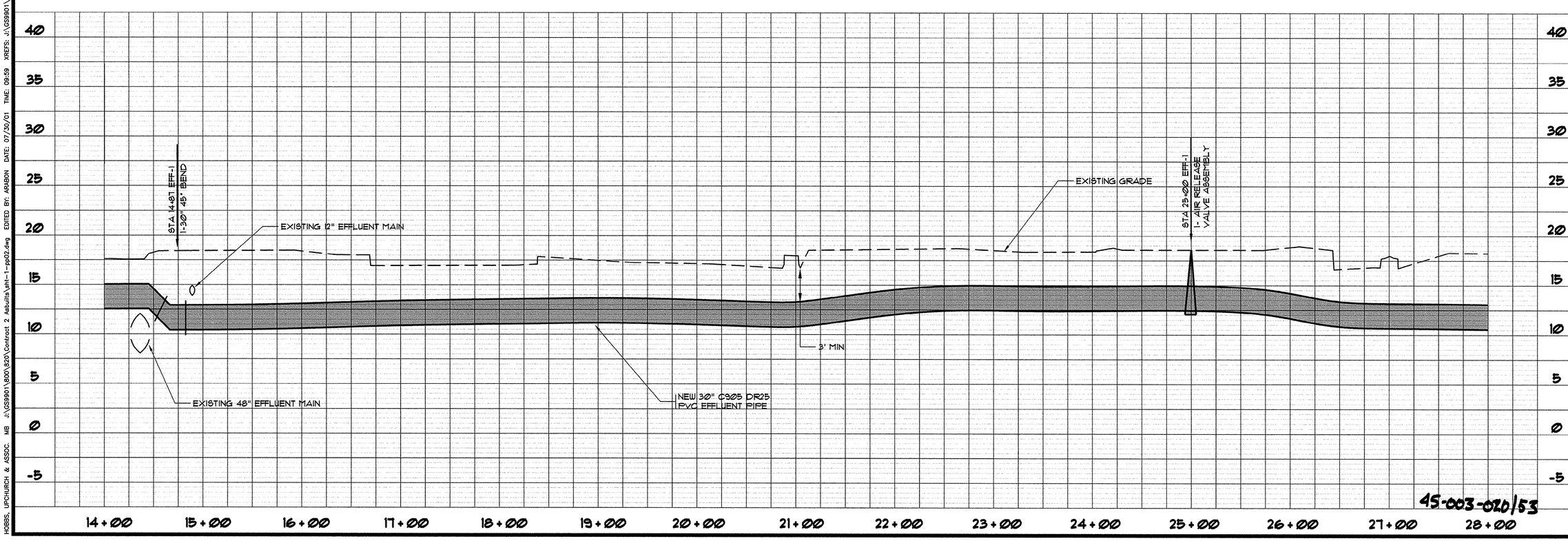

45-003-020/53

REVISIONS			
SYM.	DESCRIPTION	DATE	BY
	AS- BUILT	12/5/00	ARM
	AS- BUILT	7/19/01	CAR

SOUTH CAROLINA PROFESSIONAL ENGINEER REGISTERED No. 12335 JOSEPH W. McCORQUODALE

HOBBS, UPCHURCH & ASSOCIATES, P.A.
CONSULTING ENGINEERS
MYRTLE BEACH, SOUTH CAROLINA 29577

PLAN AND PROFILE
EFFLUENT MAIN 1

TIP-TOP TREE FARM
EFFLUENT LAND
APPLICATION PROJECT
GRAND STRAND WATER
AND SEWER AUTHORITY

DATE:	MAR. 1999
DESIGNED:	WDL
DRAWN:	KLM
CHECKED:	WDL
SCALE:	AS SHOWN

SHEET NO.
EFF-3
OF: 21

HOBBS, UPCHURCH & ASSOC. MB J:\GS9901\800\820\Contract 2 Asbuilts\pht-1-pp02.dwg EDITED BY: ARABON DATE: 07/30/01 TIME: 09:59 XREFS: J:\GS9901\800\810\points.dwg Layout: Layout1

THESE DRAWINGS REFLECT
AS-BUILT
CONDITIONS

REVIEWED BY: _____ INSPECTIONS DATE

REVIEWED BY: _____ ENGINEERING DATE

GRAND STRAND WATER AND SEWER AUTHORITY

LEGEND

- NEW EFFLUENT / FORCE MAIN
- EXISTING EFFLUENT MAIN
- EXISTING WATER MAIN
- EXISTING WASTEWATER LINE
- EXISTING STORM DRAIN
- EXISTING FENCE LINE
- DITCH LINE
- SHRUBBERY
- TREE LINE
- RIGHT OF WAY
- NEW BUTTERFLY VALVE
- EXISTING VALVE
- NEW AIR RELEASE VALVE
- POWER POLE
- PEDESTAL BOX
- EXISTING MANHOLE
- EXISTING FIRE HYDRANT
- IRON ROD

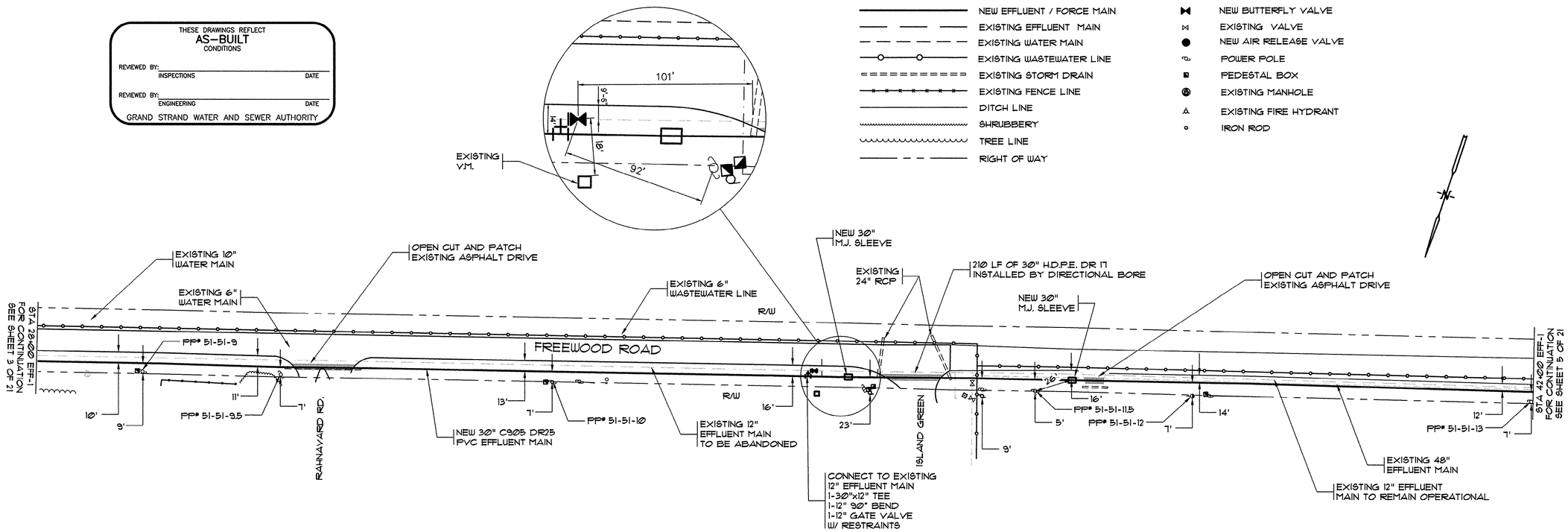

EFFLUENT-MAIN-1

50' 0 25' 50' 100'

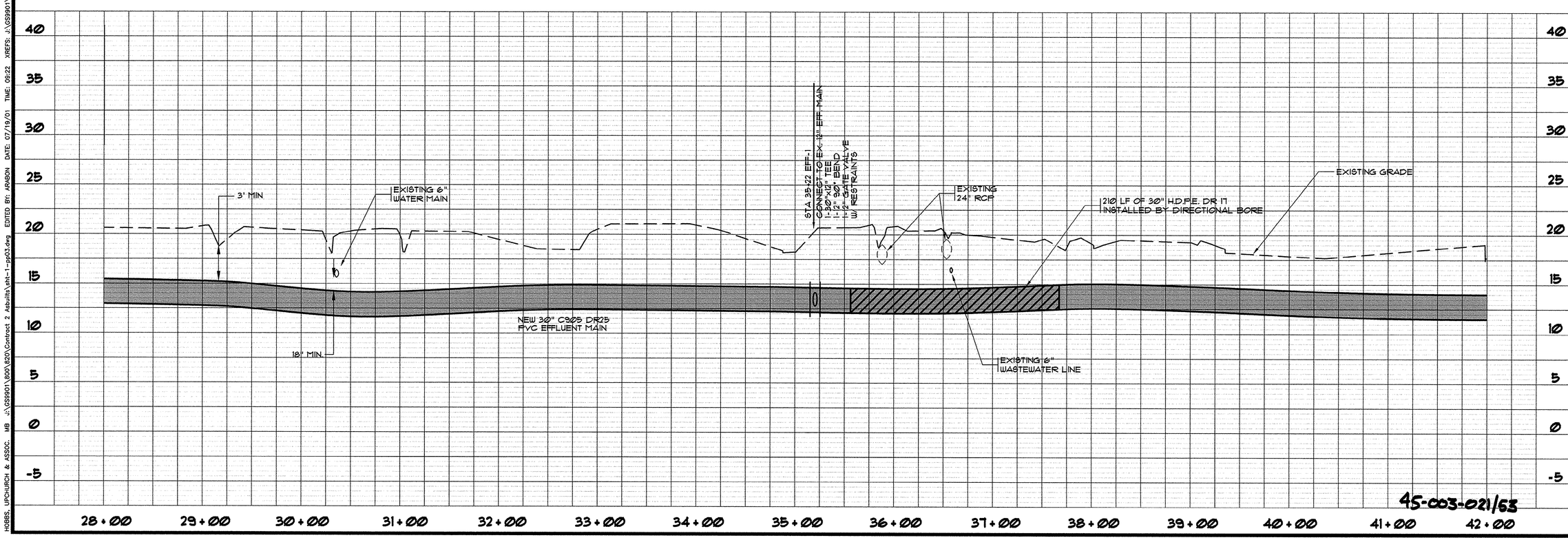

45-003-021/63

REVISIONS			
STM.	DESCRIPTION	DATE	BY
	ADDITIONAL OPEN CUT AND PATCH	9/7/99	KLM
	AS-BUILT	12/5/00	ARM
	AS-BUILT	7/19/01	CAR

SOUTH CAROLINA PROFESSIONAL ENGINEER No. 12335 REGISTERED JOSEPH W. MCCOLGAN

HOBBS, UPCHURCH & ASSOCIATES, P.A.
CONSULTING ENGINEERS
MYRTLE BEACH, SOUTH CAROLINA 29577

PLAN AND PROFILE EFFLUENT MAIN 1

TIP-TOP TREE FARM EFFLUENT LAND APPLICATION PROJECT

GRAND STRAND WATER AND SEWER AUTHORITY

DATE:	MAR. 1999
DESIGNED:	WDL
DRAWN:	KLM
CHECKED:	WDL
SCALE:	AS SHOWN

SHEET NO. EFF-4 OF: 21

HOBBS, UPCHURCH & ASSOC. MB J:\GS9901\800\820\Contract 2 Asbuilts\eht-1-pp03.dwg EDITED BY: ARABON DATE: 07/19/01 TIME: 09:22 XREFS: J:\GS9901\800\810\points.dwg Layout: Layout1

THESE DRAWINGS REFLECT
AS-BUILT
CONDITIONS

REVIEWED BY: _____ INSPECTIONS DATE

REVIEWED BY: _____ ENGINEERING DATE

GRAND STRAND WATER AND SEWER AUTHORITY

LEGEND

- NEW EFFLUENT / FORCE MAIN
- EXISTING EFFLUENT MAIN
- EXISTING WATER MAIN
- EXISTING WASTEWATER LINE
- EXISTING STORM DRAIN
- EXISTING FENCE LINE
- DITCH LINE
- SHRUBBERY
- TREE LINE
- RIGHT OF WAY
- NEW BUTTERFLY VALVE
- EXISTING VALVE
- NEW AIR RELEASE VALVE
- POWER POLE
- PEDESTAL BOX
- EXISTING MANHOLE
- EXISTING FIRE HYDRANT
- IRON ROD

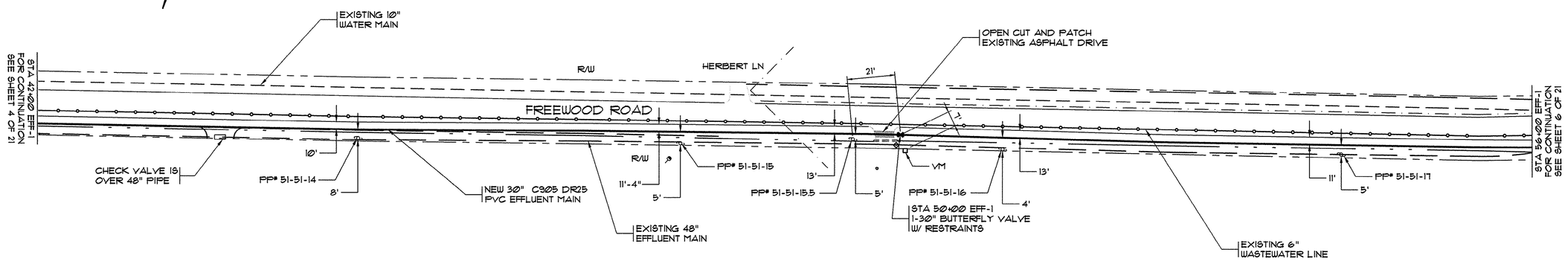

EFFLUENT-MAIN-1

50' 0 25' 50' 100'

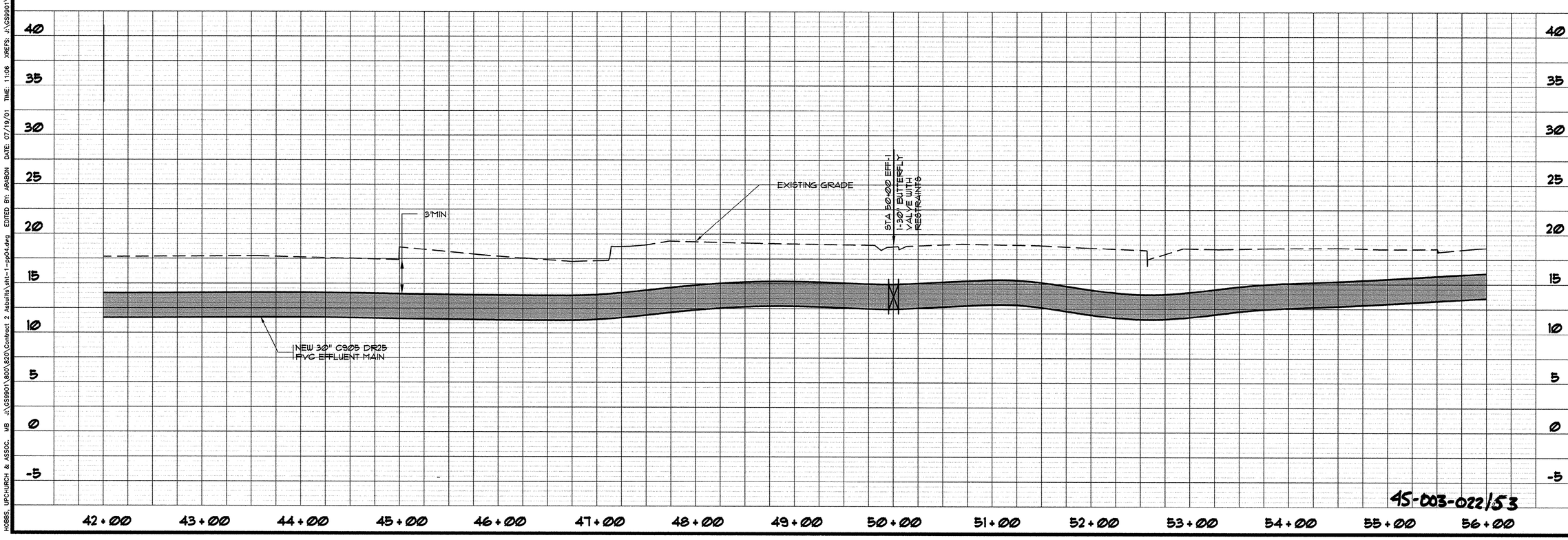

45-003-022/53

REVISIONS			
SYM.	DESCRIPTION	DATE	BY
	ADDITIONAL OPEN CUT AND PATCH	9/7/99	KLM
	AS-BUILT	12/5/00	ARM
	AS-BUILT	7/19/01	CAR

SOUTH CAROLINA PROFESSIONAL ENGINEER No. 12335 REGISTERED JOSEPH W. HOBBS

HOBBS, UPCHURCH & ASSOCIATES, P.A.
CONSULTING ENGINEERS
MYRTLE BEACH, SOUTH CAROLINA 29577

PLAN AND PROFILE
EFFLUENT MAIN 1

TIP-TOP TREE FARM
EFFLUENT LAND
APPLICATION PROJECT
GRAND STRAND WATER AND SEWER AUTHORITY

DATE:	MAR. 1999
DESIGNED:	WDL
DRAWN:	KLM
CHECKED:	WDL
SCALE:	AS SHOWN

SHEET NO. EFF-5
OF: 21

HOBBS, UPCHURCH & ASSOC. MB J:\GS9901\800\820\Contract 2 Asbuilts\sht-1-pp04.dwg EDITED BY: ARABON DATE: 07/19/01 TIME: 11:06 XREFS: J:\GS9901\800\810\points.dwg Layout: Layout1

THESE DRAWINGS REFLECT
AS-BUILT
CONDITIONS

REVIEWED BY: _____ INSPECTIONS DATE

REVIEWED BY: _____ ENGINEERING DATE

GRAND STRAND WATER AND SEWER AUTHORITY

LEGEND

- NEW EFFLUENT / FORCE MAIN
- EXISTING EFFLUENT MAIN
- EXISTING WATER MAIN
- EXISTING WASTEWATER LINE
- EXISTING STORM DRAIN
- EXISTING FENCE LINE
- DITCH LINE
- SHRUBBERY
- TREE LINE
- RIGHT OF WAY
- NEW BUTTERFLY VALVE
- EXISTING VALVE
- NEW AIR RELEASE VALVE
- POWER POLE
- PEDESTAL BOX
- EXISTING MANHOLE
- EXISTING FIRE HYDRANT
- IRON ROD

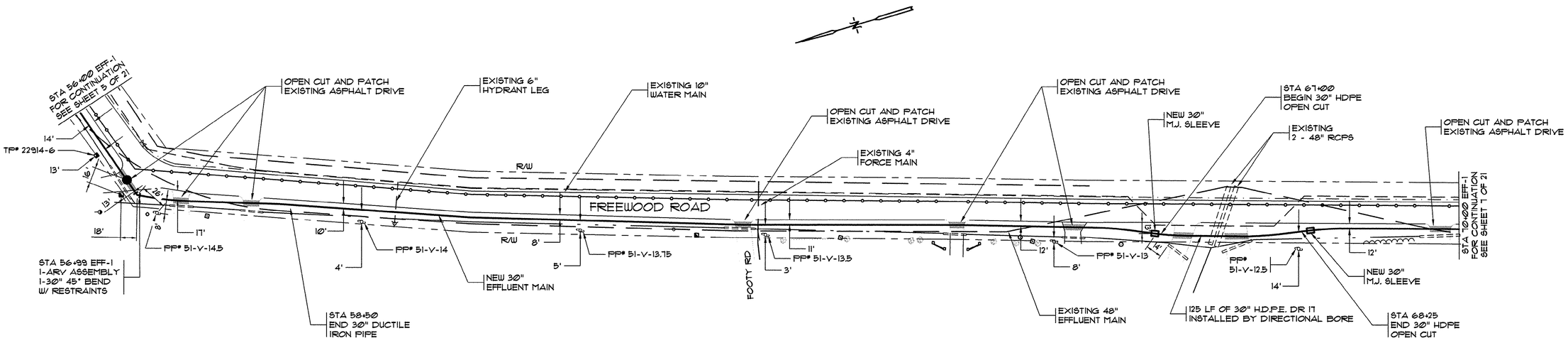

EFFLUENT-MAIN-1

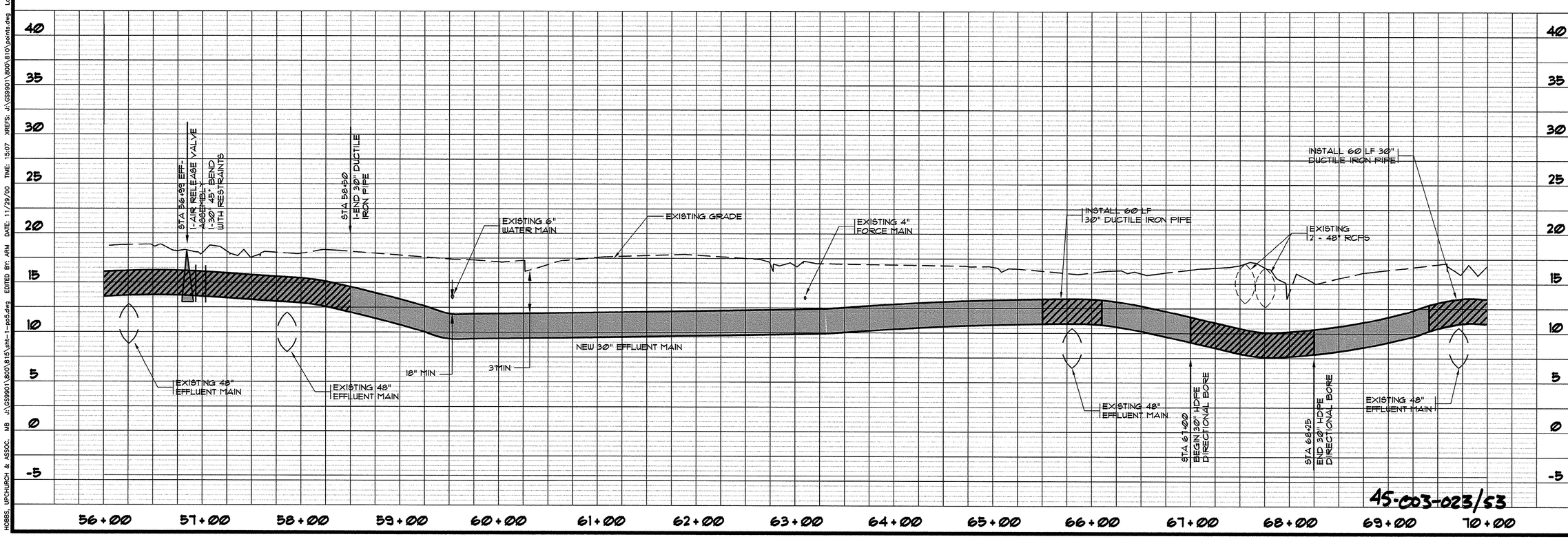

45-C03-023/53

REVISIONS			
SYM.	DESCRIPTION	DATE	BY
	ADDITIONAL OPEN CUT AND PATCH	9/7/99	KLM
	AS-BUILT	7/19/01	CAR

SOUTH CAROLINA REGISTERED PROFESSIONAL ENGINEER No. 12335 JOSEPH W. MCDONALD

HOBBS, UPCHURCH & ASSOCIATES, P.A.
CONSULTING ENGINEERS
MYRTLE BEACH, SOUTH CAROLINA 29577

PLAN AND PROFILE
EFFLUENT MAIN 1

TIP-TOP TREE FARM
EFFLUENT LAND
APPLICATION PROJECT
GRAND STRAND WATER AND SEWER AUTHORITY

DATE:	MAR. 1999
DESIGNED:	WDL
DRAWN:	KLM
CHECKED:	WDL
SCALE:	AS SHOWN

SHEET NO. EFF-6
OF: 21

HOBBS, UPCHURCH & ASSOC. MB J:\GS9901\800\815\aht-1-pp5.dwg EDITED BY: ARM DATE: 11/29/00 TIME: 15:07 XREFS: J:\GS9901\800\810\points.dwg Layout: Layout1

THESE DRAWINGS REFLECT
AS-BUILT
CONDITIONS

REVIEWED BY: _____ INSPECTIONS DATE

REVIEWED BY: _____ ENGINEERING DATE

GRAND STRAND WATER AND SEWER AUTHORITY

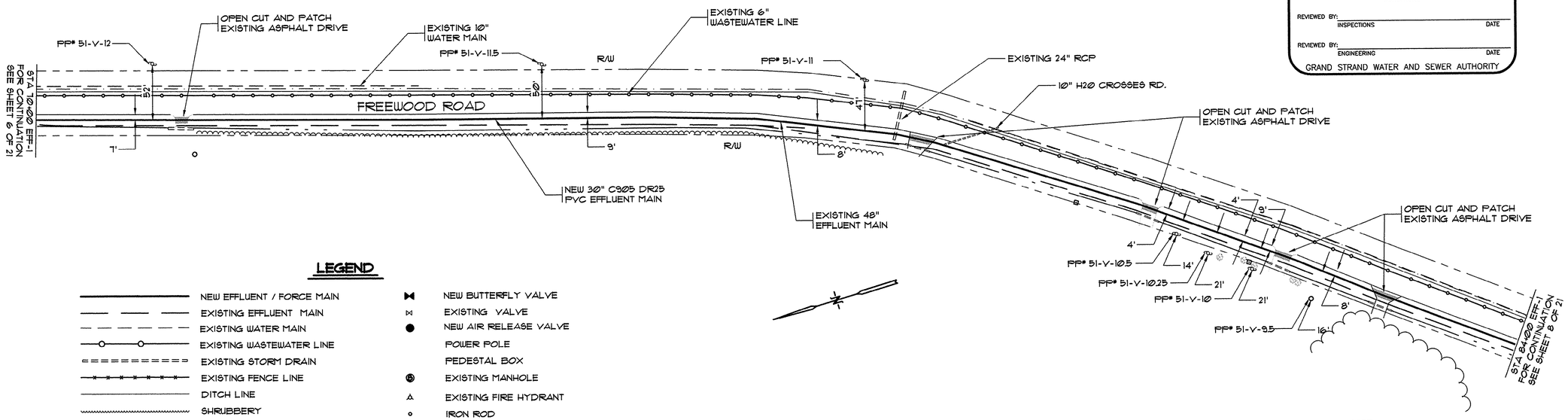

NOTE:
STA 82+00 TO 84+00
30" PIPE BEGAN TO CROSS
OVER 48" EFFLUENT

LEGEND

- NEW EFFLUENT / FORCE MAIN
- EXISTING EFFLUENT MAIN
- EXISTING WATER MAIN
- EXISTING WASTEWATER LINE
- EXISTING STORM DRAIN
- EXISTING FENCE LINE
- DITCH LINE
- SHRUBBERY
- TREE LINE
- RIGHT OF WAY
- NEW BUTTERFLY VALVE
- EXISTING VALVE
- NEW AIR RELEASE VALVE
- POWER POLE
- PEDESTAL BOX
- EXISTING MANHOLE
- EXISTING FIRE HYDRANT
- IRON ROD

EFFLUENT-MAIN-1

50' 0 25' 50' 100'

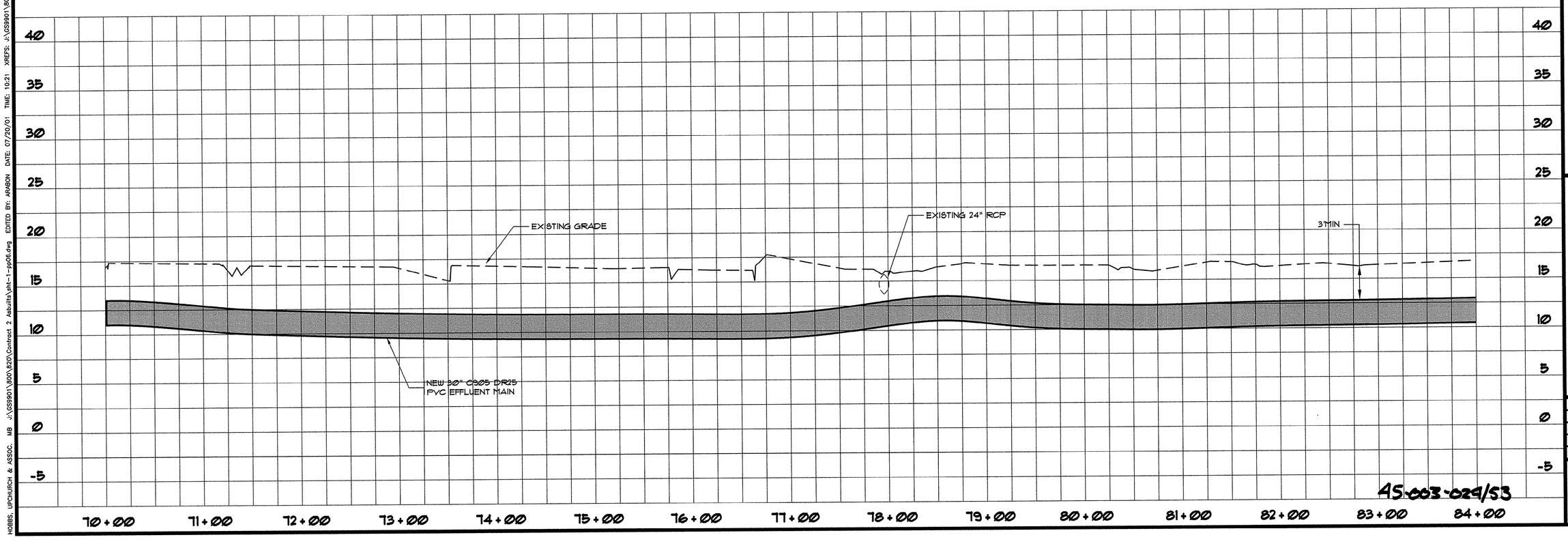

AS-003-029/53

REVISIONS

STM.	DESCRIPTION	DATE	BY
	ADDITIONAL OPEN CUT	9/7/99	KLM
	AND PATCH	12/6/00	ARM
	AS-BUILT	7/19/01	CAR
	AS-BUILT		

SOUTH CAROLINA PROFESSIONAL ENGINEER No. 12335 REGISTERED W. HUDSON MCDONALD

HOBBS, UPCHURCH & ASSOCIATES, P.A.
CONSULTING ENGINEERS
MYRTLE BEACH, SOUTH CAROLINA 29577

PLAN AND PROFILE
EFFLUENT MAIN 1

TIP-TOP TREE FARM
EFFLUENT LAND
APPLICATION PROJECT
GRAND STRAND WATER AND SEWER AUTHORITY

DATE:	MAR. 1999
DESIGNED:	WDL
DRAWN:	KLM
CHECKED:	WDL
SCALE:	AS SHOWN

SHEET NO.
EFF-7
OF: 21

HOBBS, UPCHURCH & ASSOC. MB J:\GS9901\800\820\Contract 2 Asbuilts\sht-1-pp06.dwg EDITED BY: ARABON DATE: 07/20/01 TIME: 10:21 XREFS: J:\GS9901\800\810\points.dwg Layout: Layout1

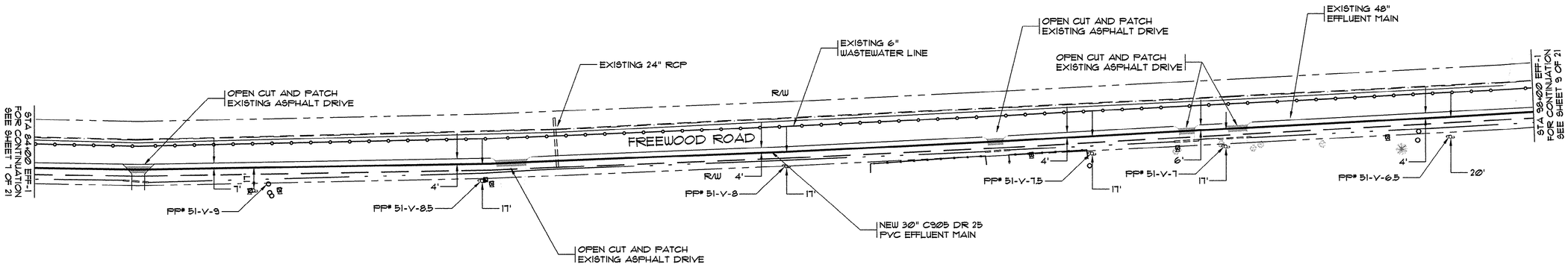

LEGEND

- NEW EFFLUENT / FORCE MAIN
- EXISTING EFFLUENT MAIN
- EXISTING WATER MAIN
- EXISTING WASTEWATER LINE
- EXISTING STORM DRAIN
- EXISTING FENCE LINE
- DITCH LINE
- SHRUBBERY
- TREE LINE
- RIGHT OF WAY
- NEW BUTTERFLY VALVE
- EXISTING VALVE
- NEW AIR RELEASE VALVE
- POWER POLE
- PEDESTAL BOX
- EXISTING MANHOLE
- EXISTING FIRE HYDRANT
- IRON ROD

THESE DRAWINGS REFLECT
AS-BUILT
CONDITIONS

REVIEWED BY: _____ INSPECTIONS DATE

REVIEWED BY: _____ ENGINEERING DATE

GRAND STRAND WATER AND SEWER AUTHORITY

EFFLUENT-MAIN-1

50' 0 25' 50' 100'

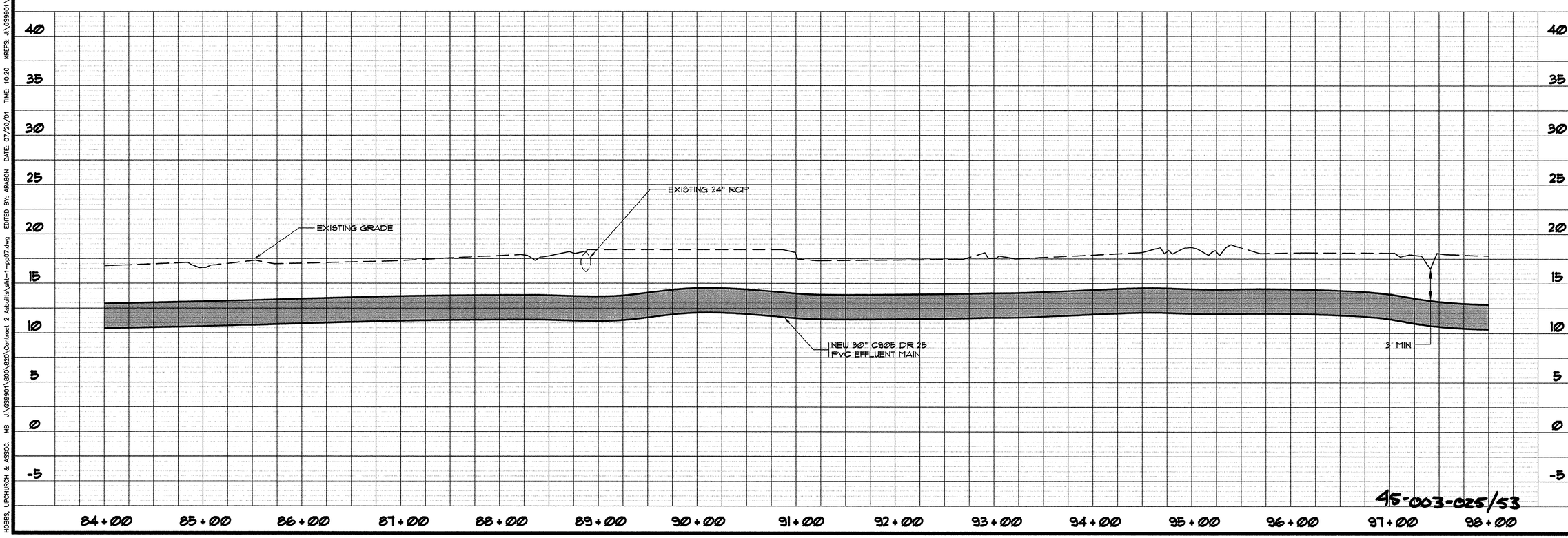

45-003-025/53

REVISIONS			
SYM.	DESCRIPTION	DATE	BY
	ADDITIONAL OPEN CUT AND PATCH	9/7/99	KLM
	AS-BUILT	12/6/00	ARM
	AS-BUILT	7/20/01	CAR

SOUTH CAROLINA PROFESSIONAL ENGINEER No. 12335 REGISTERED JASON M. MCCOLGAN

HOBBS, UPCHURCH & ASSOCIATES, P.A.
CONSULTING ENGINEERS
MYRTLE BEACH, SOUTH CAROLINA 29577

PLAN AND PROFILE EFFLUENT MAIN 1

TIP-TOP TREE FARM EFFLUENT LAND APPLICATION PROJECT

GRAND STRAND WATER AND SEWER AUTHORITY

DATE:	MAR. 1999
DESIGNED:	WDL
DRAWN:	KLM
CHECKED:	WDL
SCALE:	AS SHOWN

SHEET NO. EFF-8 OF: 21

HOBBS, UPCHURCH & ASSOC. MB J:\GS9901\800\820\Contract 2 Asbuilts\eff-1-pp07.dwg EDITED BY: ARABON DATE: 07/20/01 TIME: 10:20 XREFS: J:\GS9901\800\810\points.dwg Layout: Layout1

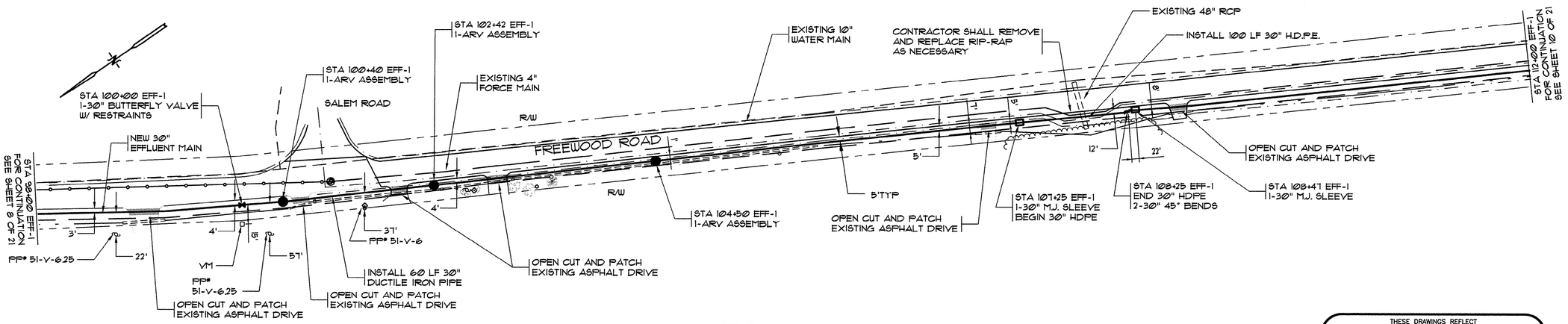

LEGEND

NEW EFFLUENT / FORCE MAIN	NEW BUTTERFLY VALVE
EXISTING EFFLUENT MAIN	EXISTING VALVE
EXISTING WATER MAIN	NEW AIR RELEASE VALVE
EXISTING WASTEWATER LINE	POWER POLE
EXISTING STORM DRAIN	PEDESTAL BOX
EXISTING FENCE LINE	EXISTING MANHOLE
DITCH LINE	EXISTING FIRE HYDRANT
SHRUBBERY	IRON ROD
TREE LINE	
RIGHT OF WAY	

THESE DRAWINGS REFLECT
AS-BUILT
CONDITIONS

REVIEWED BY: _____
INSPECTIONS DATE

REVIEWED BY: _____
ENGINEERING DATE

GRAND STRAND WATER AND SEWER AUTHORITY

EFFLUENT-MAIN-1

50' 0 25' 50' 100'

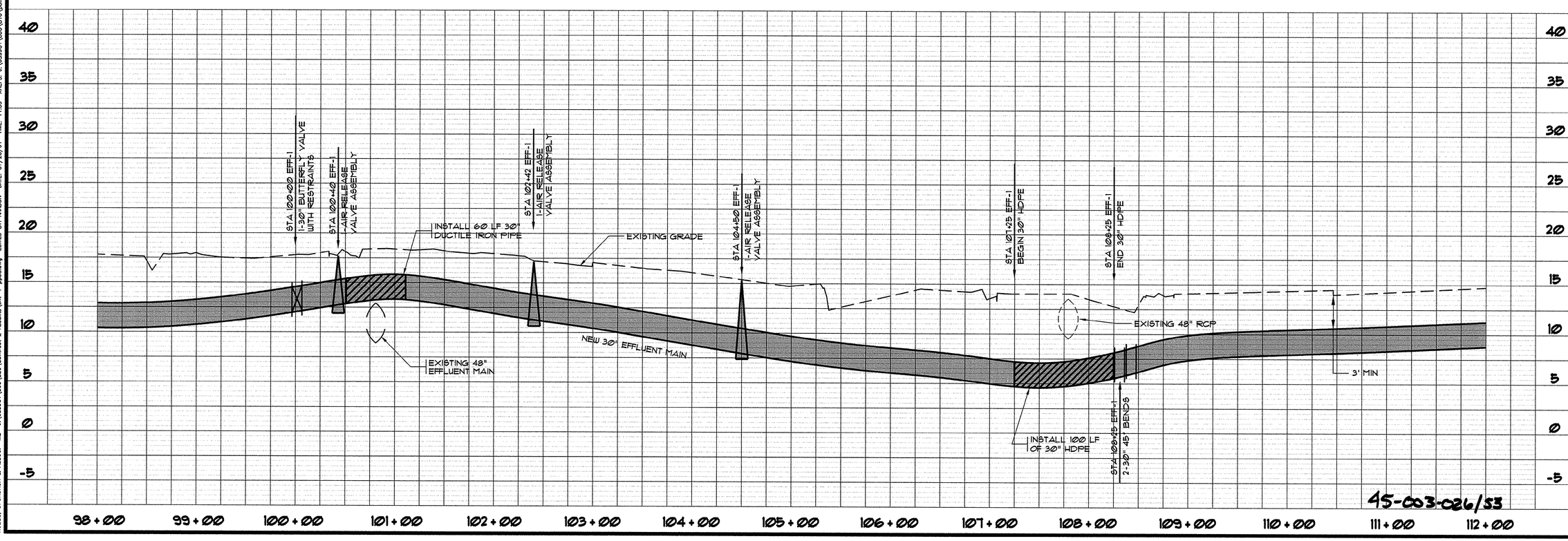

45-003-026/53

REVISIONS

STM.	DESCRIPTION	DATE	BY
	ADDITIONAL OPEN CUT AND PATCH	9/7/99	KLM
	AS-BUILT	7/20/01	CAR

SOUTH CAROLINA PROFESSIONAL ENGINEER No. 12335 REGISTERED JOSEPH M. MCCOLLUM

HOBBS, UPCHURCH & ASSOCIATES, P.A.
CONSULTING ENGINEERS
MYRTLE BEACH, SOUTH CAROLINA 29577

PLAN AND PROFILE
EFFLUENT MAIN 1

TIP-TOP TREE FARM
EFFLUENT LAND
APPLICATION PROJECT
GRAND STRAND WATER
AND SEWER AUTHORITY

DATE:	MAR. 1999
DESIGNED:	WDL
DRAWN:	KLM
CHECKED:	WDL
SCALE:	AS SHOWN

SHEET NO.
EFF-9
OF: 21

HOBBS, UPCHURCH & ASSOC. MB J:\GS9901\800\830\Contract 2 Astulla\pht-1-pp08.dwg EDITED BY: ARABON DATE: 07/20/01 TIME: 11:39 XREFS: J:\GS9901\800\810\points.dwg Layout: Layout1

THESE DRAWINGS REFLECT
AS-BUILT
CONDITIONS

REVIEWED BY: _____ INSPECTIONS DATE

REVIEWED BY: _____ ENGINEERING DATE

GRAND STRAND WATER AND SEWER AUTHORITY

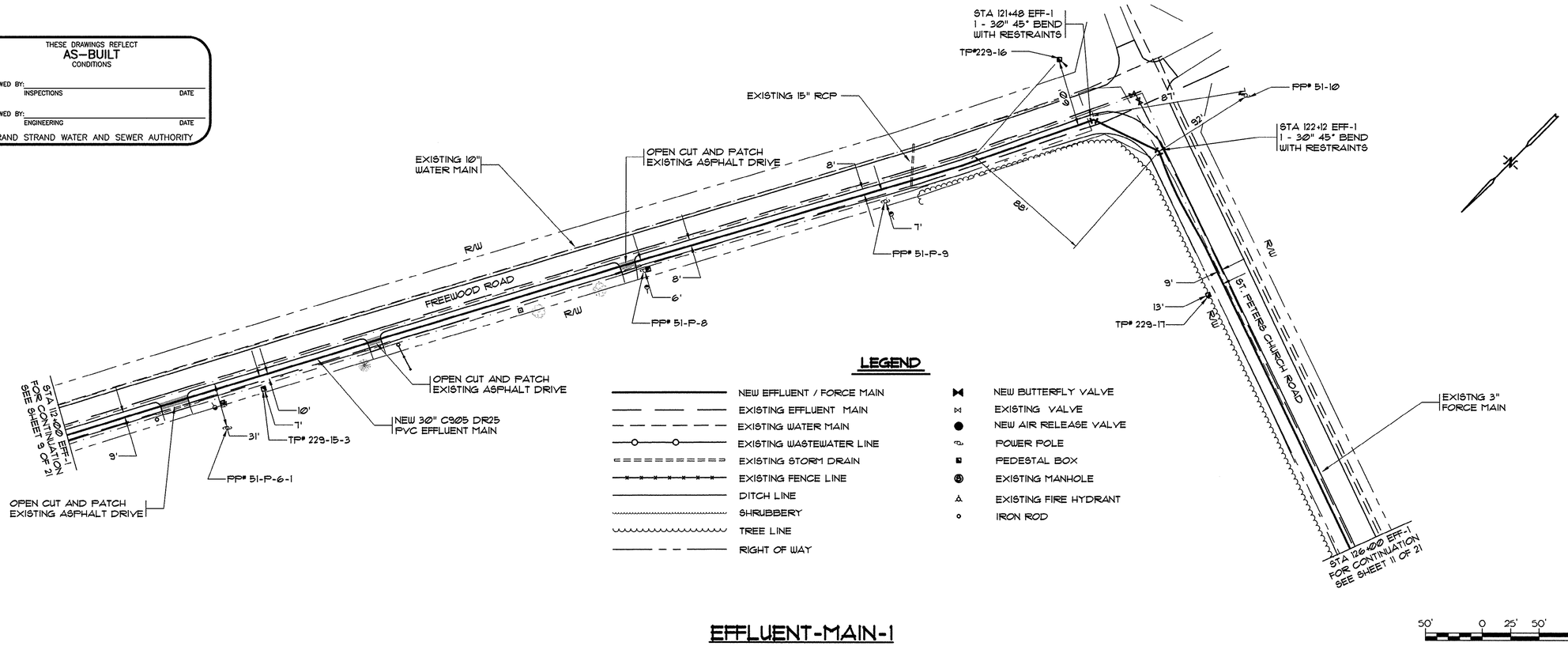

LEGEND

- NEW EFFLUENT / FORCE MAIN
- EXISTING EFFLUENT MAIN
- EXISTING WATER MAIN
- EXISTING WASTEWATER LINE
- EXISTING STORM DRAIN
- EXISTING FENCE LINE
- DITCH LINE
- SHRUBBERY
- TREE LINE
- RIGHT OF WAY
- NEW BUTTERFLY VALVE
- EXISTING VALVE
- NEW AIR RELEASE VALVE
- POWER POLE
- PEDESTAL BOX
- EXISTING MANHOLE
- EXISTING FIRE HYDRANT
- IRON ROD

50' 0 25' 50' 100'

EFFLUENT-MAIN-1

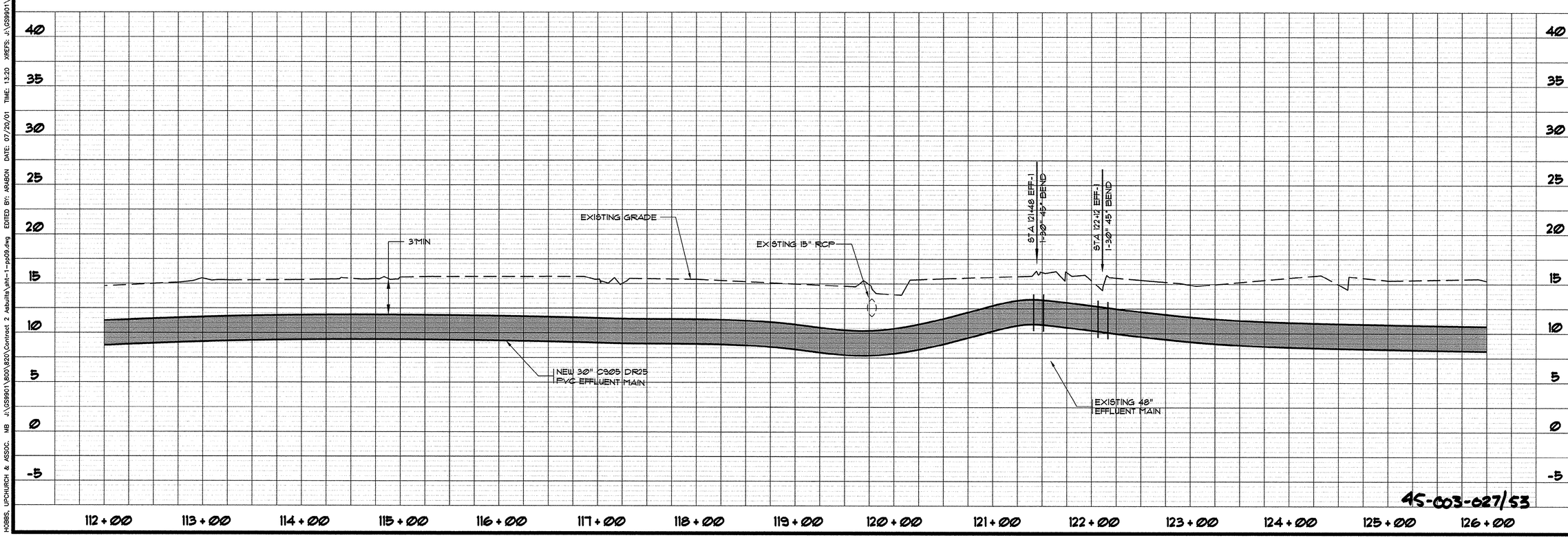

45-003-027/53

REVISIONS

SYM.	DESCRIPTION	DATE	BY
	ADDITIONAL OPEN CUT AND PATCH	9/7/99	KLM
	AS-BUILT	12/6/00	ARM
	AS-BUILT	7/20/01	CAR

SOUTH CAROLINA PROFESSIONAL ENGINEER REGISTERED No. 12339 JOSEPH M. MCCOLGAN

HOBBS, UPCHURCH & ASSOCIATES, P.A.
CONSULTING ENGINEERS
MYRTLE BEACH, SOUTH CAROLINA 29577

PLAN AND PROFILE
EFFLUENT MAIN 1

TIP-TOP TREE FARM
EFFLUENT LAND
APPLICATION PROJECT
GRAND STRAND WATER AND SEWER AUTHORITY

DATE:	MAR. 1999
DESIGNED:	WDL
DRAWN:	KLM
CHECKED:	WDL
SCALE:	AS SHOWN

SHEET NO. EFF-10
OF: 21

HOBBS, UPCHURCH & ASSOC. MB J:\GS9901\600\820\Contract 2 Asbuilts\pht-1-pp09.dwg EDITED BY: ARABON DATE: 07/20/01 TIME: 13:20 XREFS: J:\GS9901\800\810\points.dwg Layout: Layout1

LEGEND

- NEW EFFLUENT / FORCE MAIN
- EXISTING EFFLUENT MAIN
- EXISTING WATER MAIN
- EXISTING WASTEWATER LINE
- EXISTING STORM DRAIN
- EXISTING FENCE LINE
- DITCH LINE
- SHRUBBERY
- TREE LINE
- RIGHT OF WAY
- NEW BUTTERFLY VALVE
- EXISTING VALVE
- NEW AIR RELEASE VALVE
- POWER POLE
- PEDESTAL BOX
- EXISTING MANHOLE
- EXISTING FIRE HYDRANT
- IRON ROD

THESE DRAWINGS REFLECT
AS-BUILT
CONDITIONS

REVIEWED BY: _____ INSPECTIONS DATE

REVIEWED BY: _____ ENGINEERING DATE

GRAND STRAND WATER AND SEWER AUTHORITY

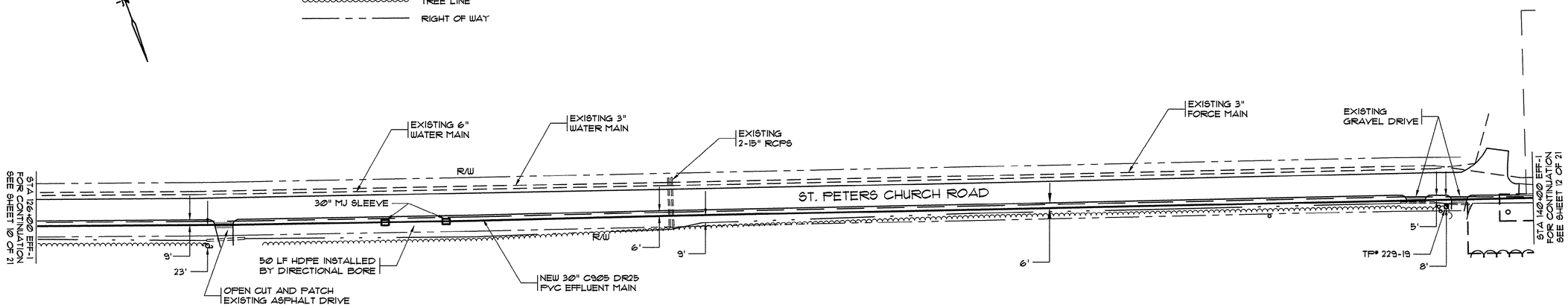

EFFLUENT-MAIN-1

50' 0 25' 50' 100'

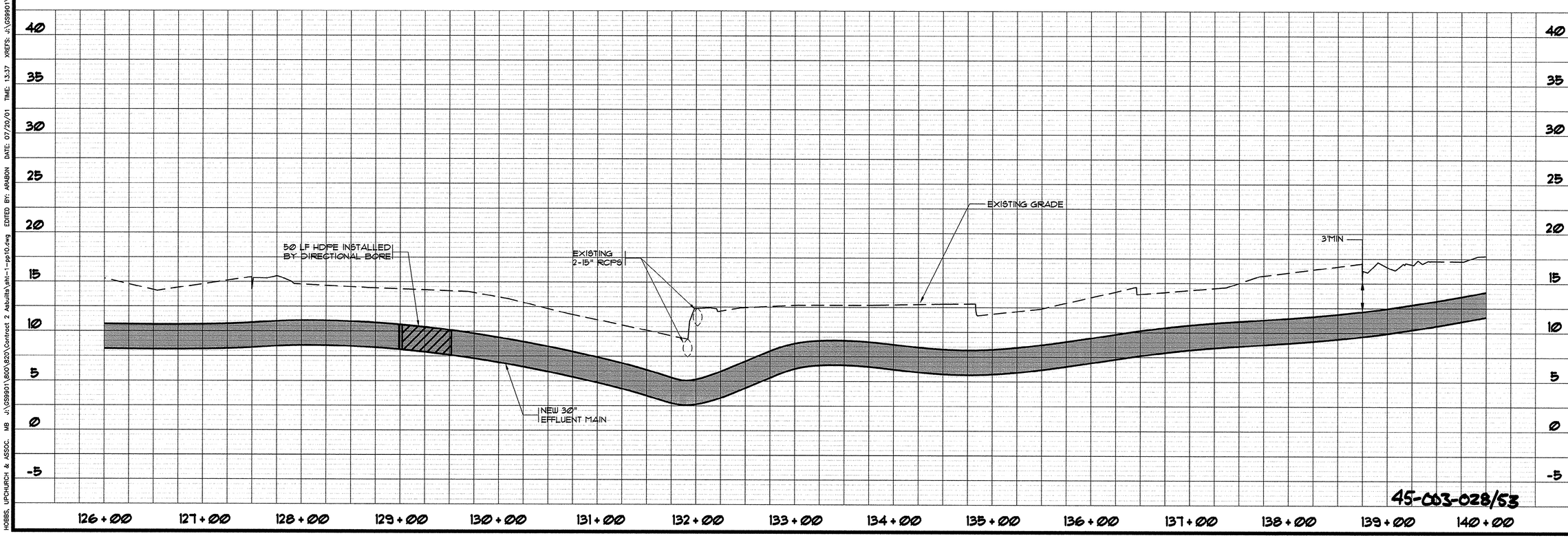

45-003-028/53

REVISIONS			
SYM.	DESCRIPTION	DATE	BY
	AS-BUILT	12/6/00	ARM
	AS-BUILT	7/20/01	CAR

SOUTH CAROLINA PROFESSIONAL ENGINEER No. 12335 REGISTERED JOSEPH W. HOBBS

HOBBS, UPCHURCH & ASSOCIATES, P.A.
CONSULTING ENGINEERS
MYRTLE BEACH, SOUTH CAROLINA 29577

PLAN AND PROFILE
EFFLUENT MAIN 1

TIP-TOP TREE FARM
EFFLUENT LAND
APPLICATION PROJECT
GRAND STRAND WATER AND SEWER AUTHORITY

DATE:	MAR. 1999
DESIGNED:	WDL
DRAWN:	KLM
CHECKED:	WDL
SCALE:	AS SHOWN

SHEET NO. EFF-11 OF: 21

HOBBS, UPCHURCH & ASSOC. MB J:\GS9901\800\820\Contract 2 Asbuilts\sht-1-pp10.dwg EDITED BY: ARABON DATE: 07/20/01 TIME: 13:37 XREFS: J:\GS9901\800\810\points.dwg Layout: Layout1

LEGEND

- NEW EFFLUENT / FORCE MAIN
- EXISTING EFFLUENT MAIN
- EXISTING WATER MAIN
- EXISTING WASTEWATER LINE
- EXISTING STORM DRAIN
- EXISTING FENCE LINE
- DITCH LINE
- SHRUBBERY
- TREE LINE
- RIGHT OF WAY
- NEW BUTTERFLY VALVE
- EXISTING VALVE
- NEW AIR RELEASE VALVE
- POWER POLE
- PEDESTAL BOX
- EXISTING MANHOLE
- EXISTING FIRE HYDRANT
- IRON ROD

THESE DRAWINGS REFLECT
AS-BUILT
CONDITIONS

REVIEWED BY: _____ INSPECTIONS DATE

REVIEWED BY: _____ ENGINEERING DATE

GRAND STRAND WATER AND SEWER AUTHORITY

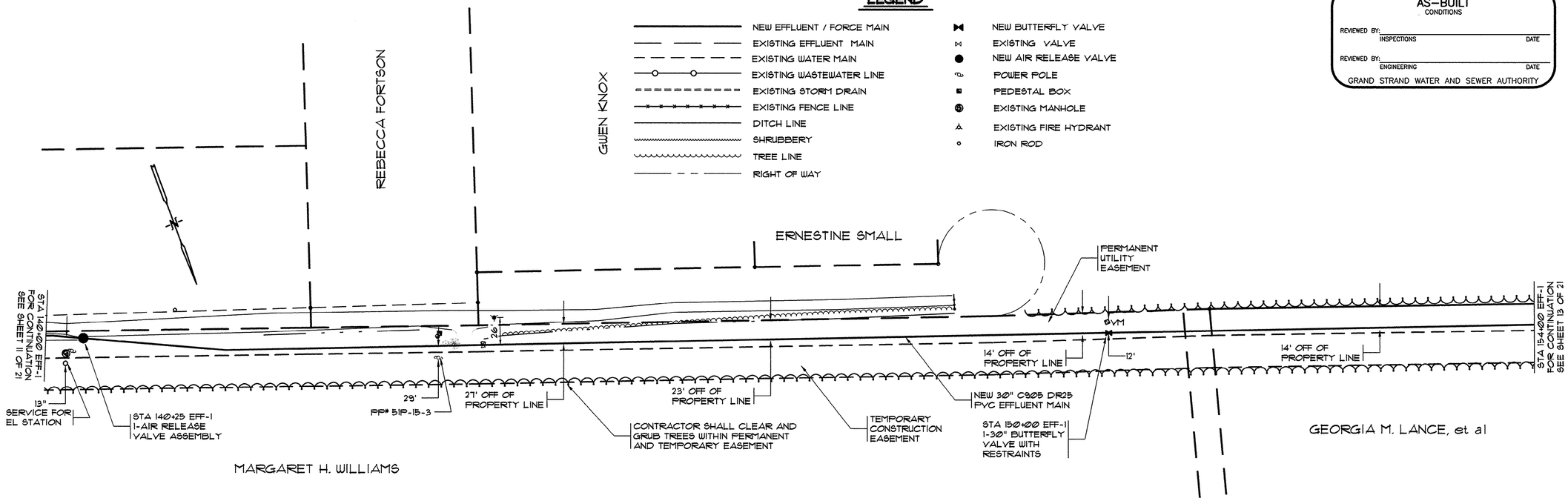

EFFLUENT-MAIN-1

50' 0 25' 50' 100'

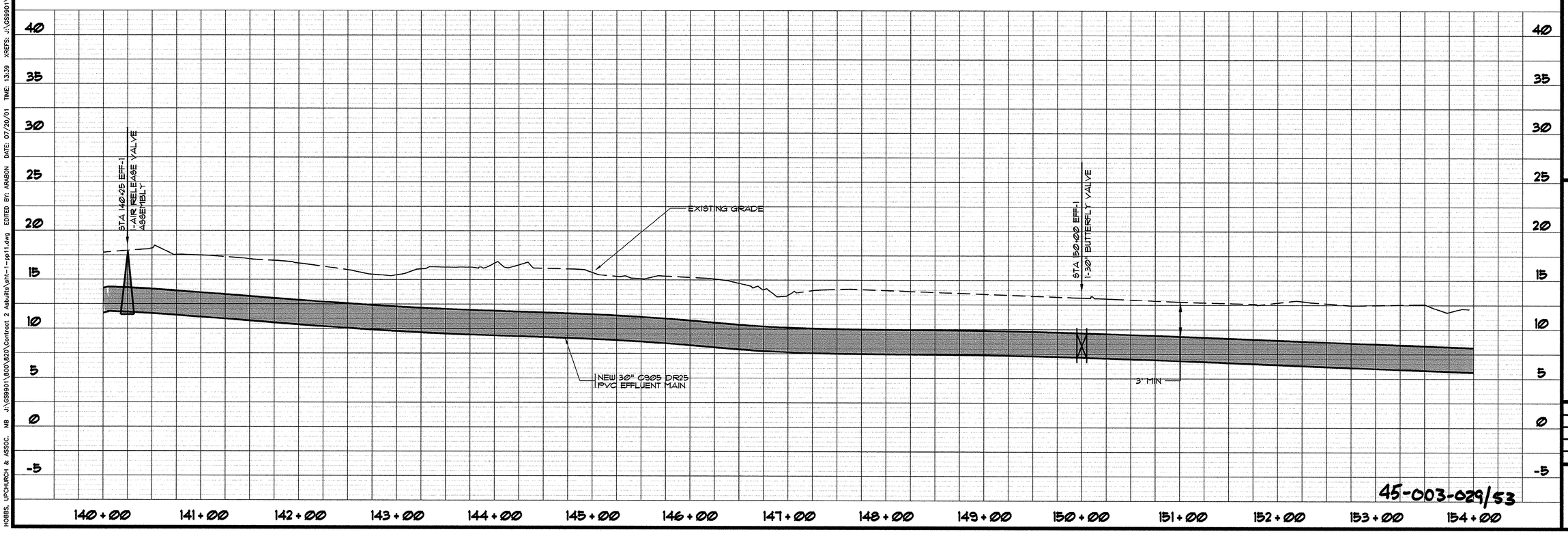

45-003-029/53

SYM.	DESCRIPTION	DATE	BY
	AS-BUILT	12/6/00	ARM
	AS-BUILT	7/20/01	CAR

REVISIONS

SOUTH CAROLINA REGISTERED PROFESSIONAL ENGINEER No. 12335 JOSEPH W. MCCORMAN

HOBBS, UPCHURCH & ASSOCIATES, P.A.
CONSULTING ENGINEERS
MYRTLE BEACH, SOUTH CAROLINA 29577

PLAN AND PROFILE EFFLUENT MAIN 1

TIP-TOP TREE FARM EFFLUENT LAND APPLICATION PROJECT

GRAND STRAND WATER AND SEWER AUTHORITY

DATE:	MAR. 1999
DESIGNED:	WDL
DRAWN:	KLM
CHECKED:	WDL
SCALE:	AS SHOWN

SHEET NO. EFF-12

OF: 21

HOBBS, UPCHURCH & ASSOC. MB J:\GS9901\800\820\Contract 2 Asbuilts\sht-1-pp11.dwg EDITED BY: ARABON DATE: 07/20/01 TIME: 13:39 XREFS: J:\GS9901\800\810\points.dwg Layout: Layout1

LEGEND

- NEW EFFLUENT / FORCE MAIN
- EXISTING EFFLUENT MAIN
- EXISTING WATER MAIN
- EXISTING WASTEWATER LINE
- EXISTING STORM DRAIN
- EXISTING FENCE LINE
- DITCH LINE
- SHRUBBERY
- TREE LINE
- RIGHT OF WAY
- NEW BUTTERFLY VALVE
- EXISTING VALVE
- NEW AIR RELEASE VALVE
- POWER POLE
- PEDESTAL BOX
- EXISTING MANHOLE
- EXISTING FIRE HYDRANT
- IRON ROD

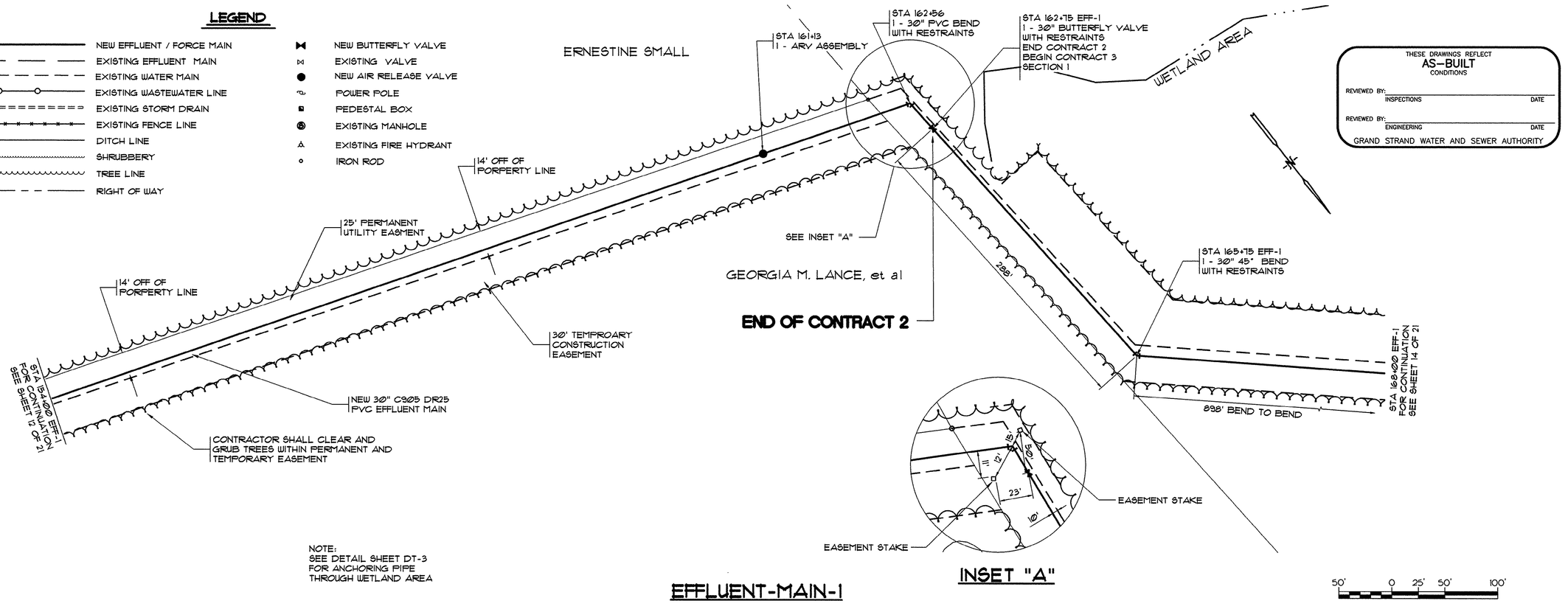

NOTE:
SEE DETAIL SHEET DT-3
FOR ANCHORING PIPE
THROUGH WETLAND AREA

EFFLUENT-MAIN-1

INSET "A"

THESE DRAWINGS REFLECT
AS-BUILT
CONDITIONS

REVIEWED BY: _____
INSPECTIONS DATE

REVIEWED BY: _____
ENGINEERING DATE

GRAND STRAND WATER AND SEWER AUTHORITY

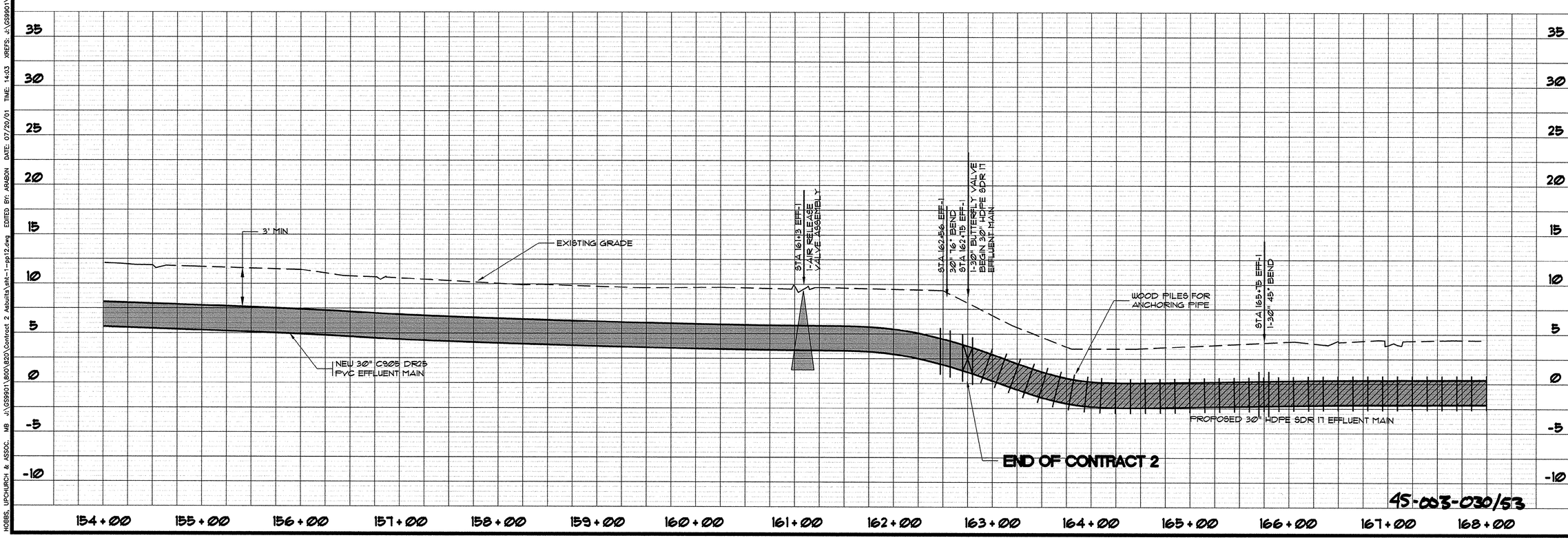

REVISIONS			
SYM.	DESCRIPTION	DATE	BY
	PIPE ANCHORING NOTE	9/8/99	KLM
	AS-BUILT	12/6/00	ARM
	AS-BUILT	7/20/01	CAR

SOUTH CAROLINA PROFESSIONAL ENGINEER No. 12339 REGISTERED JOSEPH W. MCCORMAN

HOBBS, UPCHURCH & ASSOCIATES, P.A.
CONSULTING ENGINEERS
MYRTLE BEACH, SOUTH CAROLINA 29577

PLAN AND PROFILE
EFFLUENT MAIN 1

TIP-TOP TREE FARM
EFFLUENT LAND
APPLICATION PROJECT
GRAND STRAND WATER
AND SEWER AUTHORITY

DATE:	MAR. 1999
DESIGNED:	WDL
DRAWN:	KLM
CHECKED:	WDL
SCALE:	AS SHOWN

SHEET NO.
EFF-13
OF: 21

HOBBS, UPCHURCH & ASSOC. MB J:\GS9901\800\820\Contract 2 Asbuilts\sht-1-pp12.dwg EDITED BY: ARABON DATE: 07/20/01 TIME: 14:03 XREFS: J:\GS9901\800\810\points.dwg Layout: Layout1

NOTE:
THE CONTRACTOR SHALL INSTALL THE PROPOSED 6" SLUDGE LINE ALONG WITH THE 30" EFFLUENT MAIN AS SHOWN IN THE TRENCH DETAIL AND/OR AS INDICATED ON THE PLANS.

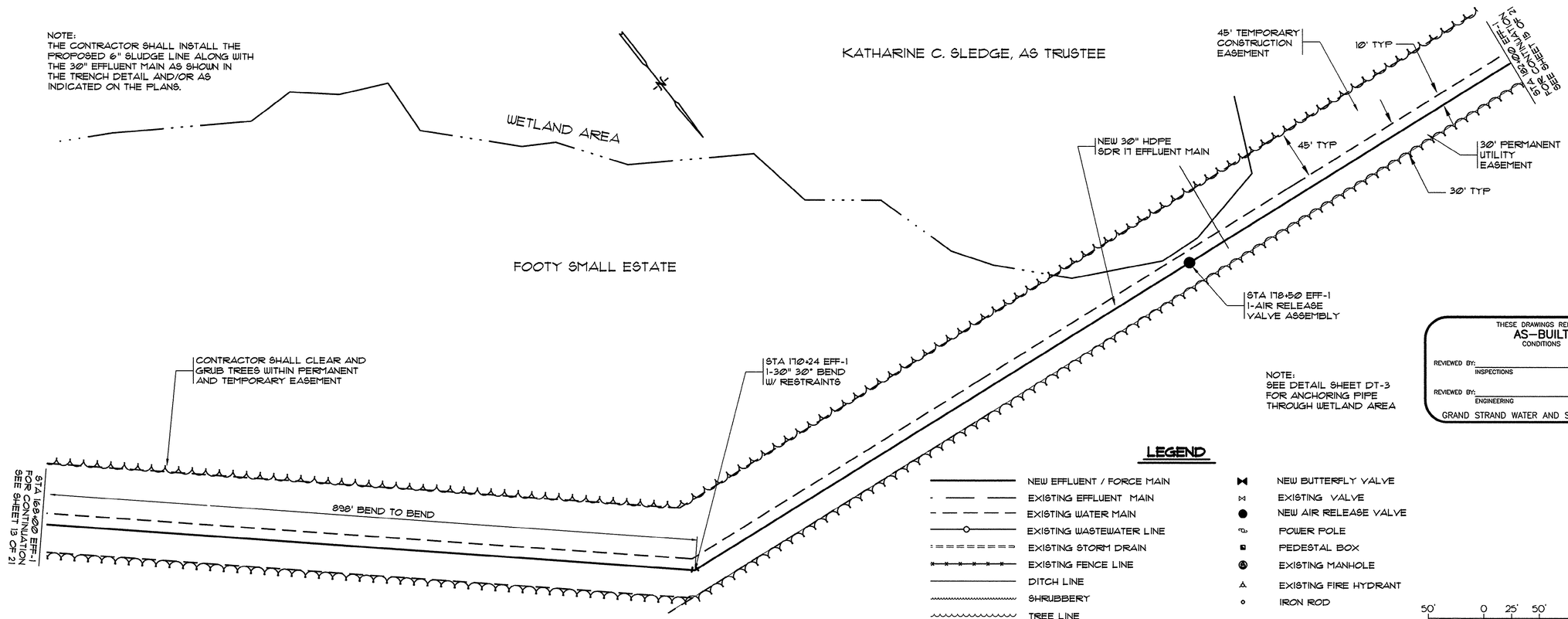

NOTE:
SEE DETAIL SHEET DT-3 FOR ANCHORING PIPE THROUGH WETLAND AREA

THESE DRAWINGS REFLECT
AS-BUILT
CONDITIONS

REVIEWED BY: _____
INSPECTIONS DATE

REVIEWED BY: _____
ENGINEERING DATE

GRAND STRAND WATER AND SEWER AUTHORITY

LEGEND

- NEW EFFLUENT / FORCE MAIN
- EXISTING EFFLUENT MAIN
- EXISTING WATER MAIN
- EXISTING WASTEWATER LINE
- EXISTING STORM DRAIN
- EXISTING FENCE LINE
- DITCH LINE
- SHRUBBERY
- TREE LINE
- RIGHT OF WAY
- NEW BUTTERFLY VALVE
- EXISTING VALVE
- NEW AIR RELEASE VALVE
- POWER POLE
- PEDESTAL BOX
- EXISTING MANHOLE
- EXISTING FIRE HYDRANT
- IRON ROD

50' 0 25' 50' 100'

EFFLUENT-MAIN-1

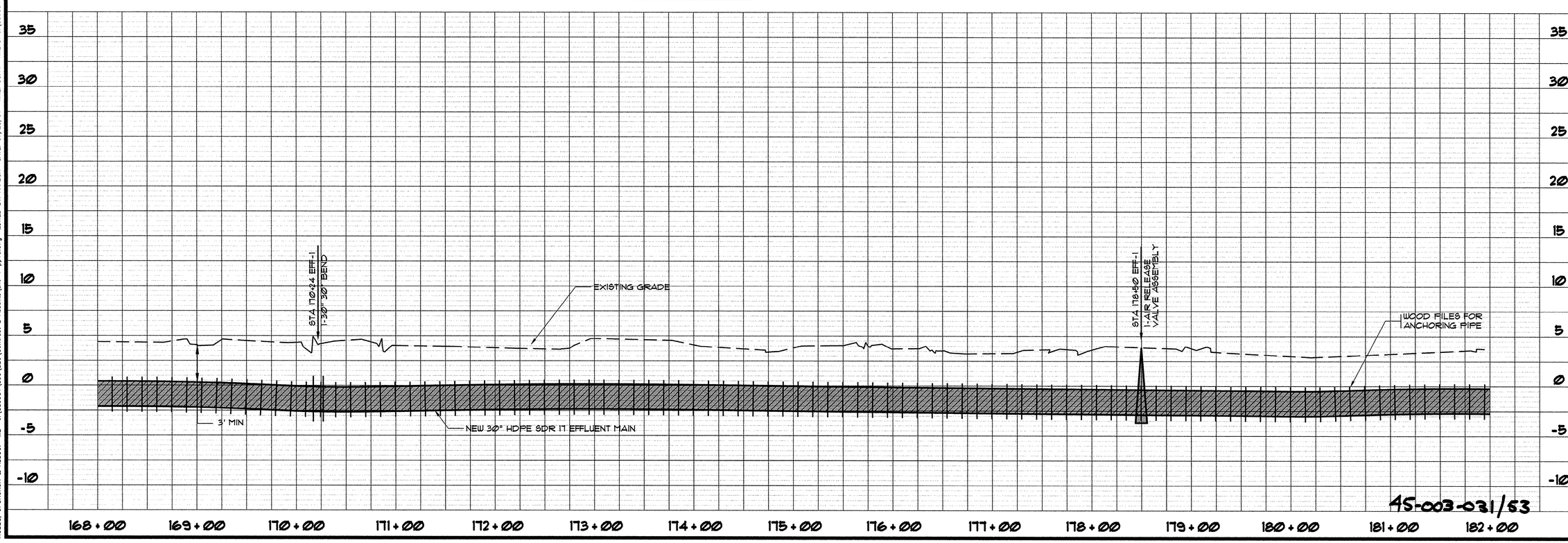

45-003-031/53

SYM.	DESCRIPTION	DATE	BY
	PIPE ANCHORING NOTE	9/8/99	KLM
	AS-BUILT	7/20/01	CAR

REVISIONS

SOUTH CAROLINA PROFESSIONAL ENGINEER REGISTERED No. 12335 JOSEPH W. HOBBS

HOBBS, UPCHURCH & ASSOCIATES, P.A.
CONSULTING ENGINEERS
MYRTLE BEACH, SOUTH CAROLINA 29577

PLAN AND PROFILE EFFLUENT MAIN 1

TIP-TOP TREE FARM EFFLUENT LAND APPLICATION PROJECT

GRAND STRAND WATER AND SEWER AUTHORITY

DATE:	MAR. 1999
DESIGNED:	WDL
DRAWN:	KLM
CHECKED:	WDL
SCALE:	AS SHOWN

SHEET NO.
EFF-14
OF: 21

HOBBS, UPCHURCH & ASSOC. MB J:\GS9901\800\820\Contract 2 Asbuilts\eht-1-pp13.dwg EDITED BY: ARABON DATE: 07/23/01 TIME: 08:41 XREFS: J:\GS9901\800\810\points.dwg Layout: Layout1

THESE DRAWINGS REFLECT
AS-BUILT
CONDITIONS

REVIEWED BY: _____ INSPECTIONS DATE

REVIEWED BY: _____ ENGINEERING DATE

GRAND STRAND WATER AND SEWER AUTHORITY

NOTE:
THE CONTRACTOR SHALL INSTALL THE PROPOSED 6" SLUDGE LINE ALONG WITH THE 30" EFFLUENT MAIN AS SHOWN IN THE TRENCH DETAIL AND/OR AS INDICATED ON THE PLANS.

KATHARINE C. SLEDGE, AS TRUSTEE

45' TEMPORARY CONSTRUCTION EASEMENT

CONTRACTOR SHALL CLEAR AND GRUB TREES WITHIN PERMANENT AND TEMPORARY EASEMENT

STA 182+00 EFF-1 FOR CONTINUATION SEE SHEET 14 OF 21

45' TYP

10' TYP

20' TYP

STA 196+00 EFF-1 FOR CONTINUATION SEE SHEET 16 OF 21

30' PERMANENT UTILITY EASEMENT

NEW 30" HDPE SDR 17 EFFLUENT MAIN

FOOTY SMALL ESTATE

NOTE:
SEE DETAIL SHEET DT-3 FOR ANCHORING PIPE THOUGH WETLAND AREA

LEGEND

- NEW EFFLUENT / FORCE MAIN
- EXISTING EFFLUENT MAIN
- EXISTING WATER MAIN
- EXISTING WASTEWATER LINE
- EXISTING STORM DRAIN
- EXISTING FENCE LINE
- DITCH LINE
- SHRUBBERY
- TREE LINE
- RIGHT OF WAY
- NEW BUTTERFLY VALVE
- EXISTING VALVE
- NEW AIR RELEASE VALVE
- POWER POLE
- PEDESTAL BOX
- EXISTING MANHOLE
- EXISTING FIRE HYDRANT
- IRON ROD

EFFLUENT-MAIN-1

50' 0 25' 50' 100'

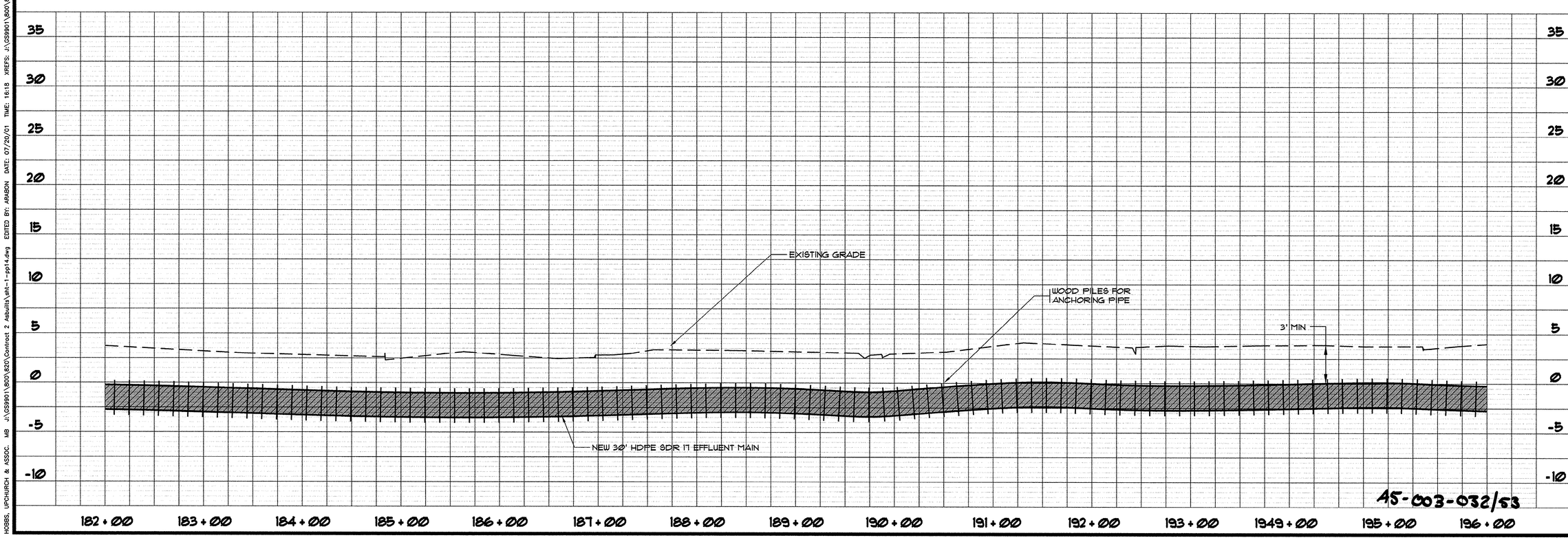

45-003-032/53

REVISIONS			
SYM.	DESCRIPTION	DATE	BY
	PIPE ANCHORING NOTE	9/8/99	KLM
	AS-BUILT	7/20/01	CAR

SOUTH CAROLINA PROFESSIONAL ENGINEER REGISTERED No. 12335 W. HODGSON HADSON

HOBBS, UPCHURCH & ASSOCIATES, P.A.
CONSULTING ENGINEERS
MYRTLE BEACH, SOUTH CAROLINA 29577

PLAN AND PROFILE EFFLUENT MAIN 1

TIP-TOP TREE FARM EFFLUENT LAND APPLICATION PROJECT

GRAND STRAND WATER AND SEWER AUTHORITY

DATE:	MAR. 1999
DESIGNED:	WDL
DRAWN:	KLM
CHECKED:	WDL
SCALE:	AS SHOWN

SHEET NO.
EFF-15
OF: 21

HOBBS, UPCHURCH & ASSOC. MB J:\GS9901\800\820\Contract 2 Asbuilts\eff-1-pp14.dwg EDITED BY: APABON DATE: 07/20/01 TIME: 16:18 XREFS: J:\GS9901\800\810\points.dwg Layout: Layout1

NOTE:
THE CONTRACTOR SHALL INSTALL THE PROPOSED 6" SLUDGE LINE ALONG WITH THE 30" EFFLUENT MAIN AS SHOWN IN THE TRENCH DETAIL AND/OR AS INDICATED ON THE PLANS.

KATHARINE SLEDGE, AS TRUSTEE

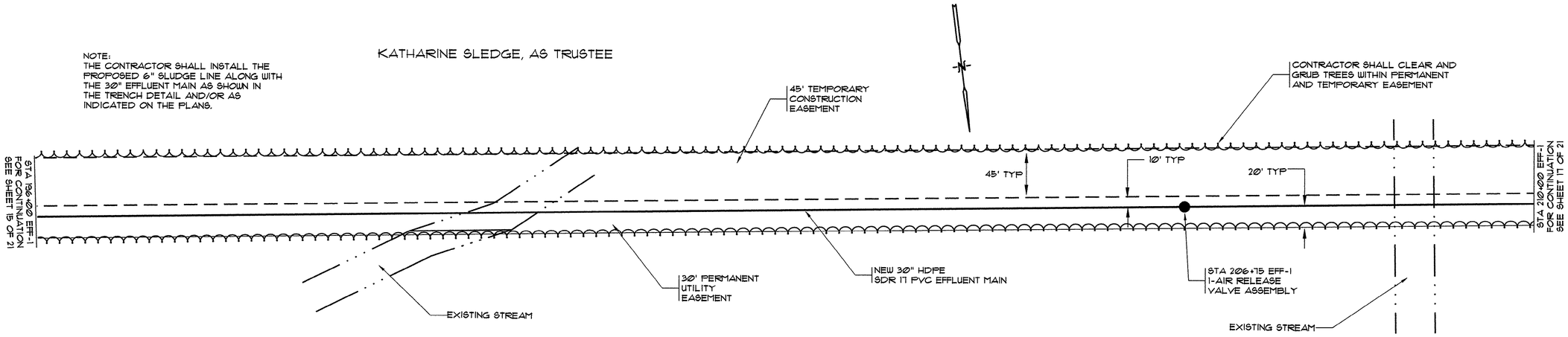

NOTE:
SEE DETAIL SHEET DT-3 FOR ANCHORING PIPE THROUGH WETLAND AREA

THESE DRAWINGS REFLECT
AS-BUILT
CONDITIONS

REVIEWED BY: _____
INSPECTIONS DATE

REVIEWED BY: _____
ENGINEERING DATE

GRAND STRAND WATER AND SEWER AUTHORITY

FOOTY SMALL ESTATE

LEGEND

- NEW EFFLUENT / FORCE MAIN
- EXISTING EFFLUENT MAIN
- EXISTING WATER MAIN
- EXISTING WASTEWATER LINE
- EXISTING STORM DRAIN
- EXISTING FENCE LINE
- DITCH LINE
- SHRUBBERY
- TREE LINE
- RIGHT OF WAY
- NEW BUTTERFLY VALVE
- EXISTING VALVE
- NEW AIR RELEASE VALVE
- POWER POLE
- PEDESTAL BOX
- EXISTING MANHOLE
- EXISTING FIRE HYDRANT
- IRON ROD

EFFLUENT-MAIN-1

50' 0 25' 50' 100'

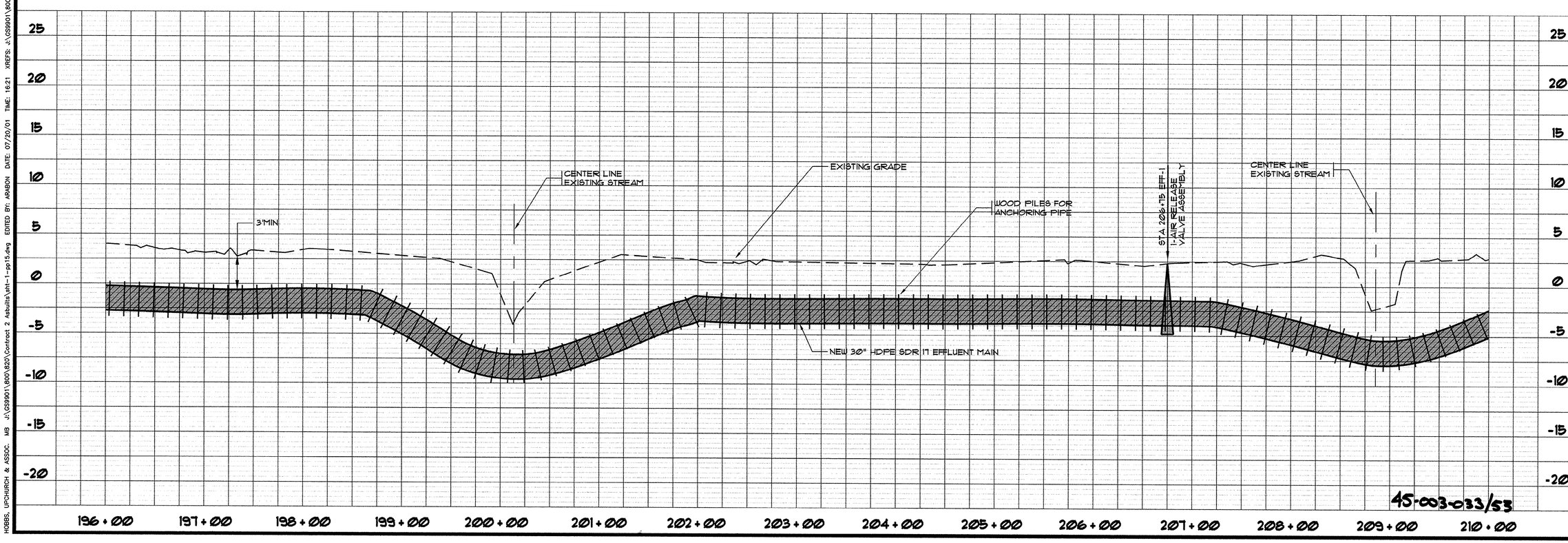

REVISIONS

SYM.	DESCRIPTION	DATE	BY
	PIPE ANCHORING NOTE	9/8/99	KLM
	AS-BUILT	7/20/01	CAR

SOUTH CAROLINA PROFESSIONAL ENGINEER No. 12335 REGISTERED W. MCCOY HOBBS

HOBBS, UPCHURCH & ASSOCIATES, P.A.
CONSULTING ENGINEERS
MYRTLE BEACH, SOUTH CAROLINA 29577

PLAN AND PROFILE EFFLUENT MAIN 1

TIP-TOP TREE FARM EFFLUENT LAND APPLICATION PROJECT

GRAND STRAND WATER AND SEWER AUTHORITY

DATE:	MAR. 1999
DESIGNED:	WDL
DRAWN:	KLM
CHECKED:	WDL
SCALE:	AS SHOWN

SHEET NO.
EFF-16
OF: 21

HOBBS, UPCHURCH & ASSOC. MB J:\GS9901\800\820\Contract 2 Asbuilts\ahl-1-pp15.dwg EDITED BY: ARABON DATE: 07/20/01 TIME: 16:21 XREFS: J:\GS9901\800\810\points.dwg Layout: Layout1

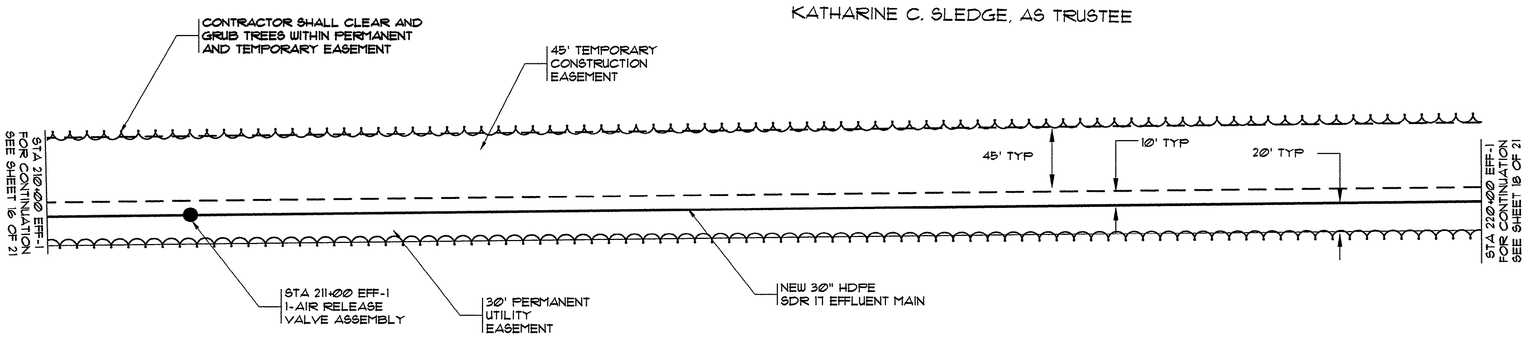

NOTE:
SEE DETAIL SHEET DT-3 FOR ANCHORING PIPE THOUGH WETLAND AREA

THESE DRAWINGS REFLECT
AS-BUILT
CONDITIONS

REVIEWED BY: _____ INSPECTIONS DATE

REVIEWED BY: _____ ENGINEERING DATE

GRAND STRAND WATER AND SEWER AUTHORITY

LEGEND

- NEW EFFLUENT / FORCE MAIN
- EXISTING EFFLUENT MAIN
- EXISTING WATER MAIN
- EXISTING WASTEWATER LINE
- EXISTING STORM DRAIN
- EXISTING FENCE LINE
- DITCH LINE
- SHRUBBERY
- TREE LINE
- RIGHT OF WAY
- NEW BUTTERFLY VALVE
- EXISTING VALVE
- NEW AIR RELEASE VALVE
- POWER POLE
- PEDESTAL BOX
- EXISTING MANHOLE
- EXISTING FIRE HYDRANT
- IRON ROD

NOTE:
THE CONTRACTOR SHALL INSTALL THE PROPOSED 6" SLUDGE LINE ALONG WITH THE 30" EFFLUENT MAIN AS SHOWN IN THE TRENCH DETAIL AND/OR AS INDICATED ON THE PLANS.

EFFLUENT-MAIN-1

50' 0 25' 50' 100'

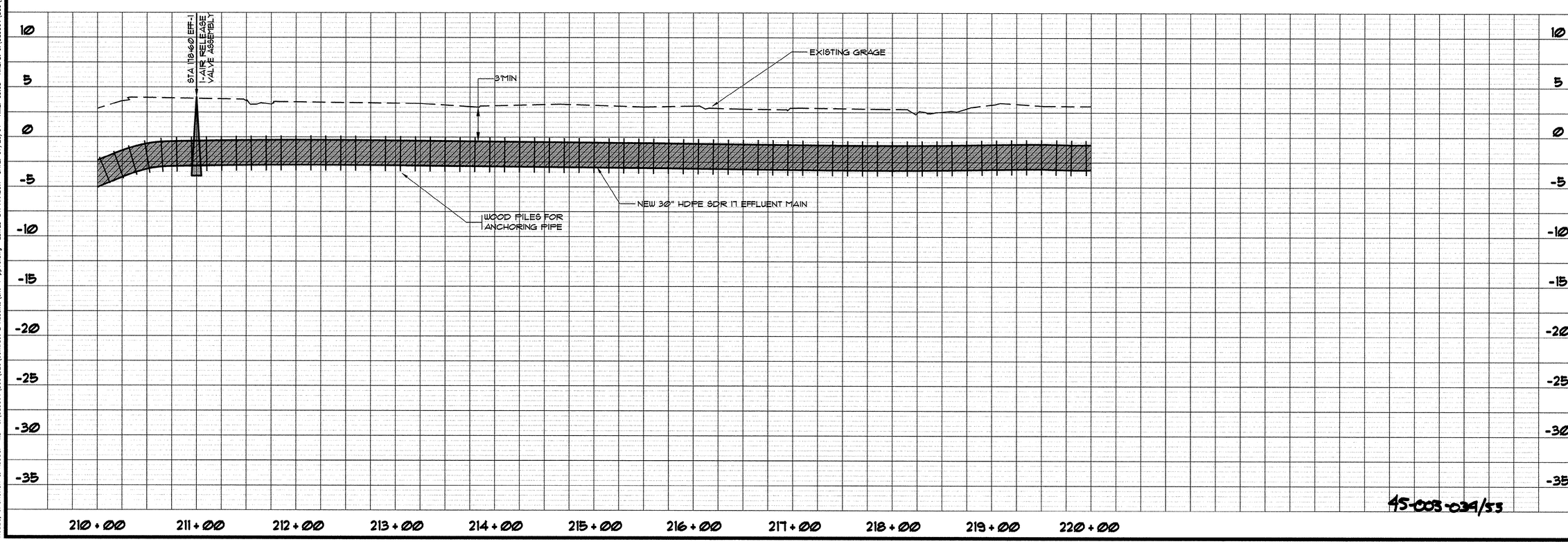

45-003-039/53

REVISIONS			
STM.	DESCRIPTION	DATE	BY
	PIPE ANCHORING NOTE	9/8/99	KLM
	AS-BUILT	7/20/01	CAR

SOUTH CAROLINA PROFESSIONAL ENGINEER REGISTERED No. 12335 W. JOSEPH MCCLOSKEY

HOBBS, UPCHURCH & ASSOCIATES, P.A.
CONSULTING ENGINEERS
MYRTLE BEACH, SOUTH CAROLINA 29577

PLAN AND PROFILE
EFFLUENT MAIN 1

TIP-TOP TREE FARM
EFFLUENT LAND
APPLICATION PROJECT
GRAND STRAND WATER AND SEWER AUTHORITY

DATE:	MAR. 1999
DESIGNED:	WDL
DRAWN:	KLM
CHECKED:	WDL
SCALE:	AS SHOWN

SHEET NO. EFF-17
OF: 21

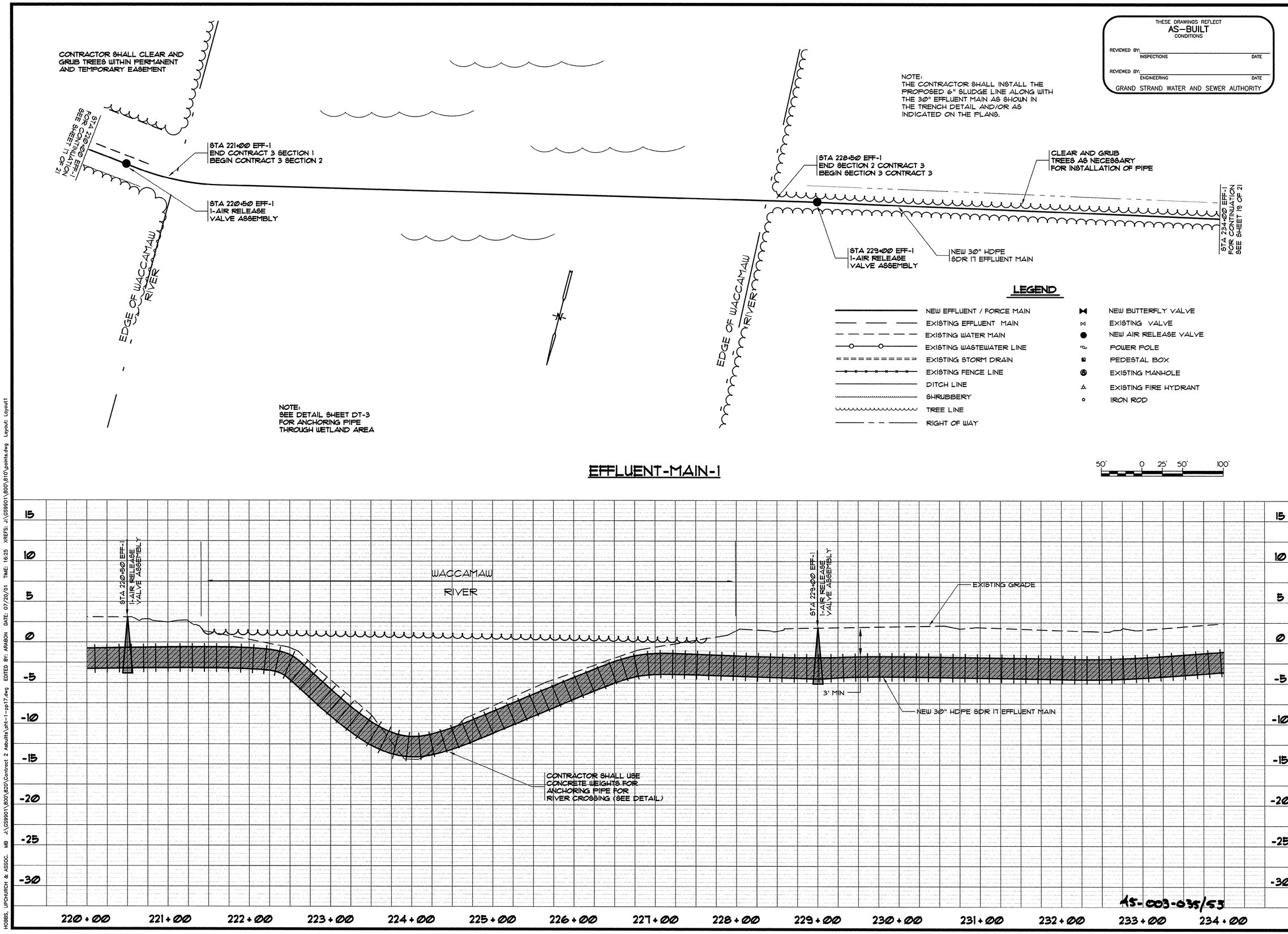

THESE DRAWINGS REFLECT
AS-BUILT
CONDITIONS

REVIEWED BY: _____ INSPECTIONS DATE

REVIEWED BY: _____ ENGINEERING DATE

GRAND STRAND WATER AND SEWER AUTHORITY

REVISIONS

SYM.	DESCRIPTION	DATE	BY
	PIPE ANCHORING NOTE	9/8/99	KLM
	BUTTERFLY VALVES DELETED	9/20/98	KLM
	AS-BUILT	7/20/01	CAR

SOUTH CAROLINA PROFESSIONAL ENGINEER No. 12335 REGISTERED JOSEPH W. MCDONOUGH

HOBBS, UPCHURCH & ASSOCIATES, P.A.
CONSULTING ENGINEERS
MYRTLE BEACH, SOUTH CAROLINA 29577

PLAN AND PROFILE
EFFLUENT MAIN 1

TIP-TOP TREE FARM EFFLUENT LAND APPLICATION PROJECT
GRAND STRAND WATER AND SEWER AUTHORITY

DATE:	MAR. 1999
DESIGNED:	WDL
DRAWN:	KLM
CHECKED:	WDL
SCALE:	AS SHOWN

SHEET NO.
EFF-18
OF: 21

HOBBS, UPCHURCH & ASSOC. MB J:\GS9901\800\820\Contract 2 Asbuilts\aht-1-pp17.dwg EDITED BY: ARABON DATE: 07/20/01 TIME: 16:25 XREFS: J:\GS9901\800\810\points.dwg Layout: Layout1

THESE DRAWINGS REFLECT
AS-BUILT
CONDITIONS

REVIEWED BY: _____
INSPECTIONS DATE

REVIEWED BY: _____
ENGINEERING DATE

GRAND STRAND WATER AND SEWER AUTHORITY

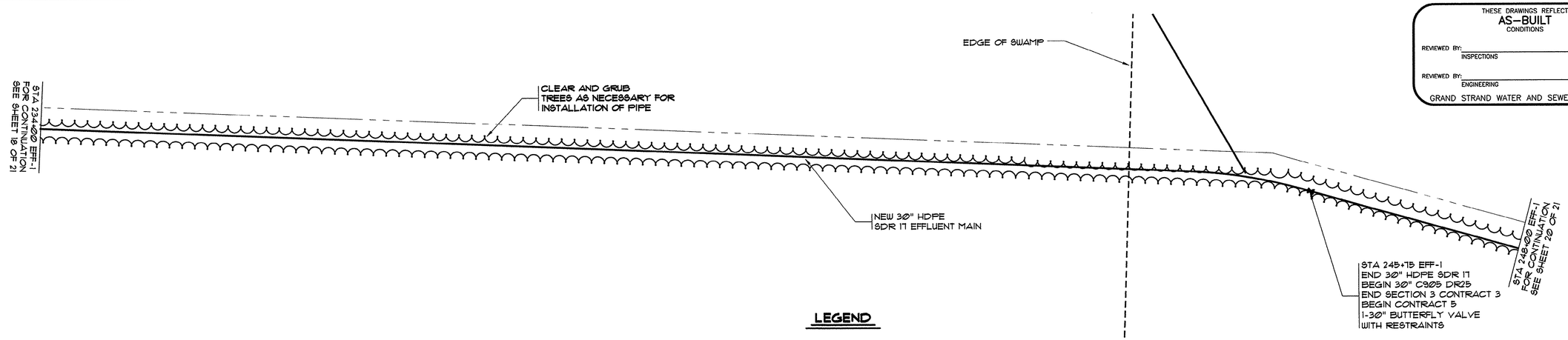

NOTE:
SEE DETAIL SHEET DT-3
FOR ANCHORING PIPE
THROUGH WETLAND AREA

LEGEND

- NEW EFFLUENT / FORCE MAIN
- EXISTING EFFLUENT MAIN
- EXISTING WATER MAIN
- EXISTING WASTEWATER LINE
- EXISTING STORM DRAIN
- EXISTING FENCE LINE
- DITCH LINE
- SHRUBBERY
- TREE LINE
- RIGHT OF WAY
- NEW BUTTERFLY VALVE
- EXISTING VALVE
- NEW AIR RELEASE VALVE
- POWER POLE
- PEDESTAL BOX
- EXISTING MANHOLE
- EXISTING FIRE HYDRANT
- IRON ROD

NOTE:
THE CONTRACTOR SHALL INSTALL THE
PROPOSED 6" SLUDGE LINE ALONG WITH
THE 30" EFFLUENT MAIN AS SHOWN IN
THE TRENCH DETAIL AND/OR AS
INDICATED ON THE PLANS.

EFFLUENT-MAIN-1

50' 0 25' 50' 100'

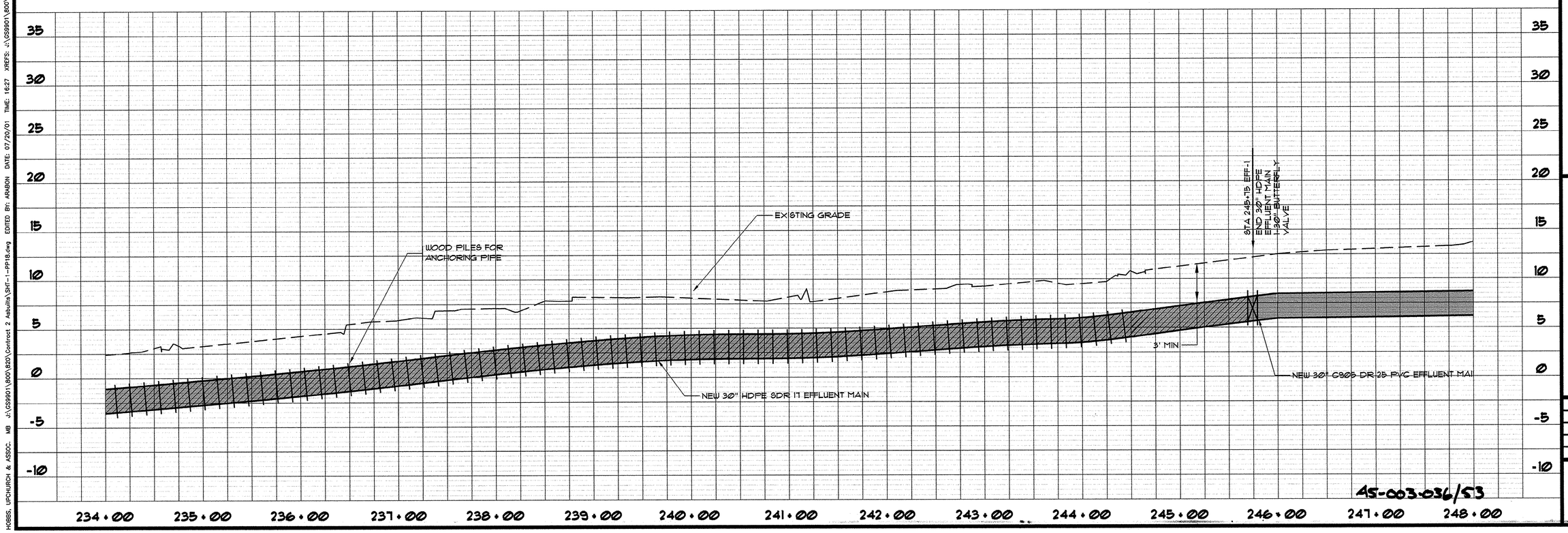

45-003-036/53

REVISIONS			
SYM.	DESCRIPTION	DATE	BY
	PIPE ANCHORING NOTE	9/8/99	KLM
	CONTRACT SECTION CHANGES	9/20/99	KLM
	AS-BUILT	7/20/01	CAR

SOUTH CAROLINA PROFESSIONAL ENGINEER REGISTERED No. 12335 JOSEPH W. HOBBS

HOBBS, UPCHURCH & ASSOCIATES, P.A.
CONSULTING ENGINEERS
MYRTLE BEACH, SOUTH CAROLINA 29577

PLAN AND PROFILE
EFFLUENT MAIN 1

TIP-TOP TREE FARM
EFFLUENT LAND
APPLICATION PROJECT
GRAND STRAND WATER
AND SEWER AUTHORITY

DATE:	MAR. 1999
DESIGNED:	WDL
DRAWN:	KLM
CHECKED:	WDL
SCALE:	AS SHOWN

SHEET NO.
EFF-19
OF: 21

HOBBS, UPCHURCH & ASSOC. MB J:\GS9901\800\820\Contract 2 Asbuilts\SHT-1-PP18.dwg EDITED BY: ARABON DATE: 07/20/01 TIME: 16:27 XREFS: J:\GS9901\800\810\points.dwg Layout: Layout1

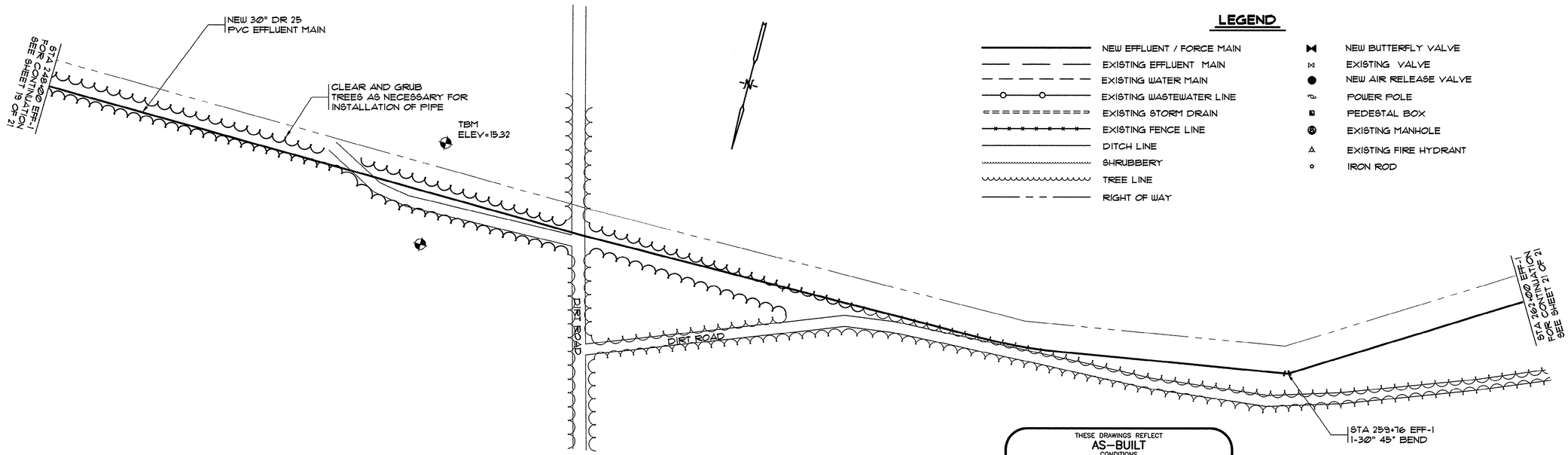

LEGEND

- NEW EFFLUENT / FORCE MAIN
- EXISTING EFFLUENT MAIN
- EXISTING WATER MAIN
- EXISTING WASTEWATER LINE
- EXISTING STORM DRAIN
- EXISTING FENCE LINE
- DITCH LINE
- SHRUBBERY
- TREE LINE
- RIGHT OF WAY
- NEW BUTTERFLY VALVE
- EXISTING VALVE
- NEW AIR RELEASE VALVE
- POWER POLE
- PEDESTAL BOX
- EXISTING MANHOLE
- EXISTING FIRE HYDRANT
- IRON ROD

THESE DRAWINGS REFLECT
AS-BUILT
CONDITIONS

REVIEWED BY: _____ INSPECTIONS DATE

REVIEWED BY: _____ ENGINEERING DATE

GRAND STRAND WATER AND SEWER AUTHORITY

50' 0 25' 50' 100'

EFFLUENT-MAIN-1

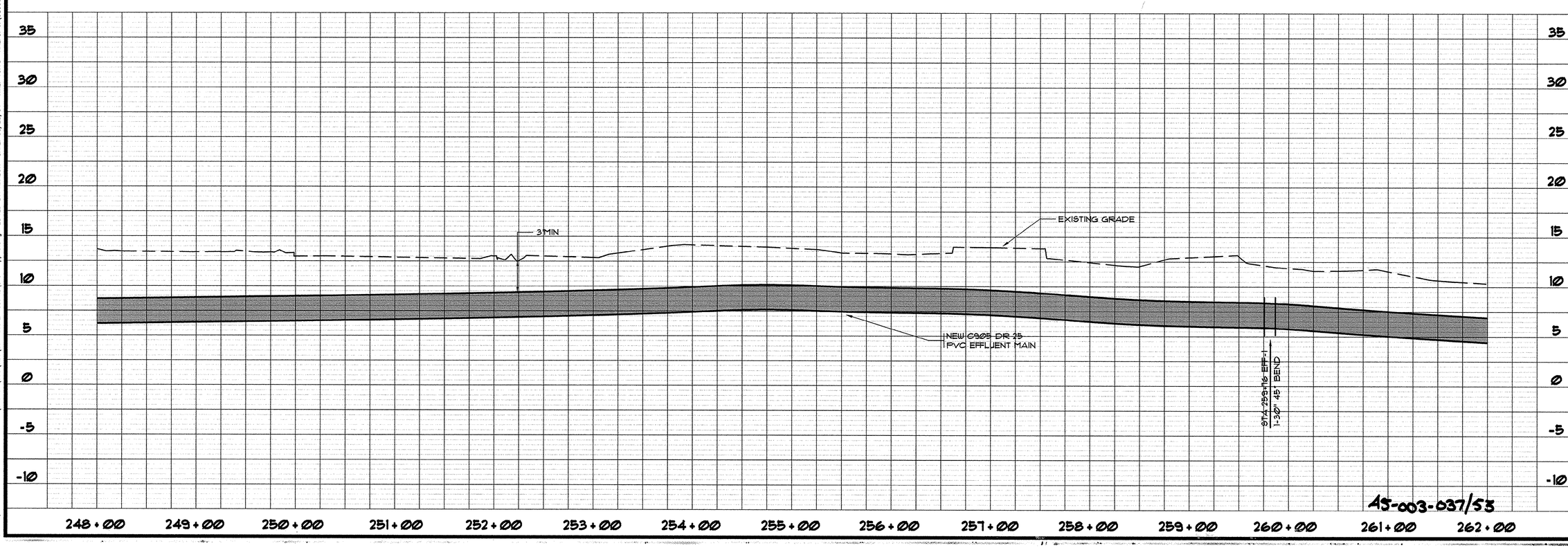

AS-003-037/53

REVISIONS			
SYM.	DESCRIPTION	DATE	BY
	AS-BUILT	8/01/01	CAR

SOUTH CAROLINA PROFESSIONAL ENGINEER REGISTERED No. 12335 JOSEPH W. MCCLOUGHAN

HOBBS, UPCHURCH & ASSOCIATES, P.A.
CONSULTING ENGINEERS
MYRTLE BEACH, SOUTH CAROLINA 29577

PLAN AND PROFILE
EFFLUENT MAIN 1

TIP-TOP TREE FARM
EFFLUENT LAND
APPLICATION PROJECT
GRAND STRAND WATER
AND SEWER AUTHORITY

DATE:	MAR. 1999
DESIGNED:	WDL
DRAWN:	KLM
CHECKED:	WDL
SCALE:	AS SHOWN

SHEET NO.
EFF-20
OF: 21

HOBBS, UPCHURCH & ASSOC. MB J:\GS9901\800\820\Contract 2 Asbuilts\sht-1-pp19.dwg EDITED BY: ABABON DATE: 08/28/01 TIME: 13:18 XREFS: J:\GS9901\800\810\points.dwg Layout: Layout1

THESE DRAWINGS REFLECT
AS–BUILT
CONDITIONS

REVIEWED BY: _____ INSPECTIONS DATE

REVIEWED BY: _____ ENGINEERING DATE

GRAND STRAND WATER AND SEWER AUTHORITY

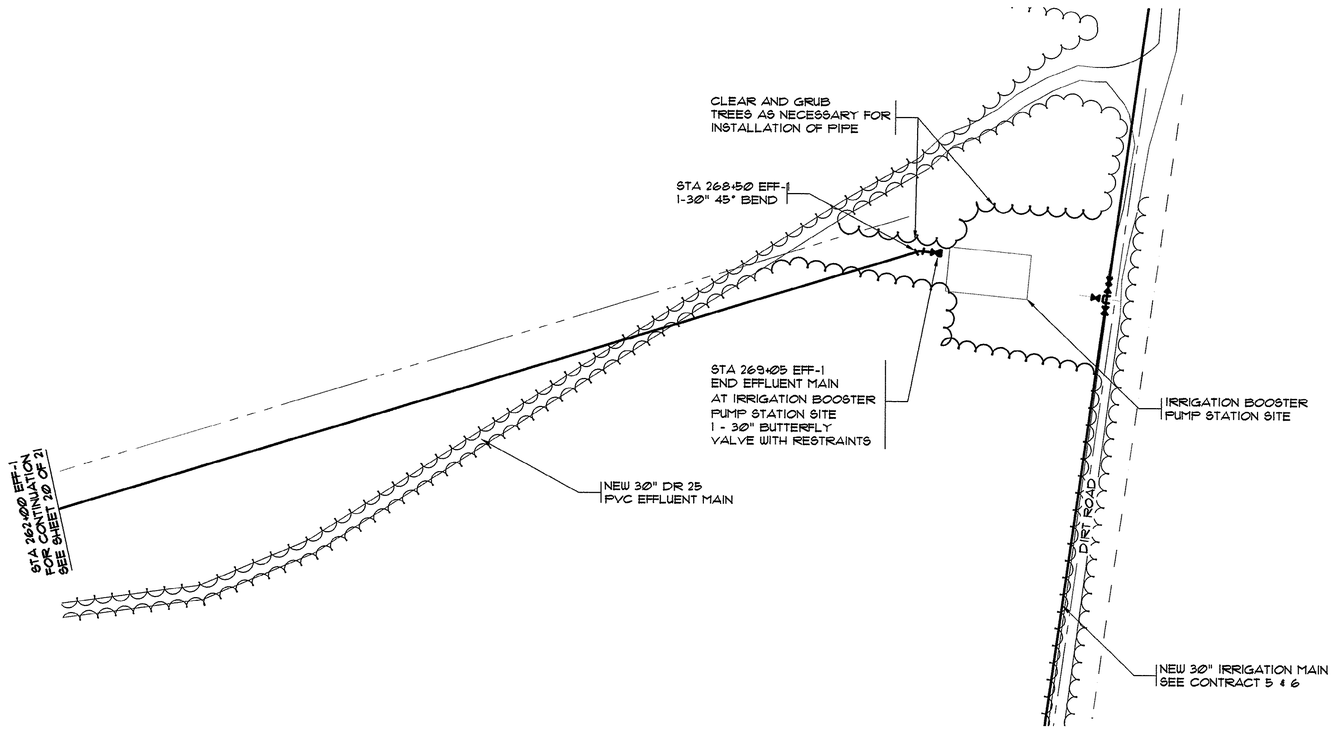

LEGEND

- NEW EFFLUENT / FORCE MAIN
- EXISTING EFFLUENT MAIN
- EXISTING WATER MAIN
- EXISTING WASTEWATER LINE
- EXISTING STORM DRAIN
- EXISTING FENCE LINE
- DITCH LINE
- SHRUBBERY
- TREE LINE
- RIGHT OF WAY
- NEW BUTTERFLY VALVE
- EXISTING VALVE
- NEW AIR RELEASE VALVE
- POWER POLE
- PEDESTAL BOX
- EXISTING MANHOLE
- EXISTING FIRE HYDRANT
- IRON ROD

EFFLUENT-MAIN-1

50' 0 25' 50' 100'

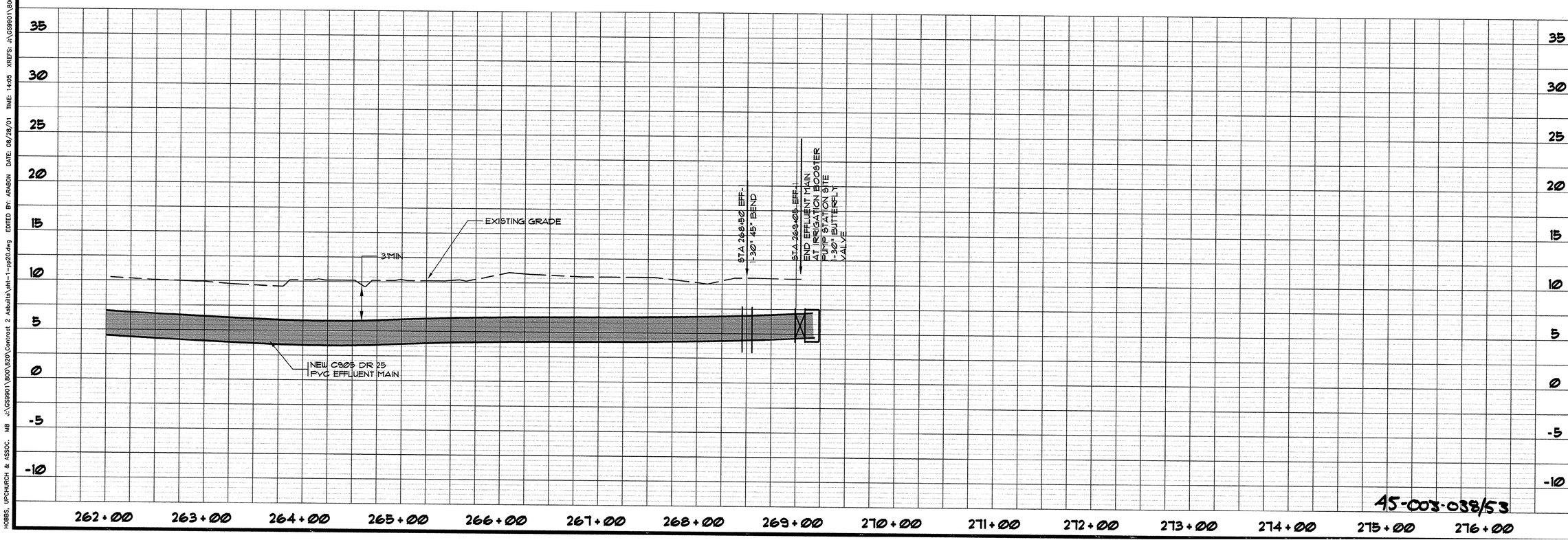

45-003-038/53

REVISIONS			
SYM.	DESCRIPTION	DATE	BY
	AS-BUILT	8/01/01	CAR

SOUTH CAROLINA PROFESSIONAL ENGINEER No. 12335 REGISTERED JOSEPH W. MCCOLLUM

HOBBS, UPCHURCH & ASSOCIATES, P.A.
CONSULTING ENGINEERS
MYRTLE BEACH, SOUTH CAROLINA 29577

PLAN AND PROFILE EFFLUENT MAIN 1

TIP-TOP TREE FARM EFFLUENT LAND APPLICATION PROJECT

GRAND STRAND WATER AND SEWER AUTHORITY

DATE:	MAR. 1999
DESIGNED:	WDL
DRAWN:	KLM
CHECKED:	WDL
SCALE:	AS SHOWN

SHEET NO.
EFF-21
OF: 21

HOBBS, UPCHURCH & ASSOC. MB J:\GS9901\800\820\Contract 2 Asbuilts\eff-1-pp20.dwg EDITED BY: ADABON DATE: 08/28/01 TIME: 14:05 XREFS: J:\GS9901\800\810\points.dwg Layout: Layout1

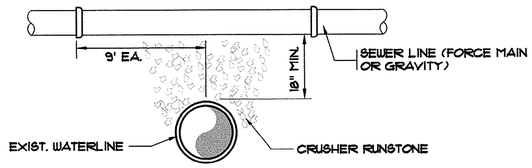

SEWERLINE OVER WATERLINE

NOTE:
D.I.P. MAYBE REQUIRED AT OR SDR18 C900 PVC CROSSING.

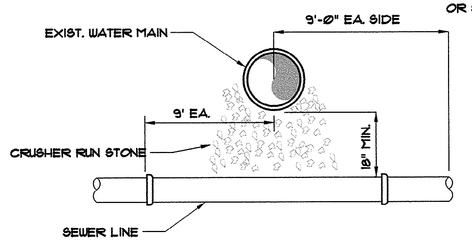

WATERLINE OVER SEWERLINE

WATERLINE CROSSING

N.T.S.

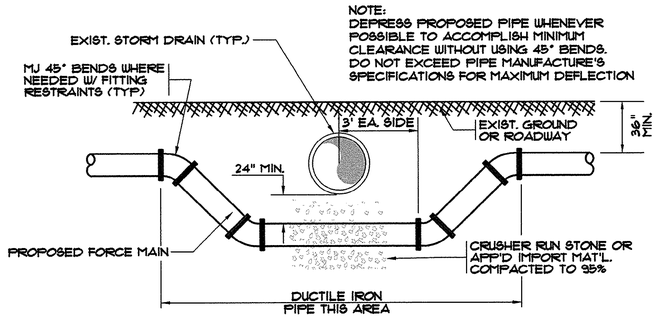

NOTE:
DEPRESS PROPOSED PIPE WHENEVER POSSIBLE TO ACCOMPLISH MINIMUM CLEARANCE WITHOUT USING 45° BENDS. DO NOT EXCEED PIPE MANUFACTURE'S SPECIFICATIONS FOR MAXIMUM DEFLECTION

NOTES:
1) IN CASES WHERE D.I.P. FORCEMAIN IS NEEDED AT STORM DRAIN, D.I.P. SECTION MUST BE AT A SUFFICIENT ELEVATION TO KEEP IT FULL AT ALL TIMES. IF SECTION OF FORCEMAIN CALLING FOR D.I.P. DOES NOT MEET THIS REQUIREMENT, THEN C900 SDR 18 PVC PIPE SHALL BE USED INSTEAD.
2) DEPRESS FORCEMAIN WHENEVER POSSIBLE TO ACCOMPLISH CLEARANCE WITHOUT USE OF FITTINGS.
3) SEWER FORCEMAIN MAY BE PLACED ABOVE STORM DRAIN IF THERE IS 12" MIN. CLEARANCE OF STORM DRAIN, 30" GROUND COVER ABOVE AND AROUND, AND IT MEETS REQUIREMENT OF NOTE 1.

STORM DRAIN CROSSING

N.T.S.

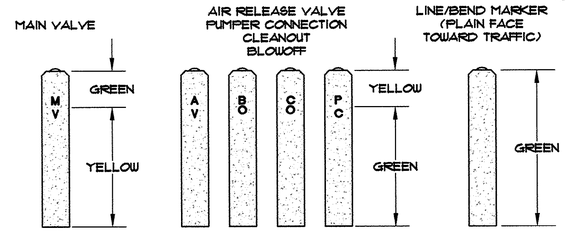

CONCRETE MARKER PAINT CODES

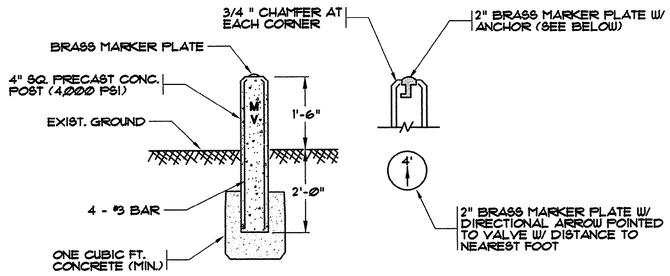

CONCRETE VALVE MARKER

(VALVE, ARV, BLOWOFF, CLEANOUT, PUMPER CONNECTION, BEND, PIPELINE)

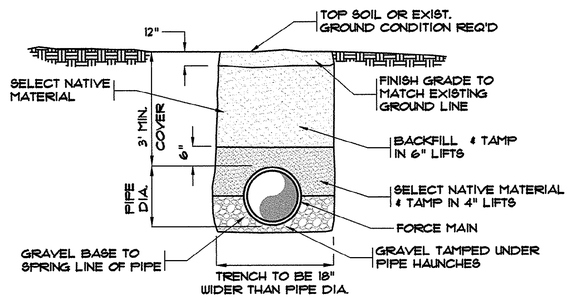

TYPICAL PIPE BEDDING DETAIL

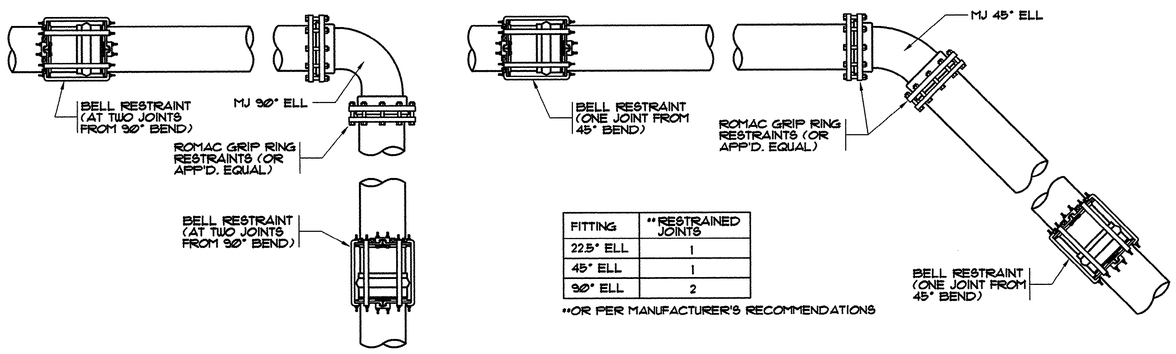

FITTING	**RESTRAINED JOINTS
22.5° ELL	1
45° ELL	1
90° ELL	2

**OR PER MANUFACTURER'S RECOMMENDATIONS

TYPICAL FITTING AND JOINT RESTRAINT

N.T.S. (INCLUDES VALVES)

THESE DRAWINGS REFLECT
AS-BUILT
CONDITIONS

REVIEWED BY: INSPECTIONS DATE
REVIEWED BY: ENGINEERING DATE
GRAND STRAND WATER AND SEWER AUTHORITY

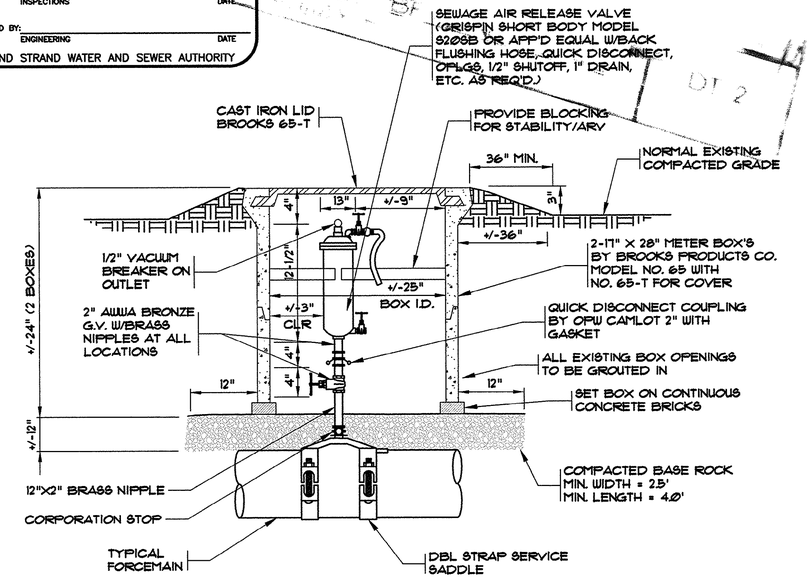

NOTES:

1. USE AN APPROVED JT. COMPOUND ON ALL THREADED CONNECTIONS.
2. ROTATION & LOCATION OF BOX SETTING TO BE APPROVED BY THE INSPECTOR PRIOR TO INSTALLATION.

TYPICAL SEWER AIR RELEASE VALVE ASSEMBLY

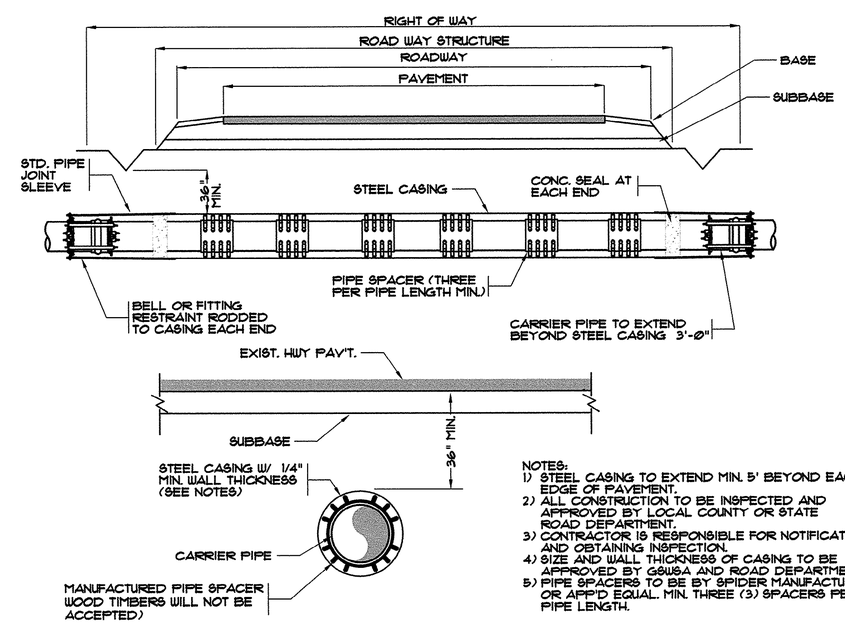

NOTES:
1) STEEL CASING TO EXTEND MIN. 5' BEYOND EACH EDGE OF PAVEMENT.
2) ALL CONSTRUCTION TO BE INSPECTED AND APPROVED BY LOCAL COUNTY OR STATE ROAD DEPARTMENT.
3) CONTRACTOR IS RESPONSIBLE FOR NOTIFICATION AND OBTAINING INSPECTION.
4) SIZE AND WALL THICKNESS OF CASING TO BE APPROVED BY GSWSA AND ROAD DEPARTMENT.
5) PIPE SPACERS TO BE BY SPIDER MANUFACTURING OR APP'D EQUAL. MIN. THREE (3) SPACERS PER PIPE LENGTH.

TYPICAL ROADWAY BORE & JACK

N.T.S.

45-003-039/53

REVISIONS

STM.	DESCRIPTION	DATE	BY
	AS-BUILT	10/5/00	
	AS-BUILT	8/01/01	CAR

SOUTH CAROLINA PROFESSIONAL ENGINEER REGISTERED No. 12335 W. HARRY MCCOLLUM

HOBBS, UPCHURCH & ASSOCIATES, P.A.
CONSULTING ENGINEERS
MYRTLE BEACH, SOUTH CAROLINA 29577

MISCELLANEOUS DETAILS

TIP-TOP TREE FARM EFFLUENT LAND APPLICATION PROJECT
GRAND STRAND WATER AND SEWER AUTHORITY

DATE:	MAR. 1999
DESIGNED:	WDL
DRAWN:	KLM
CHECKED:	WDL
SCALE:	AS SHOWN

SHEET NO. DT-1
OF: 5

HOBBS, UPCHURCH & ASSOC. MB J:\GS9901\800\820\Contract 2 Asbuilts\DETAILS1.dwg EDITED BY: ARABON DATE: 08/01/01 TIME: 08:02 Layout: Model

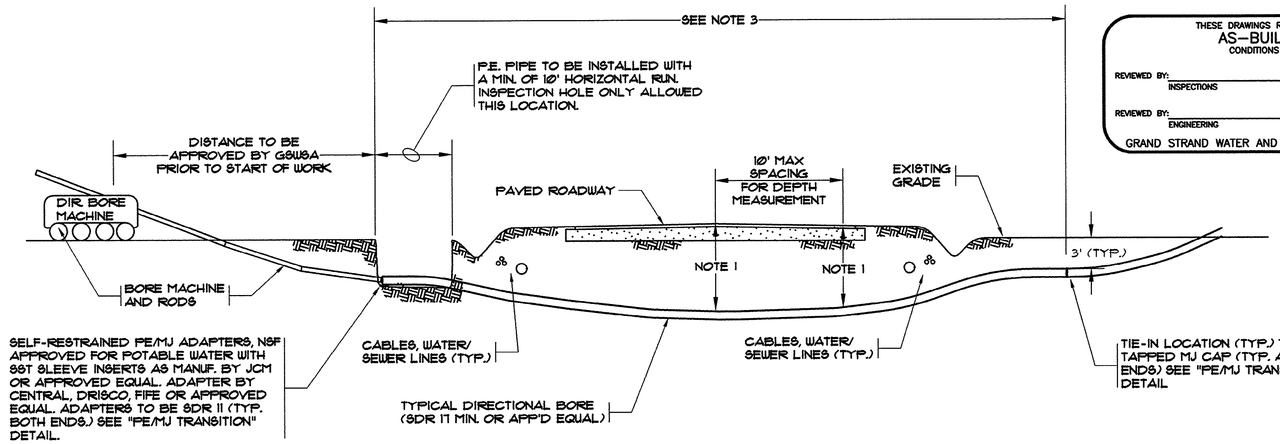

THESE DRAWINGS REFLECT
AS-BUILT
CONDITIONS

REVIEWED BY: _____ INSPECTIONS DATE

REVIEWED BY: _____ ENGINEERING DATE

GRAND STRAND WATER AND SEWER AUTHORITY

NOTES:
1. A PROFILE AND PLAN SHALL BE PROVIDED FROM ENTRY TO EXIT FOR EACH DIRECTIONAL BORE SECTION BY THE DIRECTIONAL BORE CONTRACTOR.
2. ALL BORE SECTIONS SHALL BE HYDROSTATICALLY TESTED PER GSWSA STANDARDS UPON COMPLETION OF INSTALLATION AND PRIOR TO CONNECTION TO THE MAIN PROJECT WATER/SEWER LINE.
3. LENGTH OF CROSSING, LOCATION OF INSPECTION/OBSERVATION EXCAVATION, NUMBER OF P.E. PIPE JOINTS, LOCATION OF BORE MACHINE, AUGER ENTRANCE LOCATION, AND TIE-IN POINTS ARE TO BE APPROVED BY GSWSA PRIOR TO ANY START OF WORK OR ORDERING OF MATERIALS.
4. THIS DETAIL IS ALSO APPLICABLE TO STREAMS, WETLANDS, LARGE STORM DRAINS, AND SIMILAR APPLICATIONS FOR DIRECTIONAL BORE WITH POLY-ETHYLENE PIPE.
5. THE BORE DEVELOPED FOR THE LEAD IN END OF THE PIPE SHALL BE KEPT AT A MINIMUM DIAMETER FOR THE PIPE INSTALLATION. THE LEAD IN END SHALL BE PULLED THROUGH WITHOUT THE M.J. FLANGE ATTACHED FOR LARGER THAN 6" PIPE INSTALLATIONS. THE M.J. FLANGE FOR SAID LEAD IN END SHALL BE INSTALLED AFTER THE PIPE INSTALLATION WITH THE USE OF A SPLIT M.J. FLANGE PER THE DETAIL ON THIS DRAWING.

TYPICAL ROADWAY DIRECTIONAL BORE FOR POLYETHYLENE (PE) PIPE
N.T.S.

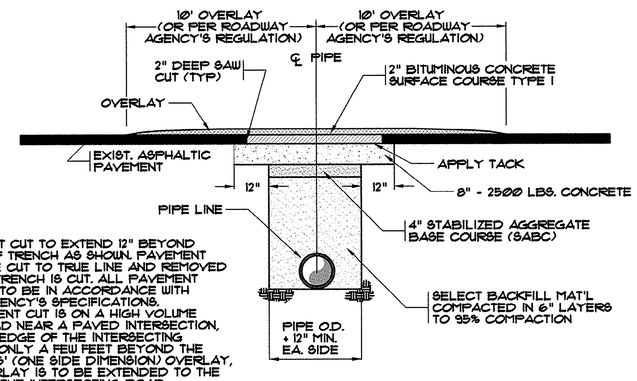

NOTES:
1) PAVEMENT CUT TO EXTEND 12" BEYOND EDGES OF TRENCH AS SHOWN. PAVEMENT SHALL BE CUT TO TRUE LINE AND REMOVED BEFORE TRENCH IS CUT. ALL PAVEMENT REPAIRS TO BE IN ACCORDANCE WITH ROAD AGENCY'S SPECIFICATIONS.
2) IF PAVEMENT CUT IS ON A HIGH VOLUME MAIN ROAD NEAR A PAVED INTERSECTION, AND THE EDGE OF THE INTERSECTING ROAD IS ONLY A FEW FEET BEYOND THE NORMAL 5' (ONE SIDE DIMENSION) OVERLAY, THE OVERLAY IS TO BE EXTENDED TO THE EDGE OF THE INTERSECTING ROAD.

OPEN CUT REPAIR FOR HIGH VOLUME ASPHALT PAVEMENT
N.T.S.

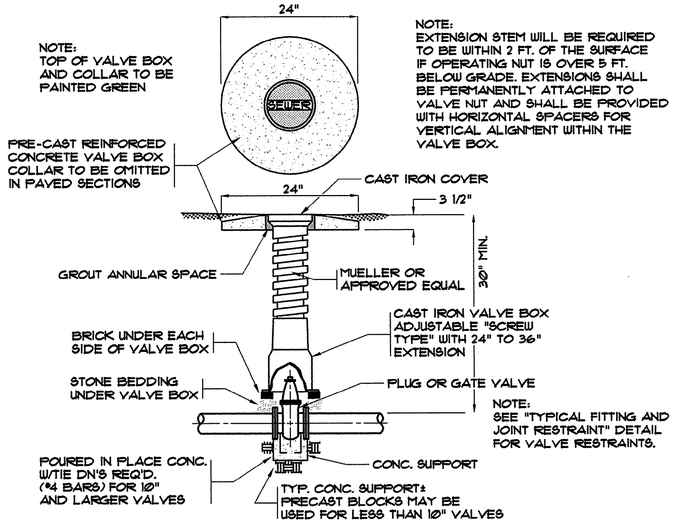

TYPICAL VALVE AND VALVE BOX
N.T.S.

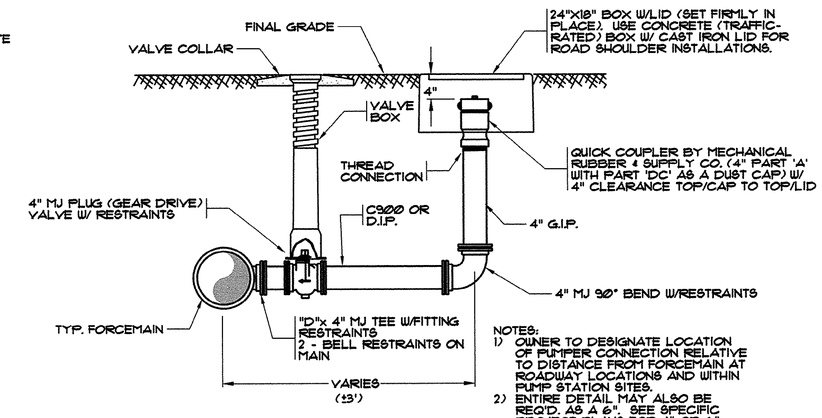

NOTES:
1) OWNER TO DESIGNATE LOCATION OF PUMPER CONNECTION RELATIVE TO DISTANCE FROM FORCEMAIN AT ROADWAY LOCATIONS AND WITHIN PUMP STATION SITES.
2) ENTIRE DETAIL MAY ALSO BE REQ'D. AS A 6". SEE SPECIFIC PROJECT PLANS FOR 4" OR 6".
3) TOP OF VALVE BOX & COLLAR TO BE 6" BELOW FINAL GRADE IF INSTALLED IN ROADWAY OR SHOULDER.

PUMPER CONNECTION DETAIL
N.T.S.

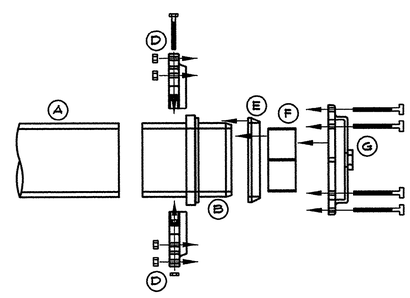

PRE-ASSEMBLY

ASSEMBLED

A) HDPE PIPE
B) HDPE/MJ TRANSITION FITTING
C) HDPE FUSED JOINT
D) SPLIT MJ GLAND
E) MJ RUBBER GASKET
F) SST SLEEVE INSERT
G) MJ TAPPED CAP

PE/MJ TRANSITION ASSEMBLEY
N.T.S.

NOTES:
1) PAVEMENT CUT TO EXTEND 6" BEYOND EDGES OF TRENCH AS SHOWN. PAVEMENT SHALL BE CUT TO TRUE LINE AND REMOVED BEFORE TRENCH IS CUT. ALL PAVEMENT REPAIRS TO BE IN ACCORDANCE WITH ROAD AGENCY SPECS.
2) ROAD AGENCY MAY REQUIRE A CUT & PATCH OF TRENCH AREA AND AN OVERLAY OF ENTIRE APRON OR ENTRANCE FROM THE EDGE OF THE MAIN ROAD TO THE EDGE OF THE ROAD RIGHT-OF-WAY (SEE ENCROACHMENT PERMIT).
3) WHERE EXISTING PAVEMENT IS INSUFFICIENT THICKNESS TO DEVELOP TIGHT SEAL WITH NEW SURFACE, NEW PAVEMENT SHALL LAP EXISTING SURFACE WITH AT LEAST A 10' OVERLAP ON BOTH SIDES FOR SMOOTH TRANSITION OR AS PER SPEC'S. OF ROAD AGENCY.

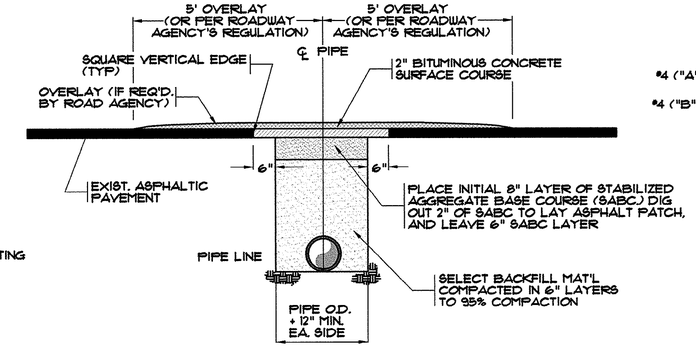

OPEN CUT REPAIR FOR LOW VOLUME ASPHALT PAVEMENT
N.T.S.

NOTE:
CONCRETE CUT TO EXTEND 18" BEYOND EDGES OF TRENCH AS SHOWN. PAVEMENT SHALL BE CUT TO TRUE LINE AND REMOVED BEFORE TRENCH IS CUT. ALL PAVEMENT REPAIRS TO BE IN ACCORDANCE WITH ROAD AGENCY SPECS.

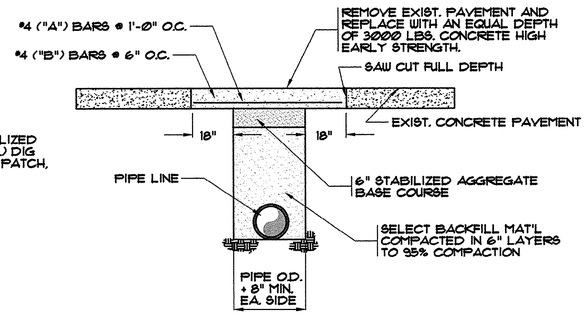

OPEN CUT REPAIR FOR CONCRETE PAVEMENT
N.T.S.

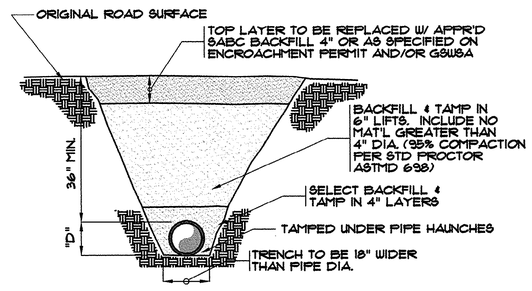

UNPAVED ROADWAY BEDDING DETAIL
N.T.S.

45-003-090/53

REVISIONS			
SYM.	DESCRIPTION	DATE	BY
*	GSW&SA REVISIONS	6/6/97	BEB
	AS-BUILT	10/5/00	
	AS-BUILT	8/01/01	CAR

SOUTH CAROLINA PROFESSIONAL ENGINEER No. 12335 REGISTERED JOSEPH W. MCCHUCHAN

HOBBS, UPCHURCH & ASSOCIATES, P.A.
CONSULTING ENGINEERS
MYRTLE BEACH, SOUTH CAROLINA 29577

MISCELLANEOUS DETAILS

TIP-TOP TREE FARM EFFLUENT LAND APPLICATION PROJECT
GRAND STRAND WATER AND SEWER AUTHORITY

DATE:	MAR. 1999
DESIGNED:	WDL
DRAWN:	KLM
CHECKED:	WDL
SCALE:	AS SHOWN

SHEET NO. DT-2 OF: 5

HOBBS, UPCHURCH & ASSOC. MB J:\GS9901\800\820\Contract 2 Asbuilts\DETAILS2.dwg EDITED BY: ARABON DATE: 08/01/01 TIME: 08:03 Layout: Model

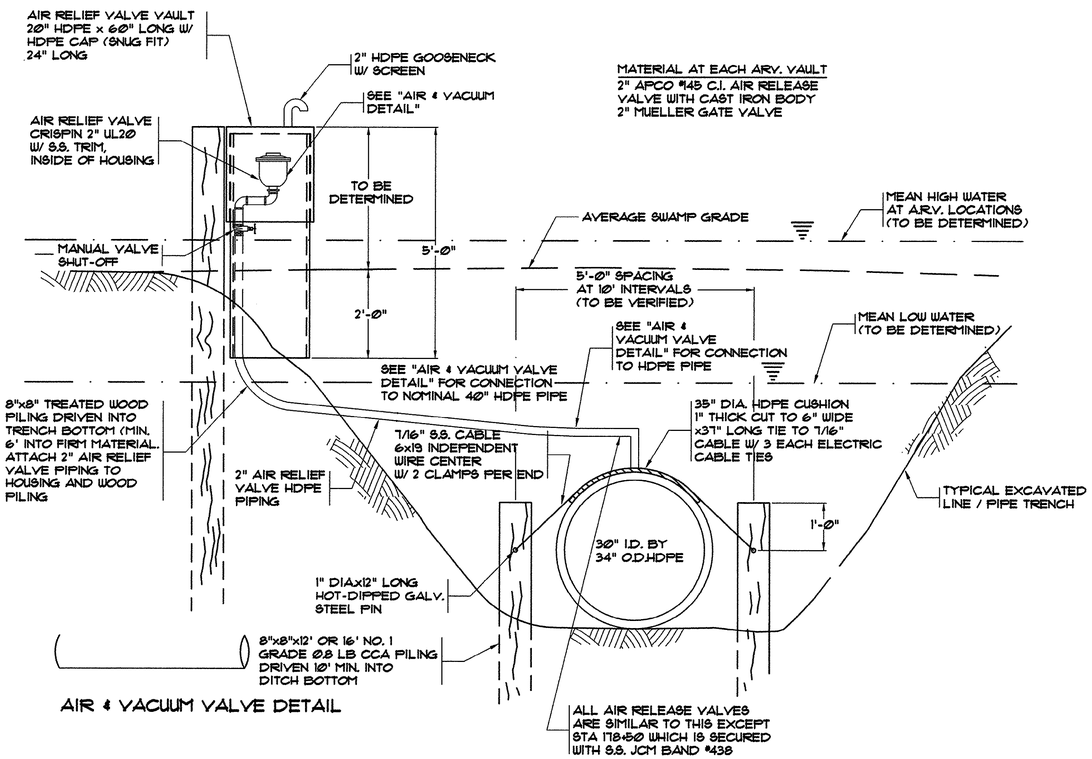

AIR & VACUUM VALVE DETAIL

MATERIAL AT EACH A.R.V. VAULT
2" APCO #145 C.I. AIR RELEASE VALVE WITH CAST IRON BODY
2" MUELLER GATE VALVE

TIE-DOWN & AIR VACUUM RELEASE VAULT DETAIL

SCALE: 3/4 " = 1'-0"

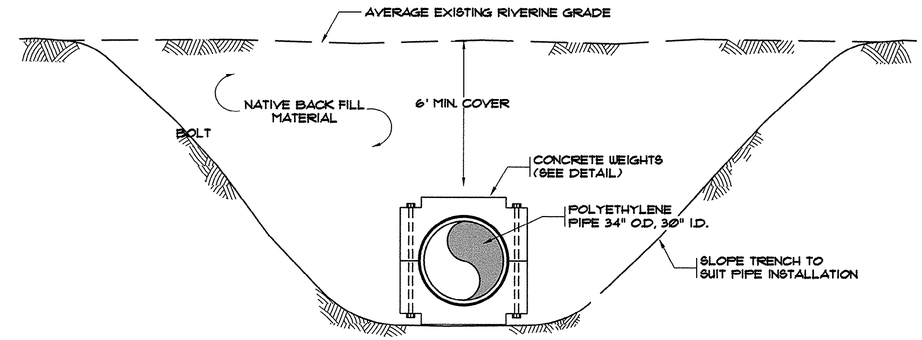

TYPICAL RIVER CROSSING SECTION

(WHERE CONCRETE WEIGHTS WILL BE USED)
SCALE: 3/8 " = 1'-0"

NOTES:

1. WOOD PIPE TIE-DOWNS TO BE USED IN ALL AREAS WHERE CONCRETE WEIGHTS ARE NOT BEING INSTALLED THROUGH MARSH AREAS
2. CONTRACTOR IS TO PROVIDE ENGINEERING SUBMITTALS FOR APPROVAL FOR ALL PROPOSED WOOD PILE TIE-DOWNS, INCLUDING CALCULATIONS FOR SIZE AND SPACING. SEE CONTRACT 3 REQUIREMENTS.

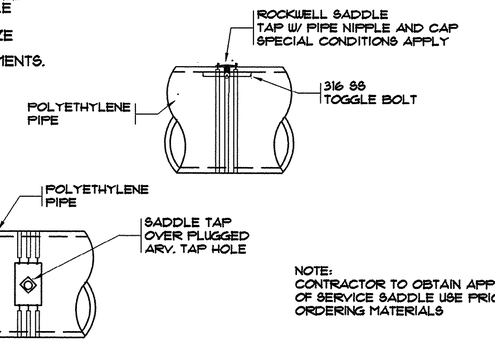

NOTE:
CONTRACTOR TO OBTAIN APPROVAL OF SERVICE SADDLE USE PRIOR TO ORDERING MATERIALS

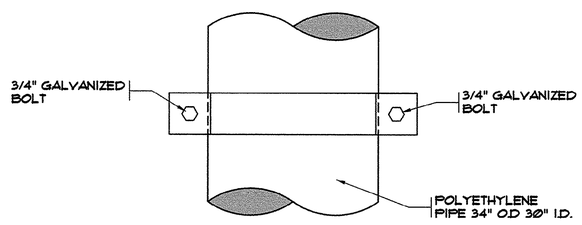

TOP VIEW

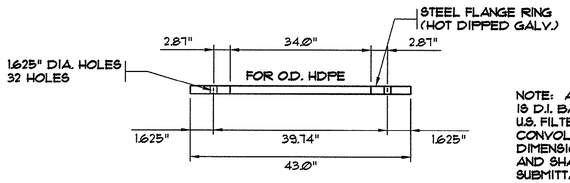

SLIP ON FLANGE AT HDPE END
N.T.S.

NOTE: ALTERNATE TO G.I. FLANGE IS D.I. BACK UP PER U.S. FILTER/DRISCO PIPE CONVOLUTED TYPE. DIMENSIONS ARE APPROX. ONLY AND SHALL BE VERIFIED THRU SUBMITTAL APPROVALS

NOTE:
1. APPROXIMATE LENGTH OF PIPE REQUIRING CONCRETE WEIGHTS IS 1500 FEET. WEIGHTS FOR RIVER AND SOME CREEK AREAS TO BE USED.
2. CONTRACTOR IS TO PROVIDE ENGINEERING SUBMITTALS FOR APPROVAL ALL PROPOSED CONC. ANCHOR MANUFACTURING DETAILS INCLUDING CALCULATIONS DETERMINING SIZE & SPACING FOR CONCRETE ANCHORS. SEE CONTRACT 3 REQUIREMENTS.

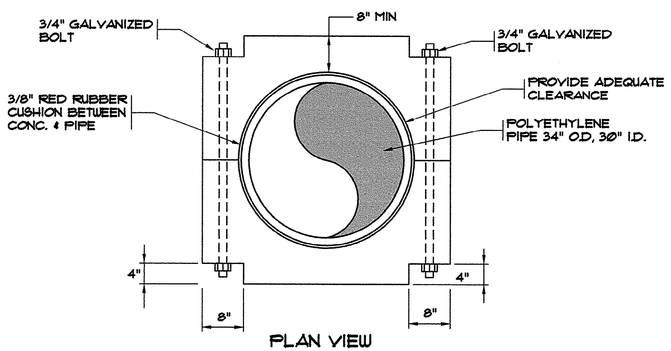

PLAN VIEW
CONCRETE PIPE WIEGHTS

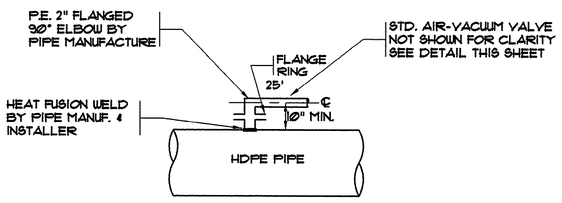

AIR & VACUUM VALVE DETAIL

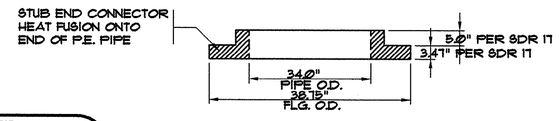

HDPE STUB END CONNECTOR
N.T.S.

THESE DRAWINGS REFLECT
AS-BUILT
CONDITIONS

REVIEWED BY: _____ INSPECTIONS DATE

REVIEWED BY: _____ ENGINEERING DATE

GRAND STRAND WATER AND SEWER AUTHORITY

45-003/040/53

REVISIONS			
SYM.	DESCRIPTION	DATE	BY
	6" SLUDGE LINE SHOWN		
	AS-BUILT	10/5/00	
	AS-BUILT	7/23/01	CAR

SOUTH CAROLINA PROFESSIONAL ENGINEER No. 12335 REGISTERED W. HODGSON MCCLAIN

HOBBS, UPCHURCH & ASSOCIATES, P.A.
CONSULTING ENGINEERS
MYRTLE BEACH, SOUTH CAROLINA 29577

MISCELLANEOUS DETAILS

TIP-TOP TREE FARM EFFLUENT LAND APPLICATION PROJECT
GRAND STRAND WATER AND SEWER AUTHORITY

DATE:	MAR. 1999
DESIGNED:	WDL
DRAWN:	KLM
CHECKED:	WDL
SCALE:	AS SHOWN
SHEET NO.	DT-3
OF:	5

HOBBS, UPCHURCH & ASSOC. MB J:\GS9901\600\820\Contract 2 Asbuilts\w_sling1.dwg EDITED BY: ARABON DATE: 07/23/01 TIME: 09:52 Layout: Model

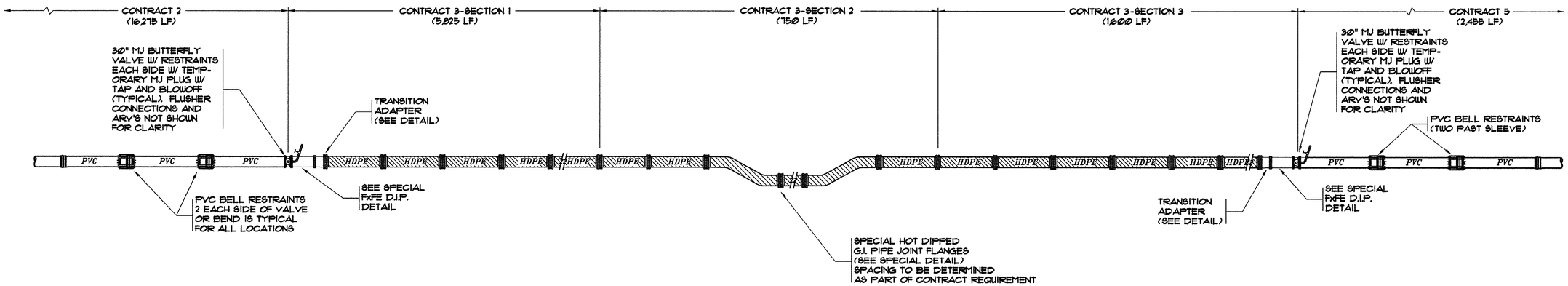

NOTES:
1. SEE DETAIL SHEET FOR ADDITIONAL INFORMATION FOR PVC AND HDPE CONNECTION DETAILS.
2. HDPE SPECIAL FLANGES NOT SHOWN FOR CLARITY.
3. ARV'S NOT SHOWN FOR CLARITY.

DIAGRAM FOR PIPE AND VALVE CONNECTIONS AT END OF CONTRACTS

(NOT TO SCALE)

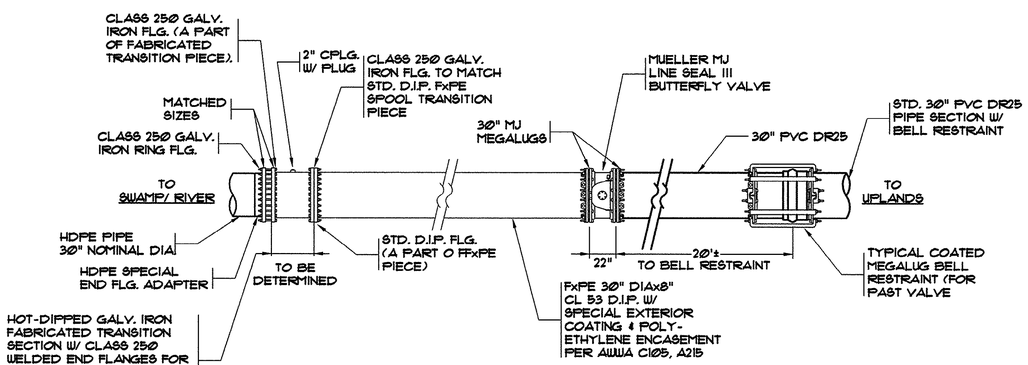

NOTES:
1. SHOP FABRICATION AND DETAILED MATERIAL DIMENSIONS ARE TO BE SUBMITTED FOR APPROVAL PRIOR TO PLACEMENT OF ANY MATERIAL ORDERS.
2. BELL RESTRAINTS ARE REQUIRED AT FIRST TWO PVC JOINTS FROM MJ BUTTERFLY VALVE.
3. SEE ADDITIONAL FLANGE AND TUB END CONNECTOR DETAILS.

TRANSMISSION LINE CONNECTION DETAIL HDPE TO PVC AT VALVE LOCATIONS

(NOT TO SCALE)

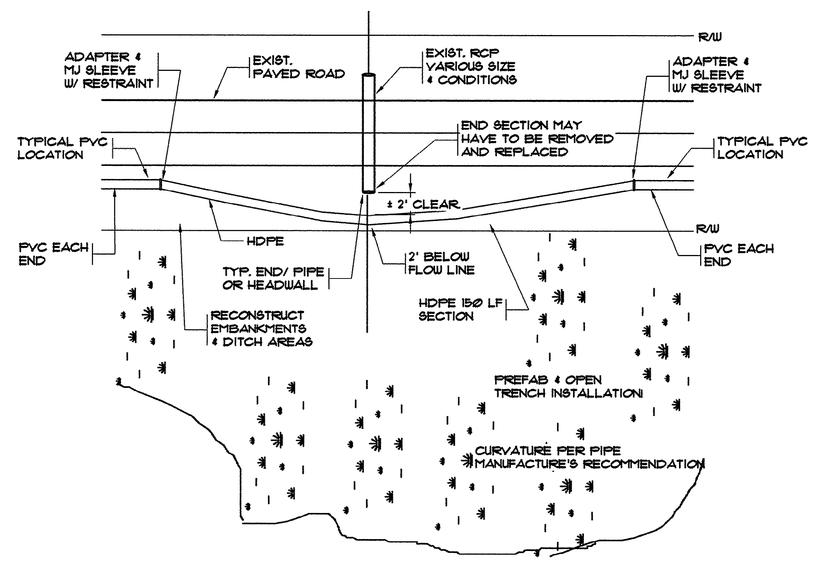

TYPICAL LARGE CREEK-DRAINAGE WAY CROSSINGS HDPE INSTALLATION

THESE DRAWINGS REFLECT
AS-BUILT
CONDITIONS

REVIEWED BY: _____ INSPECTIONS DATE

REVIEWED BY: _____ ENGINEERING DATE

GRAND STRAND WATER AND SEWER AUTHORITY

45-003-041/53

REVISIONS			
SYM.	DESCRIPTION	DATE	BY
	CONTRACT SECTION CHANGES	9/20/99	KLM
	AS-BUILT	10/5/00	
	AS-BUILT	7/23/01	CAR

SOUTH CAROLINA PROFESSIONAL ENGINEER No. 12335 REGISTERED WM. JOSEPH MCCULLOUGH

HOBBS, UPCHURCH & ASSOCIATES, P.A.
CONSULTING ENGINEERS
MYRTLE BEACH, SOUTH CAROLINA 29577

MISCELLANEOUS DETAILS

TIP-TOP TREE FARM EFFLUENT LAND APPLICATION PROJECT
GRAND STRAND WATER AND SEWER AUTHORITY

DATE:	MAR. 1999
DESIGNED:	WDL
DRAWN:	KLM
CHECKED:	WDL
SCALE:	AS SHOWN

SHEET NO. DT-4
OF: 5

HOBBS, UPCHURCH & ASSOC. MB J:\CS9901\800\820\Contract 2 Asbuilts\w_xing2.dwg EDITED BY: APABON DATE: 07/23/01 TIME: 09:51 Layout: Model

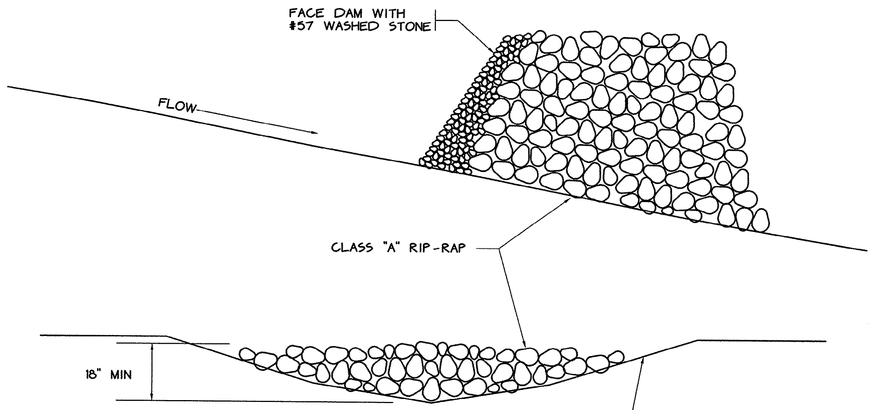

NOTES:

1.) CHECK DAMS SHALL BE REQUIRED ONLY IF TEMPORARY DITCH LINERS DO NOT CONTROL EROSION OR AS DIRECTED BY THE ENGINEER.

2.) CONTRACTOR SHALL REMOVE SEDIMENT ACCUMULATED BEHIND THE DAM TO PREVENT DAMAGE TO CHANNEL VEGETATION.

3.) CONTRACTOR SHALL REMOVE ROCK CHECK DAMS AFTER PERMANANT VEGETATION HAS BEEN ESTABLISHED.

TEMPORARY GRAVEL CHECK DAM DETAIL

SCALE: N.T.S.

THESE DRAWINGS REFLECT
AS-BUILT
CONDITIONS

REVIEWED BY: _____
INSPECTIONS DATE

REVIEWED BY: _____
ENGINEERING DATE

GRAND STRAND WATER AND SEWER AUTHORITY

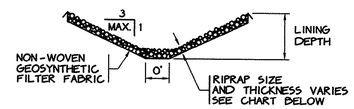

NOTE: CLASS A RIPRAP SHALL BE 9" THICK.
CLASS B RIPRAP SHALL BE 23" THICK.
CLASS I RIPRAP SHALL BE 24" THICK.
CLASS II RIPRAP SHALL BE 27" THICK.

RIPRAP SWALE

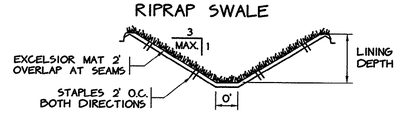

NOTE: PREPARE, SEED AND INSTALL SOIL EROSION CONTROL BLANKET ON DISTURBED AREA OF DITCH.

EXCELSIOR MAT SWALE

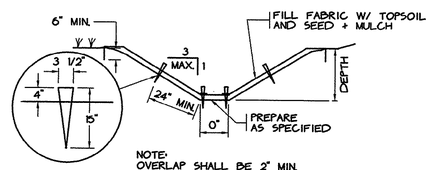

NOTE:
OVERLAP SHALL BE 2" MIN. AND BE LAID WITH OVERLAP OCCURING ON DOWNSLOPE.

"ENKA-MAT" SWALE

SWALE DETAIL

N.T.S.

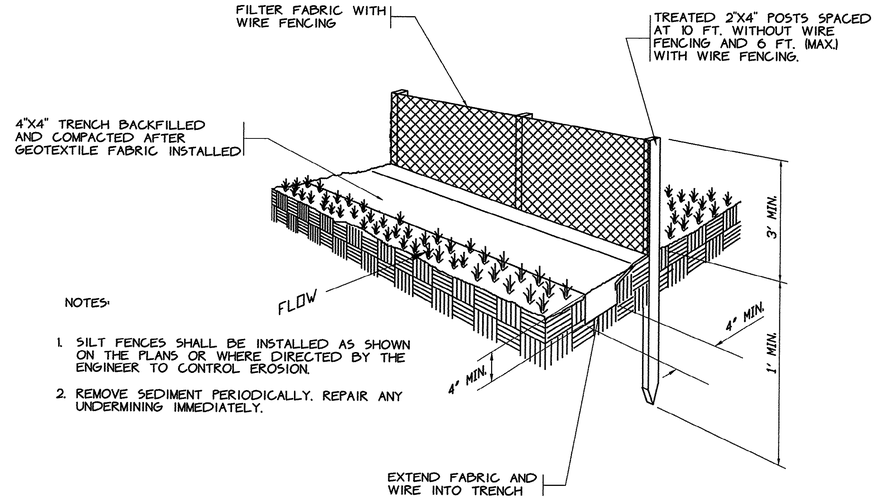

NOTES:

1. SILT FENCES SHALL BE INSTALLED AS SHOWN ON THE PLANS OR WHERE DIRECTED BY THE ENGINEER TO CONTROL EROSION.

2. REMOVE SEDIMENT PERIODICALLY. REPAIR ANY UNDERMINING IMMEDIATELY.

TEMPORARY SILT FENCE DETAIL

SCALE: N.T.S.

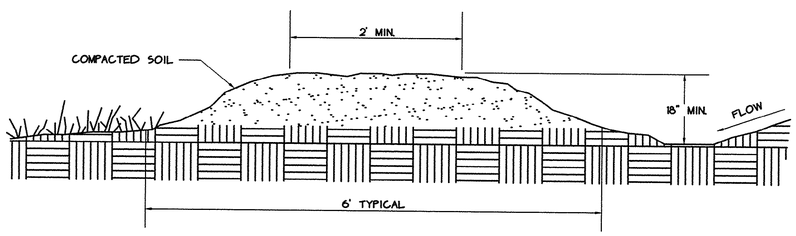

TEMPORARY EARTHEN DIVERSION DIKE

SCALE: N.T.S.

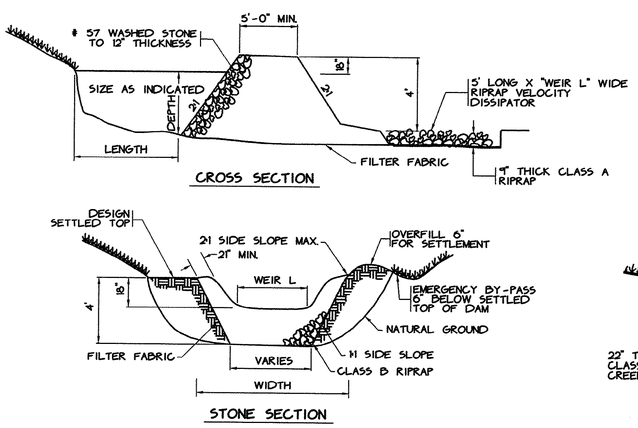

TEMPORARY SEDIMENT TRAP DETAIL

N.T.S.

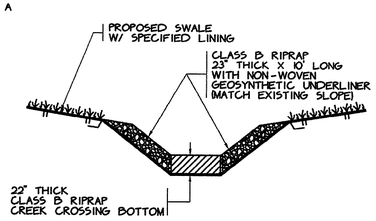

NOTE: MATCH EXISTING BANK SLOPE

CREEK CROSSING W/ RIPRAP SLOPE PROTECTION DETAIL

N.T.S.

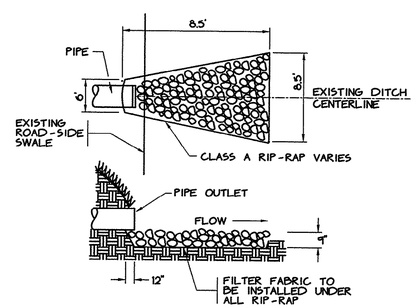

NOTE: IF PIPE DISCAHRGES INTO ROADSIDE SWALE, RIPRAP SHALL ALIGN WITH SPECIFIED SWALE.

DITCH CROSSING DETAIL

N.T.S.

EROSION AND SEDIMENT CONTROL NOTES:

1. UNLESS OTHERWISE INDICATED, ALL VEGETATION AND STRUCTURAL EROSION AND SEDIMENT CONTROL PRACTICES WILL BE CONSTRUCTED AND MAINTAINED ACCORDING TO MINIMUM STANDARDS AND SPECIFICATIONS OF THE EROSION + SEDIMENT CONTROL PLANNING + DESIGN MANUAL + ACCORDING TO THE SPECIFICATIONS.

2. ALL HARD SURFACE PUBLIC ROADS SHALL BE CLEAN AT THE END OF EACH WORK DAY. PROVIDE TEMPORARY CONSTRUCTION ENTRANCES AT THE LOCATIONS SHOWN ON THE PLANS OR AS OTHERWISE NECESSARY.

3. THE LOCATION OF ALL EROSION AND SEDIMENT CONTROL MEASURES ARE APPROXIMATE. THESE DEVICES SHALL BE LOCATED TO ACHIEVE MAXIMUM BENEFIT. IF DURING CONSTRUCTION THESE DEVICES ARE NOT SUFFICIENT TO ADEQUATELY CONTROL EROSION AND SEDIMENTATION. ADDITIONAL EROSION CONTROL DEVICES SHALL BE INSTALLED AS DIRECTED BY THE ENGINEER.

4. ALL TEMPORARY EROSION AND SEDIMENT CONTROL MEASURES SHALL BE REMOVED AND DISPOSED OF WITHIN 30 DAYS AFTER FINAL SITE STABILIZATION.

5. CONTRACTOR SHALL TAKE ALL STEPS NECESSARY TO PREVENT SEDIMENT (GENERATED BY CONSTRUCTION OR EROSION) FROM ENTERING STREAMS. CONSTRUCTION VEHICLES WILL NOT BE ALLOWED IN FLOWING STREAM CHANNELS OR TO DAMAGE THEIR BANKS. TEMPORARY STREAM CROSSINGS SHALL BE INSTALLED IN ALL FLOWING STREAMS WHICH WILL HAVE CONSTRUCTION TRAFFIC CROSSING THEM.

6. STOCKPILING OF EXCESS MATERIALS IN WETLAND AREAS IS NOT ALLOWED.

7. IN GENERAL, ALL EROSION AND SEDIMENT CONTROL MEASURES SHALL BE CHECKED AFTER EACH RAINFALL OR WEEKLY, WHICHEVER IS MORE FREQUENT (AT LEAST DAILY DURING PERIODS OF PROLONGED RAINFALL). CONTRACTOR SHALL CLEAN AND REPAIR ACCORDINGLY.

8. ALL WORK PERFORMED SHALL BE IN COMPLIANCE WITH GSWSA STORM WATER POLLUTION PREVENTION PLAN.

REVISIONS

SYM.	DESCRIPTION	DATE	BY
	AS-BUILT	10/5/00	
	AS-BUILT	8/01/01	CAR

SOUTH CAROLINA PROFESSIONAL ENGINEER No. 12335 REGISTERED JOSEPH W. MCCOLLUM

HOBBS, UPCHURCH & ASSOCIATES, P.A.
CONSULTING ENGINEERS
MYRTLE BEACH, SOUTH CAROLINA 29577

EROSION CONTROL DETAILS

TIP-TOP TREE FARM EFFLUENT LAND APPLICATION PROJECT
GRAND STRAND WATER AND SEWER AUTHORITY

DATE:	MAR. 1999
DESIGNED:	WDL
DRAWN:	KLM
CHECKED:	WDL
SCALE:	AS SHOWN

SHEET NO.
DT-5
OF: 5

45-003-042/53

HOBBS, UPCHURCH & ASSOC. MB J:\GS9901\800\820\Contract 2 Asbuilts\DETAILS3.dwg EDITED BY: ABABON DATE: 08/01/01 TIME: 08:06 Layout: Model

HEATING AND VENTILATION SCHEDULE FOR IRRIGATION PUMP STATION

TYPE	DESCRIPTION
VF-2 VF-3	FAN CFM SHALL BE 7,000, STATIC PRESSURE = 0.375 W.C., 860 RPM, 3/4 HORSEPOWER, 460 VOLTS, 3 PHASE, WITH WALL MOUNTING COLLAR, GRAVITY BACK DRAFT DAMPER AND MOTOR SIDE FAN GUARD. FAN SHALL BE GREENHECK MODEL SPE-1H30-7 OR APPROVED EQUAL. DAMPER SIZE – 32"x 32", WALL OPENING REQUIRED 39 3/4" x 39 3/4" INTAKE LOUVERS: (2) 48" x 48" WITH MOTOR OPERATED DAMPERS EXHAUST LOUVERS: (2) 48"x 48" WITH GRAVITY DAMPERS
EUH-1 EUH-2	ELECTRIC UNIT HEATER HEATERS SHALL BE RATED 17,100 BTU/HR, 5 KW AT 480 VOLTS, 3 PHASE. FAN PANEL SHALL HAVE AN AIR VOLUME OF 420 CFM AND SHALL BE RATED 480 VOLTS, 3 PHASE. THE HEATER SHALL BE BOTH MOISTURE AND CORROSION RESISTANT AND CAPABLE OF BEING HOSED DOWN. ELEMENTS SHALL BE LONG LIFE MONEL FINTUBES WITH STAINLESS STEEL THREADED FITTINGS. MOTOR SHALL BE TOTALLY ENCLOSED, PERMANENTLY LUBRICATED BALL BEARING TYPE AND EPOXY PAINTED WITH ONE COAT OF ZINC CHROMATE PRIMER AND TWO COATS OF CORROSION RESISTANT PAINT. UNIT SHALL BE COMPLETELY SELF-CONTAINED WITH BUILT-IN CONTACTORS. OVER-TEMPERATURE CUT-OUT AND ADJUSTABLE THERMOSTAT WITH TEMPERATURE RANGE OF 40°-100°F. CEILING MOUNT 9'-0" ABOVE FINISHED FLOOR. MARKEL MODEL P3P5105CAIN OR APPROVED EQUAL.
	LOUVERS ALUMINUM COMBINATION WALL LOUVERS WITH DRAINABLE BLADES. FRONT STATIONARY BLADES: 37 1/2" ANGLE, 0.081" BLADE THICKNESS, 4 1/2" BLADE SPACING. REAR ADJUSTABLE BLADES: 0.140" BLADE THICKNESS, VINYL BLADE EDGE SEALS, BIRDSCREEN, MOTORIZED DAMPERS INTERLOCKED TO VENT. FAN, 120V, 60 HZ. SIZE: 3'-4" x 3'-0" DEEP RUSKIN OR APPROVED EQUAL.
AC-1 AC-2 AC-3	AC UNIT COOLING CAPACITY – 14,8000 BTUH, EER-9.0, 230V, 1-PHASE, ELECTRIC HEAT CAPACITY – 12,900 BTUH, FUSE SIZE 30A. CARRIER GYA3153 OR APPROVED EQUAL

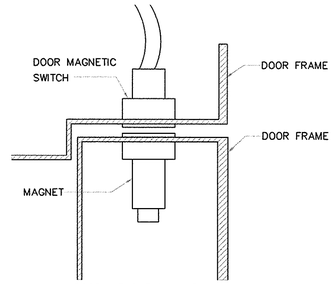

DOOR WITHOUT CHANNEL

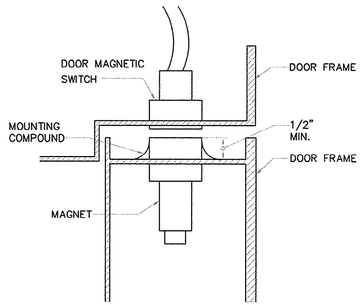

DOOR WITH CHANNEL

TYPICAL " (MS) " MOUNTING

NOT TO SCALE
NOTES:
1. USE SWITCHES FROM SENTROL, WIDE GAP TYPE, OR APPROVED EQUAL.

ELECTRICAL DRAWING LIST

THESE DRAWINGS REFLECT
AS-BUILT
CONDITIONS

REVIEWED BY: _____
INSPECTIONS DATE

REVIEWED BY: _____
ENGINEERING DATE

GRAND STRAND WATER AND SEWER AUTHORITY

ELECTRICAL SYMBOL SCHEDULE

SYMBOL	DESCRIPTION
	CONDUIT CONCEALED IN OR ABOVE CEILING: IN OVERHEAD SLAB: OR IN WALL
	CONDUIT CONCEALED IN OR BELOW FLOOR: BELOW GRADE: OR IN WALL
	CONDUIT RUN EXPOSED AS HIGH AS POSSIBLE
	IF SHOWN, CROSS LINES INDICATE NUMBER OF CURRENT CARRYING CONDUCTORS. EQUIPMENT GROUNDING CONDUCTORS ARE GENERALLY NOT INCLUDED IN THE QUANTITY INDICATED.
G	#1/0 THHW/THWN COPPER – 24" BELOW GRADE
	HOME RUN TO PANEL – WITH PANEL AND CIRCUIT DESIGNATION.
	CONDUIT STUB-IN WITH CONNECTION TO EQUIPMENT
J OR J	JUNCTION OR PULL BOX. SIZE PER N.E.C.
J	WATER TIGHT BOX WITH FUSES FOR POWER CONNECTION TO ISTTRUMENTATION REFER TO TYPICAL DETAIL ON SHEET E9.
	FLUORESCENT FIXTURE, CEILING, WALL OR RECESS MOUNTED AS SCHEDULED DRAWN APPROXIMATELY TO SCALE
	WALL OUTLET – INCANDESCENT, COMPACT FLUORESCENT, OR HID FIXTURE AS SCHEDULED.
	POST-TOP AREA LIGHT FIXTURE – TYPE "SA"
E	WALL MOUNTED, STANDBY BATTERY POWERED FIXTURE AS SCHEDULED – MOUNT 12" BELOW JOIST.
S	SINGLE POLE SWITCH – 20A, 120-277V. MOUNT 46" AFF TO TOP AND 2" FROM STRIKE SIDE OF DOOR FRAME.
S_3	THREE WAY SWITCH-20A, 120-277V, MOUNT 46" AFF AND 2" FROM STRIKE SIDE OF DOOR FRAME.
	BRANCH CIRCUIT OR DISTRIBUTION PANELBOARD, AS INDICATED
	CONTROL PANEL
	CONVENIENCE RECEPTACLE – MOUNT 18" AFF. NEMA 5-20R, DUPLEX
XR	CORROSION RESISTANT NEMA 5-20R OUTLET. HUBBELL #53CM22 WITH #52CM22 COVERPLATE. MOUNT 18" AFF.
6-30R	SPECIAL CONFIGURATION OUTLET – NEMA 6-30R CONFIGURATION MOUNT TO FIT AC UNIT.
W	WALL TELEPHONE OUTLET, 54" AFF.
	NONFUSIBLE DISCONNECT SWITCH.
	FUSIBLE DISCONNECT SWITCH.
	ENCLOSED CIRCUIT BREAKER.
$_3$	C-FVNR WITH FUSIBLE DISCONNECT SWITCH. NUMERAL INDICATES RK-5 FUSE SIZE.
T	THERMOSTAT, LINE VOLTAGE
	DRY TYPE TRANSFORMER – SINGLE PHASE, 480-120/240 VOLTS.
Δ-Y	DRY TYPE TRANSFORMER – THREE PHASE, 480-120/208 VOLTS.
5	460 VOLT, 3 PHASE MOTOR – NUMERAL INDICATES HORSEPOWER.
	INDICATES GROUNDING ELECTRODE CONDUCTOR AS REQUIRED BY ARTICLES 250-66 OF THE NATIONAL ELECTRICAL CODE.
SA	SURGE ARRESTER
GR	GROUND ROD – 10' x 3/4" STAINLESS STEEL
FAC	FIRE ALARM CONTROL PANEL
	CEILING MOUNTED SMOKE DETECTOR, PHOTOELECTRIC TYPE
H	CEILING MOUNTED COMBINATION RATE-OF-RISE/FIXED TEMPERATURE FIRE DETECTOR
F	FIRE ALARM COMBINATION ADA CHIME/STROBE APPLIANCE – MOUNT 6'-8" AFF, FROM BOTTOM OF APPLIANCE, OR 0'-6" BELOW CEILING, WHICHEVER IS LESS.
HF	STROBE LIGHT
	END OF LINE DEVICE

ELECTRICAL SYMBOL SCHEDULE

SYMBOL	DESCRIPTION
A	AMPERE
AFF	ABOVE FINISHED FLOOR – MEASURED FROM FLOOR TO CENTER OF DEVICE, EXCEPT AS OTHERWISE SPECIFICALLY NOTED.
ATS	AUTOMATIC TRANSFER SWITCH
C	CONDUIT
C-FVNR	COMBINATION FVNR AND FUSED SWITCH
C-RVNR	RVNR AND FUSED SWITCH OR CIRCUIT BREAKER
F	FUSE
FCP	FILTER CONTROL PANEL
FVNR	FULL VOLTAGE NON-REVERSIBLE MAGNETIC MOTOR STARTER
G	GROUND
HH	HANDHOLE – SEE DETAILS ON SHEET E10.
MCB	MAIN CIRCUIT BREAKER
MCM	Kcmil (THOUSAND CIRCULAR MILS)
NEC	NATIONAL ELECTRICAL CODE
N	NEUTRAL
NC	NORMALLY CLOSED
NO	NORMALLY OPEN
P	POLE
PH	PHASE
RMC	RIGID SCHEDULE 40 METAL CONDUIT
RTU	REMOTE TERMINAL DATA UNIT – PROVIDE PVX COATING AS REQUIRED BY SPEC SECTION 16110.
RVNR	REDUCED VOLTAGE NON-REVERSIBLE AUTOTRANSFORMER, CLOSED TRANSITION, BAGNETIC STARTER.
SC	BELDEN #83702, TWO-CONDUCTOR, 16 GAUGE SHIELDED CABLE, TEFLON JACKETED, SUITABLE FOR USE IN WET LOCATIONS.
SCIR	SHORT CIRCUIT INTERRUPTING RATING
SO	SPACE ONLY (WITH PROVISIONS FOR FUTURE OVERCURRENT PROTECTIVE DEVICE)
VFD	VARIABLE FREQUENCY DRIVE CONTROLLER WITH DISCONNECT SWITCH.
WP	INDICATES DEVICE TO HAVE WEATHERPROOF COVER
WT	WATERTIGHT NEMA 4X, GASKETED OUTLET BOX OR PULL BOX, AS APPLICABLE.
MS	DOOR SECURITY MAGNETIC SWITCH. SENTROL 1078 SERIES WITH CLOSED CONTACTS WHEN DOOR IS CLOSED. SEE DETAILS THIS SHEET. WIRE TOGETHER WITH 2#14, 1/2" C. TO RTU IN PUMP STATION.
RS	ROLL UP DOOR MONITORING SWITCH. MICRO SWITCH BLZN SERIES ENCLOSED SWITCH WITH STRAIGHT PLUNGER OR ROLLER ARM ACTUATOR AS REQUIRED. MOUNT AT FLOOR ON INSIDE OF FRAME. SWITCH TO BE 'CLOSED' WHEN DOOR IS CLOSED.
RTU	CONTROLS AND TELEMETRY PANEL BY OTHERS. RUN CONDUCTORS AND CABLES, AS SHOWN ON THE DRAWINGS, TO PANEL FOR CONNECTION BY OTHERS. TAG EACH TO INDICATE DEVICE OR EQUIPMENT SERVED.
FMT	FLOWMETER TRANSMITTER – SEE TYPICAL CONNECTION ON SHEET E9.
PMT	PRESSURE METER TRANSMITTER. SEE TYPICAL CONNECTION ON SHEET E3.
	NORMALLY OPEN AUXILIARY CONTACT
	NORMALLY CLOSED AUXILIARY CONTACT
SV	SOLENOID VALVE
BV	BUTTERFLY VALVE PNEUMATIC TYPE, ELECTRICALLY ASSISTED.
MAG	MAG METER. SEE TYPICAL CONNECTION ON SHEET E3
HO	ON-OFF SWITCH. CONTROL STATION.

LIGHTING FIXTURE SCHEDULE

FIXTURE TYPE	MANUFACTURER & CATALOG INFORMATION	LAMPS QTY.	LAMPS TYPE	LAMPS WATTS	BALLAST QTY.	BALLAST TYPE	BALLAST WATTS	TOTAL WATTS	DESCRIPTION
A	LITHONIA DM240 OR EQUAL	2	F32T8	32	1	ELECTRONIC	58	58	TOTALLY ENCLOSED CORROSION RESISTANT
AA	LITHONIA DM240 OR EQUAL	2	F32T8	32	1	ELECTRONIC	74	74	TOTALLY ENCLOSED CORROSION RESISTANT
B	LITHONIA TWL 705120-PE1 OR EQUAL	1	HPS	70	1	HRHPF	90	90	OUTDOOR WEATHERPROOF FIXTURE WITH POLYCARBONATE LENS, PE SWITCH
E	LITHONIA ELUX-N-H OR EQUAL	2	HALOGEN	8	–	–	–	16	EMERGENCY BATTERY LIGHT WITH 90-MINUTE NICKEL-CADMIUM BATTERY PACK.
SA	GE #P15S2A-2-A-M-S-3-GR-U WITH POLE # ARTA 163S5.0ASNA OR EQUAL	2	HPS	150	1	AUTOREG.	170	170	HPS POST-TOP FIXTURE, 16-FOOT, ROUND, 0.188 THICK ALUMINUM POLE, HANDHOLE, P.E. COIL SWITCH. SEE DETAIL ON SHEET E-10.

TYPICAL PANEL DIAGRAM

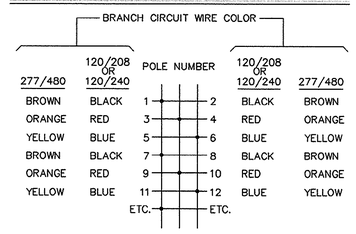

NEUTRAL

120/240 OR 120/208 VOLTS – WHITE

277/480 VOLTS – WHITE WITH IDENTIFIABLE COLOR STRIPE (NOT GREEN). IF NOT AVAILABLE AT TIME OF INSTALLATION, CLEAR USE OF GRAY WITH ELECTRICAL INSPECTOR.

GROUND WIRE SHALL BE GREEN FOR ALL VOLTAGES.

CIRCUITING LEGEND

HOMERUNS TO PANELBOARDS ARE SHOWN AS POLES RATHER THAN CIRCUITS. SIMILARLY, PANEL SCHEDULES LIST POLES RATHER THAN CIRCUITS, BUT INDICATE WHICH POLES ARE COMMON TRIP FORMING TWO AND THREE POLE CIRCUITS. HOMERUN DESIGNATIONS INDICATE PANELBOARD AND POLES TO WHICH PHASE WIRES ARE TO BE CONNECTED. NUMBER OF ARROWS INDICATE NUMBER OF CIRCUITS INVOLVED. CROSS HATCHES, SHOWN ONLY WHEN THE NUMBER OF POLES EXCEEDS THE NUMBER OF CIRCUITS, INDICATE THE NUMBER OF WIRES. FOR EXAMPLE:

SYMBOL	NO. OF POLES	CIRCUITS	PHASE WIRES	NEUTRAL
LP-1	1	1	1	1
LP-1, 3	2	1	2	0
LP-1, 3	2	1	2	1
LP-1, 3, 5	3	1	3	0
LP-1, 3, 5	3	1	3	1
LP-5, 7	2	2	2	1
LP-5, 7, 9	3	3	3	1

FEEDERS:

NO. ( ) INDICATES QUANTITY OF CONDUITS AND CONDUCTORS IN PARALLEL. SEE NEC 250-122, 250-95, 300-20 AND 310-4 FOR SPECIAL REQUIREMENTS. EXAMPLE: 3(3 #3/0, 1 #1/0 N, 1 1G, 2 1/2"C) REQUIRES THREE 2 1/2" CONDUITS EACH HAVING THREE NO. 3/0 PHASE CONDUCTORS, ONE NO. 1/0 NEUTRAL CONDUCTOR AND ONE NO. 1 GROUNDING CONDUCTOR.

EQUIPMENT GROUNDING CONDUCTORS:

EQUIPMENT GROUNDING CONDUCTORS ARE GENERALLY NOT SHOWN ON CIRCUITING PLANS BUT SHALL BE PROVIDED IN THE SIZES AS SCHEDULED ON N.E.C. TABLE 250-122 ON ALL CIRCUITS.

CONTROL SEQUENCE

HEATING:

EUH-1, EUH-2
EUH-1 SHALL CYCLE FAN AND HEAT AS REQUIRED TO MAINTAIN SETPOINT OF THEIR BUILT-IN THERMOSTATS. SET AT 65°F.

VENTILATION:
VF-1, VF-2, VF-3
FAN SHALL HAVE IT'S OWN WALL-MOUNTED THERMOSTAT. THE SETTING FOR VF-1 SHALL BE 80°F. WHEN THE FAN STARTS THE MOTOR OPERATED DAMPER IN THE INTAKE LOUVER SHALL OPEN.

GENERAL NOTES

1. THE ELECTRICAL CONTRACTOR SHALL COORDINATE THE LOCATION, EXACT CONFIGURATION AND REQUIREMENTS OF INSTRUMENTS AND EQUIPMENT BEING FURNISHED UNDER OTHER SECTIONS OF SPECIFICATIONS.
2. ALL CIRCUITS RATED 115 VOLTS OR HIGHER SHALL BE PROVIDED WITH SEPARATE EQUIPMENT GROUNDING CONDUCTORS BONDED TO ALL ENCLOSURES AND BOXES ASSOCIATED WITH THE CIRCUIT.
3. PVC CONDUIT IS NOT PERMITTED FOR SIGNAL (INSTRUMENTATION) CIRCUITS RUN OUTSIDE OF BUILDING – USE RMC CONDUIT.
4. RMC INSTALLED UNDERGROUND IN DIRECT CONTACT WITH EARTH OR EXPOSED TO WEATHER, OR IN CHLORINE BUILDING SHALL BE PVC COATED.

45-003-04 4/53

REVISIONS

SYM.	DESCRIPTION	DATE	BY
	AS-BUILT	8/27/01	CAR

SOUTH CAROLINA PROFESSIONAL ENGINEER REGISTERED NO. 12760 DENNIS LOVETT

99042

HOBBS, UPCHURCH & ASSOCIATES, P.A.
CONSULTING ENGINEERS
MYRTLE BEACH, SOUTH CAROLINA 29577

SYMBOL SCHEDULE, EQUIPMENT SCHEDULE AND DETAILS

TIP-TOP TREE FARM EFFLUENT LAND APPLICATION PROJECT
GRAND STRAND WATER AND SEWER AUTHORITY

DATE: SEPTEMBER 8, 1999
DESIGNED: DL
DRAWN: D.B.M.
CHECKED: DL
SCALE: AS SHOWN
SHEET NO. E1
OF: 10

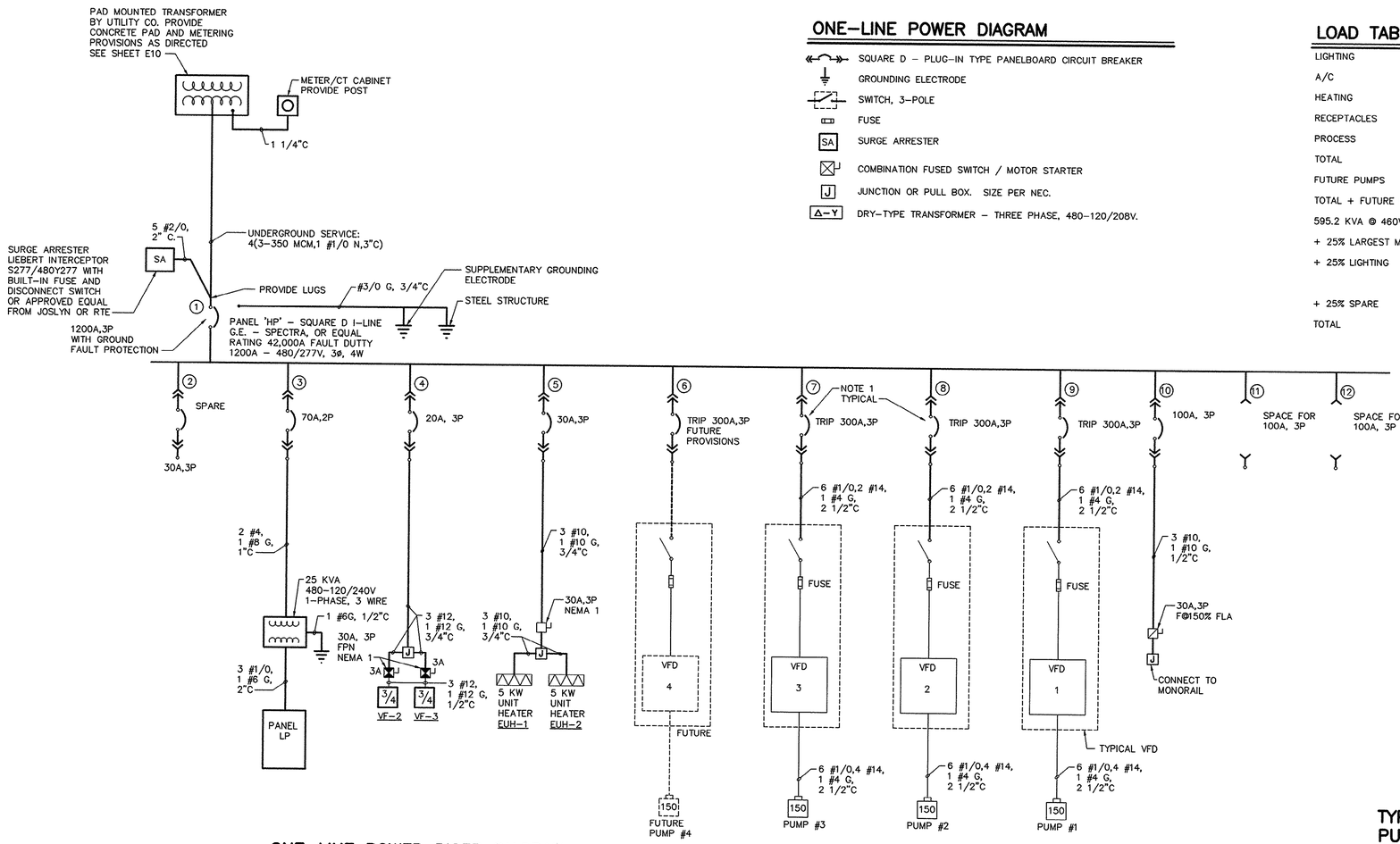

ONE-LINE POWER RISER DIAGRAM

NOT TO SCALE

NOTE:
1. BREAKERS FOR PUMPS SHALL HAVE PROVISIONS FOR PAD LOCKING IN "OFF" POSITION. ALSO, PROVIDE AUXILIARY 5A, 120V CONTACT ON EACH CIRCUIT BREAKER TO OPEN WHEN BREAKER IS IN OPEN POSITION.
2. ALL BREAKERS SHALL BE PLUG-IN.

ONE-LINE POWER DIAGRAM

- SQUARE D - PLUG-IN TYPE PANELBOARD CIRCUIT BREAKER
- GROUNDING ELECTRODE
- SWITCH, 3-POLE
- FUSE
- SA — SURGE ARRESTER
- COMBINATION FUSED SWITCH / MOTOR STARTER
- J — JUNCTION OR PULL BOX. SIZE PER NEC.
- Δ-Y — DRY-TYPE TRANSFORMER - THREE PHASE, 480-120/208V.

LOAD TABULATION

LIGHTING	1.3	KVA
A/C	1.7	KVA
HEATING	4.4	KVA
RECEPTACLES	1.6	KVA
PROCESS	442.8	KVA
TOTAL	451.8	KVA
FUTURE PUMPS	143.4	KVA
TOTAL + FUTURE PUMP	595.2	KVA
595.2 KVA @ 460V, 3ø	747.7	A
+ 25% LARGEST MOTOR	45.0	A
+ 25% LIGHTING	2.7	A
	795.4	A
+ 25% SPARE	198.9	A
TOTAL	994.25	A

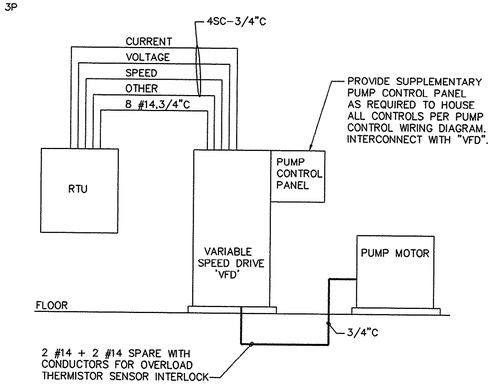

TYPICAL CONTROL WIRING RISER DIAGRAM PUMPS NO. 1, NO. 2 AND NO. 3

NOT TO SCALE

NOTE:
1. CONNECT TO RTU AND TO VFD AS DIRECTED BY EQUIPMENT SUPPLIER. LEAVE 6-FOOT OF SLACK AT EACH END.

LOAD (KVA) PH1	LOAD (KVA) PH2	DESCRIPTION	WIRE SIZE	BRKR RAT'G	CKT. NO.	CKT. NO.	BRKR RAT'G	WIRE SIZE	DESCRIPTION	LOAD (KVA) PH1	LOAD (KVA) PH2
0.7		LIGHTING	12	20/1	1	2	30/2	10	AC-1	2.3	
	0.7	LIGHTING	12	20/1	3	4	.	10	.		2.3
0.7		RECEPTACLES	12	20/1	5	6	30/2	10	AC-2	2.3	
	0.9	RECEPTACLES	12	20/1	7	8	.	10	.		2.3
0.2		RECEPTACLES	12	20/1	9	10	30/2	10	AC-3	2.3	
	0.2	LOUVERS	12	20/1	11	12	.	10	.		2.3
0.1		FAC	12	20/1	13	14	20/1	12	PRESSURE TRANS.	0.0	
	0.1	RTU	12	20/1	15	16	20/1	.	SPARE		0.0
0.0		SPARE	.	20/1	17	18	20/1	.	SPARE	0.0	
	0.0	SPARE	.	20/1	19	20	20/1	.	SPARE		0.0
0.0		SPARE	.	20/1	21	22	20/1	.	SPARE	0.0	
	0.0	SPARE	.	20/1	23	24	20/1	.	SPARE		0.0
0.0		SPARE	.	20/1	25	26	20/1	.	SPARE	0.0	
	0.0	SPARE	.	20/1	27	28	20/1	.	SPARE		0.0
0.0		SPARE	.	20/1	29	30	20/1	.	SPARE	0.0	
	0.0	SO	.	.	31	32	.	.	SO		0.0
0.0		SO	.	.	33	34	.	.	SO	0.0	
	0.0	SO	.	.	35	36	.	.	SO		0.0
0.0		SO	.	.	37	38	.	.	SO	0.0	
	0.0	SO	.	.	39	40	.	.	SO		0.0
0.0		SO	.	.	41	42	.	.	SO	0.0	

TYPE: BRANCH CIRCUIT
MOUNTING: SURFACE
SUPPLY: 240/120V, 1-PH, 3W
MAINS: 150A MCB
SCIR: 10,000A
NOTES:
1. WITH EQUIPMENT GROUND BUS.

GROSS PHASE TOTALS
PH1= 8.6 KVA
PH2= 8.8 KVA

CONNECTED LOAD	72.5 AMPERES
LIGHTING	1.4 KVA
HEATING	0.0 KVA
A/C MOTORS & HEAT PUMPS	13.8 KVA
AIR HANDLING & EXH FANS	0.2 KVA
RECEPTACLES	1.8 KVA
ELECTRIC WATER HEATING	0.0 KVA
ELEVATORS	0.0 KVA
FOOD PROCESSING	0.0 KVA
PROCESS	0.0 KVA
MISCELLANEOUS	0.2 KVA
TOTAL CONNECTED LOAD	17.4 KVA

PANEL LP

THESE DRAWINGS REFLECT
AS-BUILT
CONDITIONS

REVIEWED BY: _____
INSPECTIONS DATE

REVIEWED BY: _____
ENGINEERING DATE

GRAND STRAND WATER AND SEWER AUTHORITY

SYM.	DESCRIPTION	DATE	BY
	AS-BUILT	8/27/01	CAR

REVISIONS

SOUTH CAROLINA PROFESSIONAL ENGINEER REGISTERED NO. 12715 DAMASO 22487 99042

HOBBS, UPCHURCH & ASSOCIATES, P.A.
CONSULTING ENGINEERS
MYRTLE BEACH, SOUTH CAROLINA 29577

IRRIGATION BOOSTER PUMP STATION. ONE-LINE-POWER DIAGRAM

TIP-TOP TREE FARM EFFLUENT LAND APPLICATION PROJECT
GRAND STRAND WATER AND SEWER AUTHORITY

DATE: SEPTEMBER 8, 1999
DESIGNED: DL
DRAWN: D.B.M.
CHECKED: DL
SCALE: AS SHOWN
SHEET NO. E2
OF: 10

45-003-044/53

HOBBS, UPCHURCH & ASSOC. MB J:\GS9901\800\820\ELECT\E2.dwg EDITED BY: ARABON DATE: 08/29/01 TIME: 11:31 XREFS: J:\GS9901\800\825\ELECT\X-TITLE.dwg Layout: Model

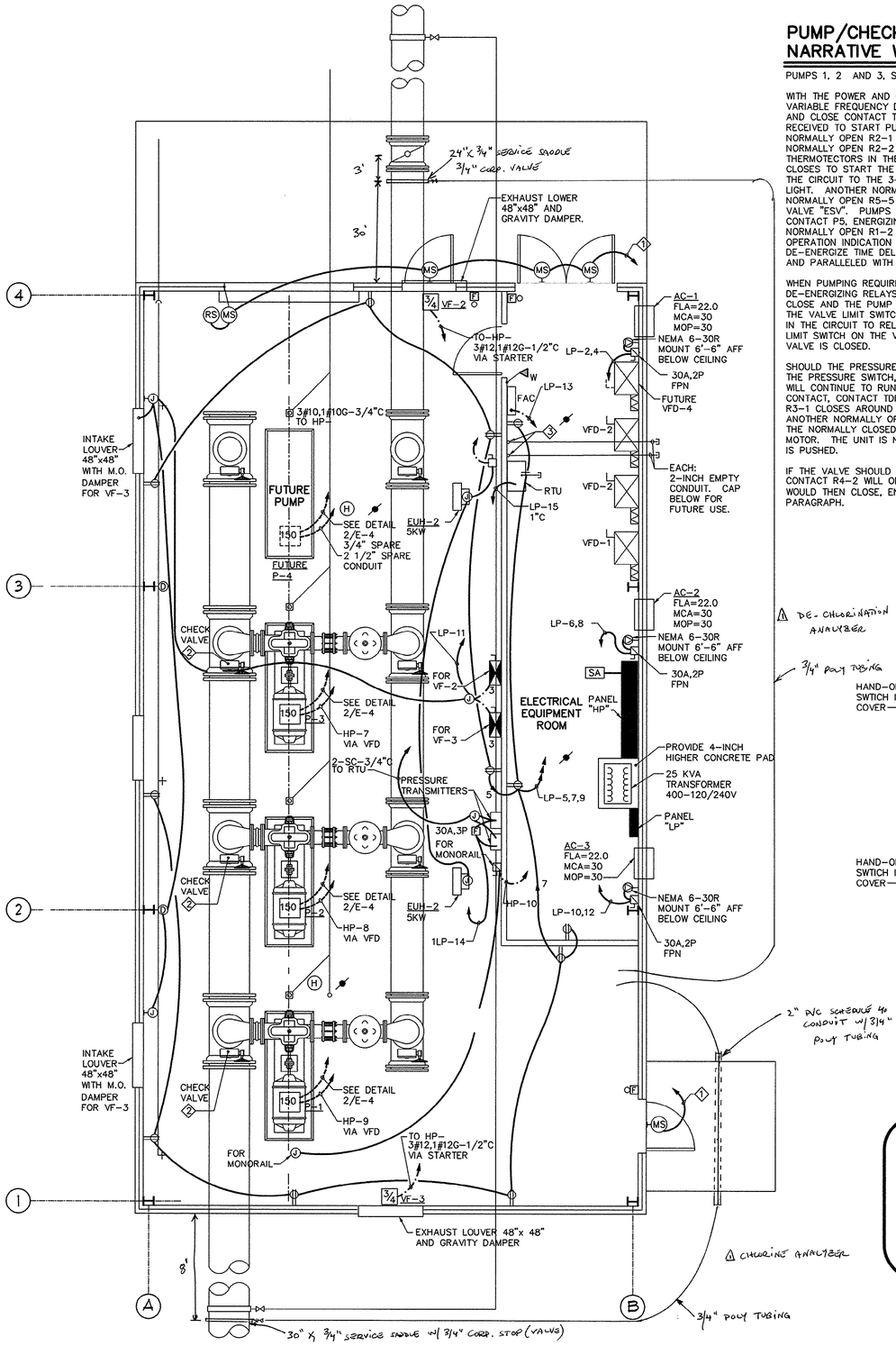

PUMP STATION – ELECTRICAL PLAN

1 / E3 SCALE: 1/4" = 1'-0"

1. CONNECT TO RTU. SEE DETAIL 3/E3.
2. REFER TO PUMP CONTROL DIAGRAMS FOR ADDITIONAL WIRING IN THIS AREA.
3. STUB UP CONDUITS 12" AFF AND CAP. FOR FUTURE.

PUMP/CHECK VALVE CONTROL NARRATIVE WITH VARIABLE FREQUENCY DRIVE

PUMPS 1, 2 AND 3, SEQUENCE OF OPERATION:

WITH THE POWER AND CONTROL SOURCES AVAILABLE AND THE AUXILIARY SWITCH ON THE VARIABLE FREQUENCY DRIVE DISCONNECT, CLOSED TIME DELAY RELAY "TDR" WILL TIME OUT AND CLOSE CONTACT TDR/TC. WITH THE HOA IN THE AUTO POSITION AND A REMOTE SIGNAL IS RECEIVED TO START PUMP, CONTACT RTU WILL CLOSE, ENERGIZING RELAYS TDR1 AND R2. ONE NORMALLY OPEN R2-1 CONTACT CLOSES TO ENERGIZE TIME DELAY RELAY TDR2. ANOTHER NORMALLY OPEN R2-2 CONTACT CLOSES TO ENERGIZE RELAY R5 PROVIDED THE THERMOTECTORS IN THE MOTOR WINDING IS CLOSED. ONE NORMALLY OPEN R5-1 CONTACT CLOSES TO START THE PUMP. OTHER NORMALLY OPEN R5-4 AND R5-2 CONTACTS CLOSES IN THE CIRCUIT TO THE 3-WAY NORMAL SOLENOID VALVE "NSV", RUN TIME METER, AND PILOT LIGHT. ANOTHER NORMALLY OPEN R5-3 CONTACT CLOSES TO ENERGIZE RELAY R4. ANOTHER NORMALLY OPEN R5-5 CONTACT CLOSES ENERGIZING EMERGENCY CLOSING 2-WAY SOLENOID VALVE "ESV". PUMPS STARTS AND BUILDS UP PRESSURE TO CLOSE PRESSURE SWITCH CONTACT P5, ENERGIZING RELAY R1 AND THE NORMAL SOLENOID TO OPEN THE VALVE. A NORMALLY OPEN R1-2 CONTACT CLOSES TO SEND A PUMP CONTROL VALVE OPEN AND IN OPERATION INDICATION SIGNAL TO RTU. A NORMALLY CLOSED R1-1 CONTACT OPENS TO DE-ENERGIZE TIME DELAY RELAY TDR1. A NORMALLY OPEN CONTACT R4-1 IS NOW CLOSED AND PARALLELED WITH CONTACT R2-2 IN CIRCUIT TO RELAY R5.

WHEN PUMPING REQUIREMENTS ARE SATISFIED, A SIGNAL IS SENT AND CONTACT RTU OPENS, DE-ENERGIZING RELAYS R1, R2, AND NORMAL SOLENOID VALVE "NSV". THE VALVE STARTS TO CLOSE AND THE PUMP MOTOR CONTINUES TO RUN. WHEN THE VALVE REACHES 95% CLOSED, THE VALVE LIMIT SWITCH MOMENTARILY OPENS TO DE-ENERGIZE RELAY R4. THE R4-1 CONTACT IN THE CIRCUIT TO RELAY R5 OPENS, STOPPING THE MOTOR, AND THE VALVE SHUTS. ANOTHER LIMIT SWITCH ON THE VALVE CLOSES ITS CONTACT TO SEND AN INDICATION TO RTU THAT THE VALVE IS CLOSED.

SHOULD THE PRESSURE DROP, IN THE DISCHARGE SIDE OF THE PUMP, BELOW THE SETTING ON THE PRESSURE SWITCH, CONTACT P5 WILL OPEN, CAUSING TDR1 TO TIME OUT. THE MOTOR WILL CONTINUE TO RUN. WHEN THE RELAY TIMES OUT THROUGH THE CLOSING OF R1-1 CONTACT, CONTACT TDR1-TC WILL CLOSE, ENERGIZING RELAY R3. NORMALLY OPEN CONTACT R3-1 CLOSES AROUND CONTACT TDR1-TC, LOCKING RELAY R3 IN THE ENERGIZED POSITION. ANOTHER NORMALLY OPEN R3-2 CONTACT CLOSES, SENDING A PUMP FAILURE ALARM TO RTU. THE NORMALLY CLOSED R3-3 CONTACT OPENS, DE-ENERGIZING RELAY R5, STOPPING THE MOTOR. THE UNIT IS NOW LOCKED OUT AND CANNOT BE RESTARTED UNTIL THE MANUAL RESET IS PUSHED.

IF THE VALVE SHOULD CLOSE DURING NORMAL PUMPING OPERATION, THE NORMALLY CLOSED CONTACT R4-2 WILL OPEN IN CIRCUIT TO TDR2 AND CAUSE IT TO TIME OUT. CONTACT TDR2-TC WOULD THEN CLOSE, ENERGIZING RELAY R3, CAUSING THE SAME FUNCTIONS PER THE ABOVE PARAGRAPH.

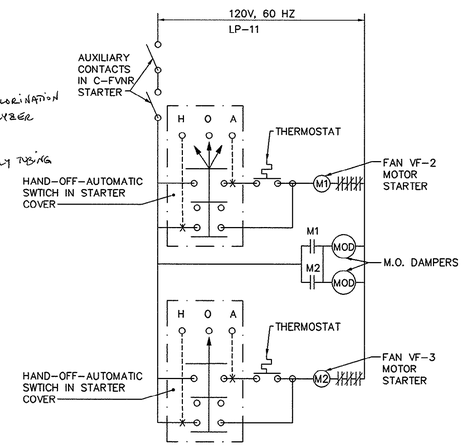

FANS VF-2 AND VF-3 CONTROL WIRING DIAGRAM

NOT TO SCALE

THESE DRAWINGS REFLECT
AS-BUILT
CONDITIONS

REVIEWED BY: _____
INSPECTIONS DATE

REVIEWED BY: _____
ENGINEERING DATE

GRAND STRAND WATER AND SEWER AUTHORITY

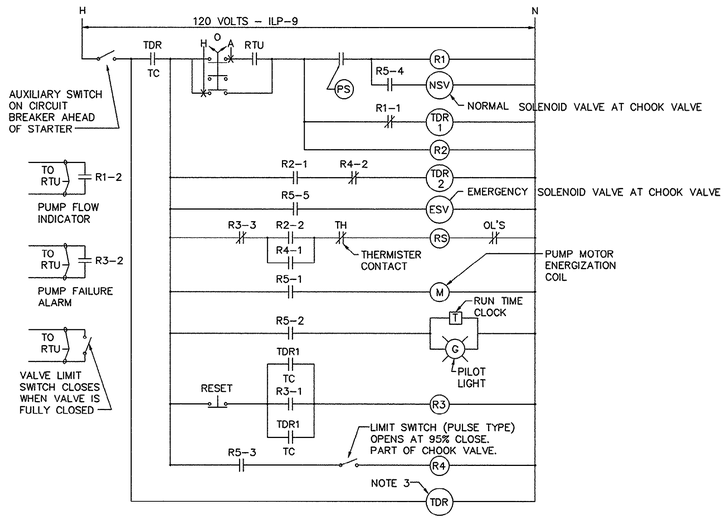

TYPICAL PUMP/CHECK VALVE CONTROL WIRING DIAGRAM

2 / E3 NOTE TO SCALE

NOTES:
1. DIAGRAM SHOWN IS FOR PUMP #1. DIAGRAM FOR PUMPS #2 AND #3. IS SIMILAR.
2. SET (TDR) RELAYS AS FOLLOWS:
   PUMP #1 = P-1 = 10 SECONDS
   PUMP #2 – P-2 = 20 SECONDS
   PUMP #3 – P-3 = 30 SECONDS
3. ALL RELAYS, WIRING AND CONTROL DEVICES TO BE PROVIDED AS PART OF PUMP CONTROL PANEL – UNDER DIVISION 16 – ELECTRICAL. ONE PANEL IS ACCEPTABLE, AT CONTRACTOR'S OPTION, TO HOUSE CONTROLS FOR ALL THREE PUMPS.

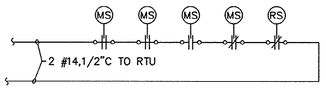

PUMP STATION DOOR SECURITY WIRING DIAGRAM

3 / E3 NOT TO SCALE

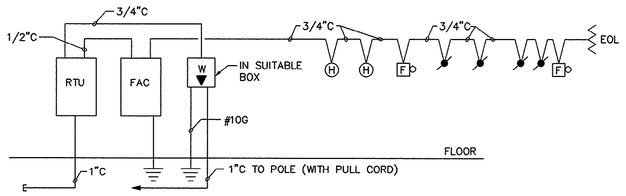

FIRE DETECTION TEL. CONDUIT SYSTEM RISER DIAGRAM

4 / E3 NOT TO SCALE

NOTES:
1. FIRE ALARM SYSTEM SHALL BE U.L. AND F.M. APPROVED, 24V. DC POWER. PROVIDE 24-HOUR BATTERY POWER BACKUP. PROVIDE MANUFACTURERS FIELD CHECK AND START-UP SERVICE TO ASSURE PROPER OPERATION. PROVIDE A COMPLETE FIRE ALARM SYSTEM INCLUDING ALL REQUIRED EQUIPMENT AND WIRING IN CONDUIT FOR A COMPLETE INSTALLATION. WIRING SHALL BE AS DIRECTED BY SYSTEM MANUFACTURER.

45-003-04B/53

SYM.	DESCRIPTION	DATE	BY
1	AS-BUILT CHANGED DECIMAL ARAUZ	8/27/01	CAR

REVISIONS

SOUTH CAROLINA PROFESSIONAL ENGINEER REGISTERED NO. 12763 CHARLES A. ARAUZ

99042

HOBBS, UPCHURCH & ASSOCIATES, P.A.
CONSULTING ENGINEERS
MYRTLE BEACH, SOUTH CAROLINA 29577

IRRIGATION BOOSTER PUMP STATION ELECTRICAL PLAN AND DIAGRAMS

TIP-TOP TREE FARM EFFLUENT LAND APPLICATION PROJECT
GRAND STRAND WATER AND SEWER AUTHORITY

DATE:	SEPTEMBER 8, 1999
DESIGNED:	DL
DRAWN:	D.B.M.
CHECKED:	DL
SCALE:	AS SHOWN
SHEET NO.	E3
OF:	10

HOBBS, UPCHURCH & ASSOC. MB J:\GS9901\800\820\ELECT\E3.dwg EDITED BY: ARABON DATE: 08/29/01 TIME: 11:33 XREFS: J:\GS9901\800\825\ELECT\X-TITLE.dwg Layout: Model

THESE DRAWINGS REFLECT
AS-BUILT
CONDITIONS

REVIEWED BY: _____
INSPECTIONS DATE

REVIEWED BY: _____
ENGINEERING DATE

GRAND STRAND WATER AND SEWER AUTHORITY

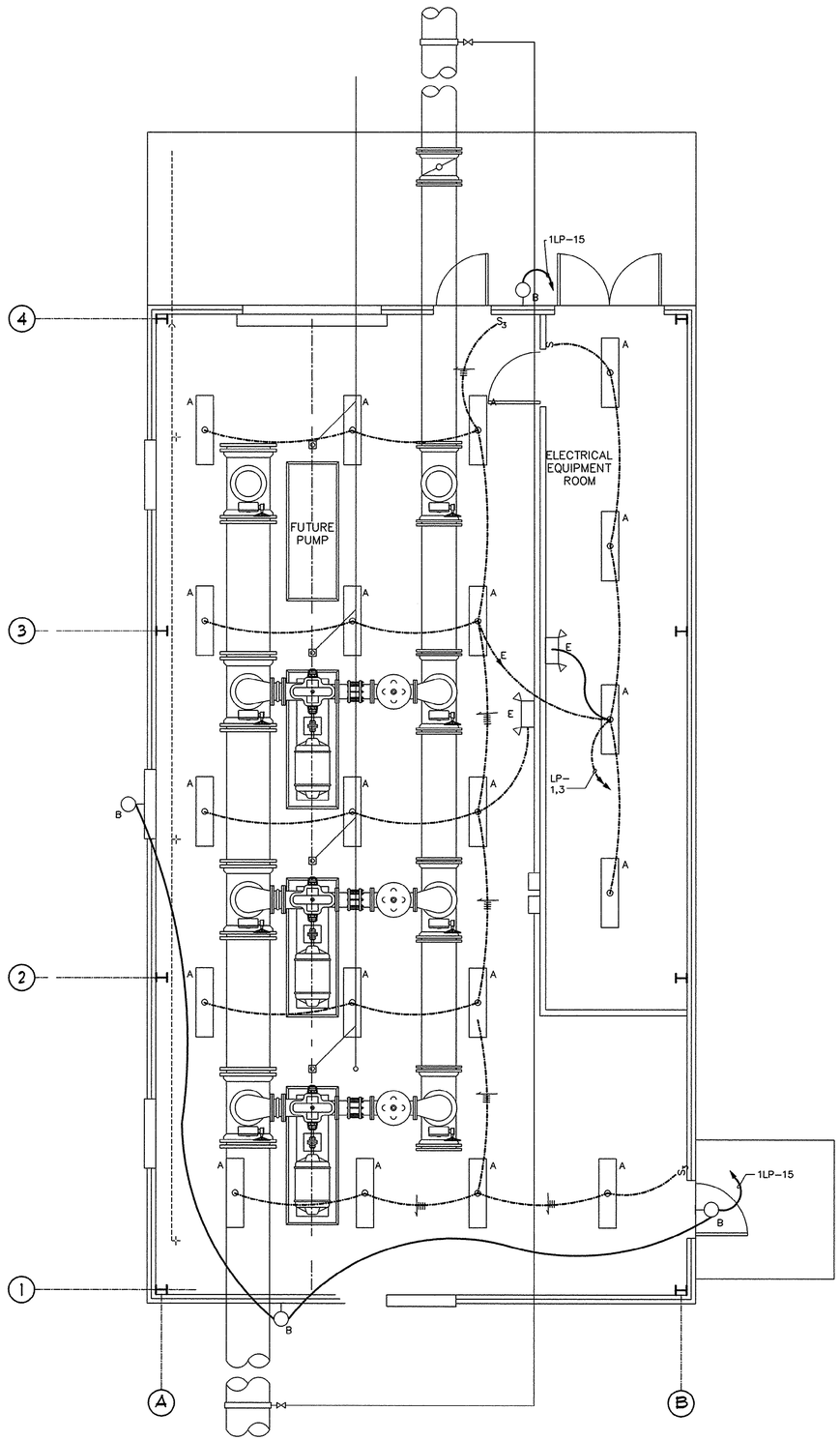

PUMP STATION – ELECTRICAL PLAN

SCALE: 1/4" = 1'-0"

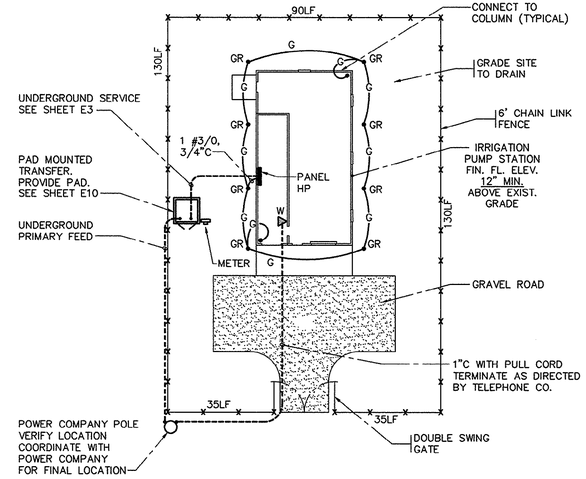

IRRIGATION PUMP STATION – SITE PLAN

N.T.S.

REVISIONS			
SYM.	DESCRIPTION	DATE	BY
	AS-BUILT	8/27/01	CAR

SOUTH CAROLINA PROFESSIONAL ENGINEER REGISTERED NO. 12783 CARL A. SMITH

99042

HOBBS, UPCHURCH & ASSOCIATES, P.A.
CONSULTING ENGINEERS
MYRTLE BEACH, SOUTH CAROLINA 29577

PUMP STATION ELECTRICAL LIGHTING PLAN

TIP-TOP TREE FARM EFFLUENT LAND APPLICATION PROJECT

GRAND STRAND WATER AND SEWER AUTHORITY

DATE:	SEPTEMBER 8, 1999
DESIGNED:	DL
DRAWN:	D.B.M.
CHECKED:	DL
SCALE:	AS SHOWN
SHEET NO.	E4
OF:	10

45-003-0411/53

HOBBS, UPCHURCH & ASSOC. MB J:\GS9901\800\820\ELECT\E4.dwg EDITED BY: ARABON DATE: 08/29/01 TIME: 11:34 XREFS: J:\GS9901\800\825\ELECT\X-TITLE.dwg Layout: Model

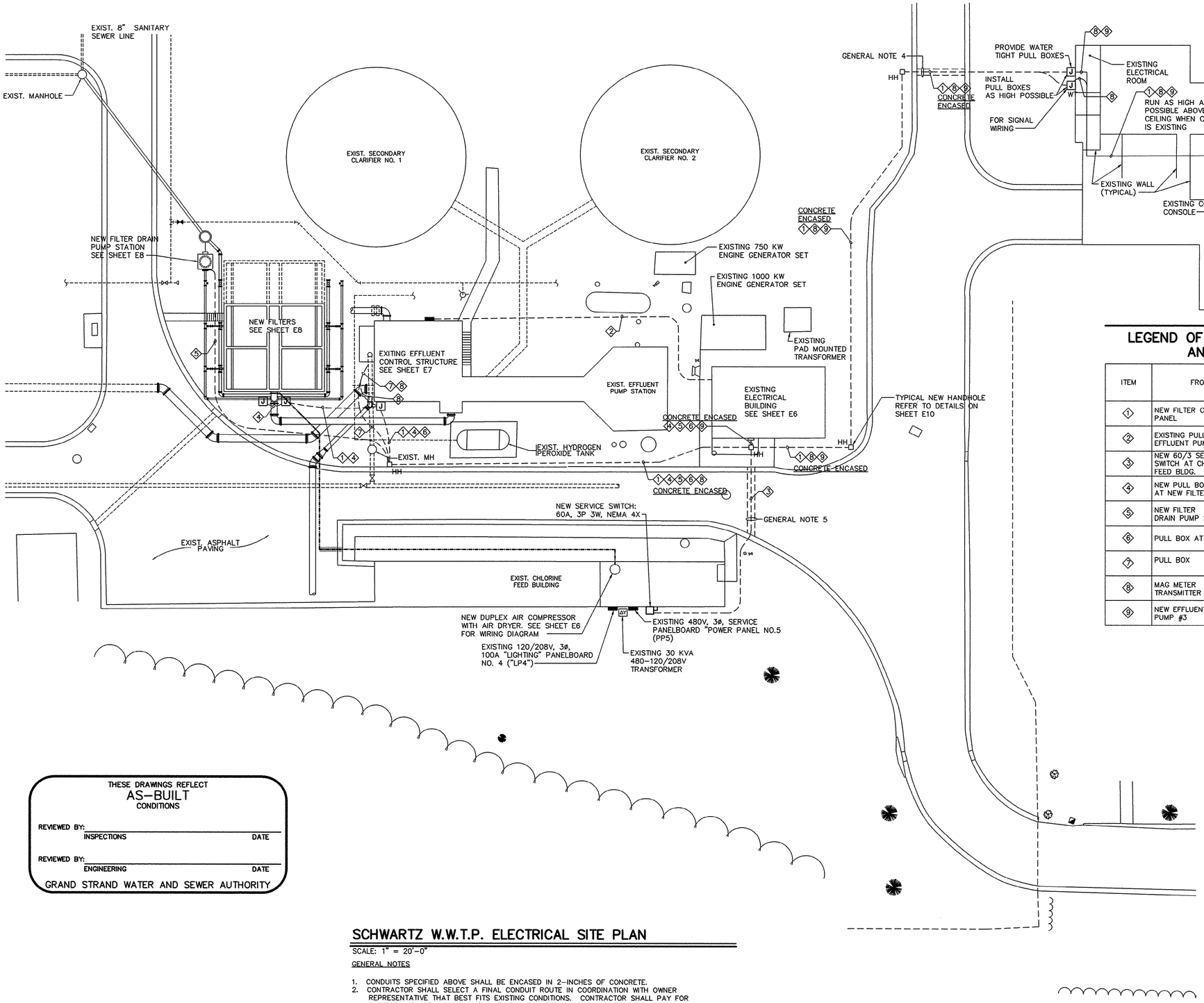

LEGEND OF NEW SITE CIRCUITS AND CONDUITS

ITEM	FROM	TO	CONDUIT AND WIRING
1	NEW FILTER CONTROL PANEL	OPERATOR BUILDING	2"C W/PULL CORD FOR CONTROL WIRING BY OTHERS.
2	EXISTING PULL BOX AT EFFLUENT PUMP STATION	EXISTING EFFLUENT PUMP STATION CONTROL PANEL AT ELECTRICAL BLDG.	EXISTING 2"C W/ NEW 3#2/0,8#14- CONNECT TO NEW PUMP #3 STARTER.
3	NEW 60/3 SERVICE SWITCH AT CHLORINE FEED BLDG.	NEW PANEL '99HE'	3#6, 1#8G-1"C
4	NEW PULL BOX AT NEW FILTERS	PANEL PPEX1 FOR 120V CONTROL POWER RECEPT MAG METER+LTG. FIXT.	8#8, 1#10G-1 1/4"C FOR CIR. PPEX1-9,11,13,15,17,19
5	NEW FILTER DRAIN PUMP STATION	NEW PANEL '99HE'	3#8, 1#10G-1"C
6	PULL BOX AT FILTER	ELECTRICAL BUILDING	1"C WITH PULL CORD-SPARE
7	PULL BOX	MAG METER TRANSMITTER	2 #10,1 #10 G, 3/4"C PPEX1-15
8	MAG METER TRANSMITTER	OPERATIONS BUILDING CONTROL CONSOLE	2-SC-1"C
9	NEW EFFLUENT PUMP #3	OPERATIONS BUILDING CONTROL CONSOLE	6 #14,1"C

THESE DRAWINGS REFLECT
AS-BUILT
CONDITIONS

REVIEWED BY: _____
INSPECTIONS DATE

REVIEWED BY: _____
ENGINEERING DATE

GRAND STRAND WATER AND SEWER AUTHORITY

SCHWARTZ W.W.T.P. ELECTRICAL SITE PLAN

SCALE: 1" = 20'-0"

GENERAL NOTES

1. CONDUITS SPECIFIED ABOVE SHALL BE ENCASED IN 2-INCHES OF CONCRETE.
2. CONTRACTOR SHALL SELECT A FINAL CONDUIT ROUTE IN COORDINATION WITH OWNER REPRESENTATIVE THAT BEST FITS EXISTING CONDITIONS. CONTRACTOR SHALL PAY FOR THE SERVICES OF A CONDUIT/PIPING LOCATION OUTFIT TO IDENTIFY AND WORKS EXISTING UNDERGROUND UTILITIES ALONG FINAL NEW CONDUIT ROUTE.
3. CONTRACTOR SHALL WATERPROOF ALL PENETRATIONS INTO EXISTING BUILDING.
4. CONDUIT IN EXISTING BUILDINGS SHALL BE RUN AS HIGH AS POSSIBLE, PARALLEL, AND PERPENDICULAR TO WALLS AND CEILING. RUN CONDUIT ABOVE CEILING IF LAY-IN CEILING EXISTS.
5. BORE UNDER EXISTING ROAD AS THE PREFERRED METHOD TO CROSS UNDER ROAD SURFACES, OTHERWISE CUT, TRENCH, BACKFILL AND PATCH TO RESTORE PAVEMENT TO ORRIGINAL CONDITION.

45-003-048/53

REVISIONS			
STM.	DESCRIPTION	DATE	BY
	AS-BUILT	8/27/01	CAR

SOUTH CAROLINA REGISTERED PROFESSIONAL ENGINEER NO. 12783 DAVID LEE CAST

99042

HOBBS, UPCHURCH & ASSOCIATES, P.A.
CONSULTING ENGINEERS
MYRTLE BEACH, SOUTH CAROLINA 29577

SCHWARTZ W.W.T.P.
ELECTRICAL
SITE PLAN

TIP-TOP TREE FARM
EFFLUENT LAND
APPLICATION PROJECT
GRAND STRAND WATER
AND SEWER AUTHORITY

DATE:	SEPTEMBER 8, 1999
DESIGNED:	DL
DRAWN:	D.B.M.
CHECKED:	DL
SCALE:	AS SHOWN
SHEET NO.	E5
OF:	10

HOBBS, UPCHURCH & ASSOC. MB J:\GS9901\800\825\ELECT\E5.dwg EDITED BY: ARABON DATE: 08/29/01 TIME: 11:36 XREFS: J:\GS9901\800\825\ELECT\X-TITLE.dwg Layout: Model

LOAD (KVA) A	B	C	DESCRIPTION	WIRE SIZE	BRKR RAT'G	CKT. NO.	CKT. NO.	BRKR RAT'G	WIRE SIZE	DESCRIPTION	LOAD (KVA) A	B	C
7.5			CHLORINE BUILDING	6	60/3	1	2	30/3	8	FILTER DRAIN	4.1		
	7.5		COMPRESSOR	6	.	3	4	.	8	PUMP STATION		4.1	
		7.5	.	6	.	5	6	.	8	.			4.1
0.0			SPARE	.	30/3	7	8	30/3	.	SPARE	0.0		
	0.0		.	.	.	9	10	.	.	.		0.0	
		0.0	.	.	.	11	12	.	.	.			0.0
0.0			SO	.	.	13	14	.	.	SO	0.0		
	0.0		SO	.	.	15	16	.	.	SO		0.0	
		0.0	SO	.	.	17	18	.	.	SO			0.0
			.	.	.	19	20	.	.	.			
			.	.	.	21	22	.	.	.			
			.	.	.	23	24	.	.	.			
			.	.	.	25	26	.	.	.			
			.	.	.	27	28	.	.	.			
			.	.	.	29	30	.	.	.			
			.	.	.	31	32	.	.	.			
			.	.	.	33	34	.	.	.			
			.	.	.	35	36	.	.	.			
			.	.	.	37	38	.	.	.			
			.	.	.	39	40	.	.	.			
			.	.	.	41	42	.	.	.			

TYPE: BRANCH CIRCUIT
MOUNTING: SURFACE
SUPPLY: 480V, 3-PH, 3W
MAINS: 100A MLO
SCIR: 42,000A
NOTES:
1. WITH EQUIPMENT GROUND BUS.

GROSS PHASE TOTALS
A= 11.6 KVA
B= 11.6 KVA
C= 11.6 KVA

CONNECTED LOAD	41.9 AMPERES
LIGHTING	0.0 KVA
HEATING	0.0 KVA
A/C MOTORS & HEAT PUMPS	0.0 KVA
AIR HANDLING & EXH FANS	0.0 KVA
RECEPTACLES	0.0 KVA
ELECTRIC WATER HEATING	0.0 KVA
ELEVATORS	0.0 KVA
FOOD PROCESSING	0.0 KVA
PROCESS	12.3 KVA
MISCELLANEOUS	22.5 KVA
TOTAL CONNECTED LOAD	34.8 KVA

PANEL 99HE

LOAD (KVA) A	B	C	DESCRIPTION	WIRE SIZE	BRKR RAT'G	CKT. NO.	CKT. NO.	BRKR RAT'G	WIRE SIZE	DESCRIPTION	LOAD (KVA) A	B	C
1.3			ENGINE BLOCK HEATER	*	20/3	1	2	20/3	*	ENGINE BLOCK HEATER	1.3		
	1.3		.	*	.	3	4	.	*	PUMP STATION		1.3	
		1.3	.	*	.	5	6	.	*	.			1.3
0.2			BATTERY CHARGER	*	15/1	7	8	15/1	*	FLOW METER	0.1		
	0.5		NEW FILTER C.P.-W	8	20/1	9	10	15/1	*	FLOW METER		0.1	
		0.5	NEW FILTER C.P.-E	8	20/1	11	12	15/1	.	SPARE			0.0
0.4			NEW FILTER AREA REC.	8	20/1	13	14	20/1	.	SPARE	0.0		
	0.1		NEW MAG METER	8	20/1	15	16	20/1	.	SPARE		0.0	
		0.1	AREA LIGHTING	8	20/2	17	18	20/1	.	SPARE			0.0
0.1			.	8	.	19	20	20/1	.	SPARE	0.0		
	0.0		SPARE	.	.	21	22	20/1	.	SPARE		0.0	
		0.0	SPARE	.	.	23	24	20/1	.	SPARE			0.0
			.	.	.	25	26	.	.	.			
			.	.	.	27	28	.	.	.			
			.	.	.	29	30	.	.	.			
			.	.	.	31	32	.	.	.			
			.	.	.	33	34	.	.	.			
			.	.	.	35	36	.	.	.			
			.	.	.	37	38	.	.	.			
			.	.	.	39	40	.	.	.			
			.	.	.	41	42	.	.	.			

TYPE: BRANCH CIRCUIT
MOUNTING: SURFACE
SUPPLY: 208/120V, 3-PH, 4W
MAINS: 70A, MCB
SCIR: 10,000A
NOTES:
1. WITH EQUIPMENT GROUND BUS.
* INDICATES EXISTING CIRCUIT. REMOVE FROM OLD PANEL AND CONNECT TO NEW PANEL.

GROSS PHASE TOTALS
A= 3.4 KVA
B= 3.3 KVA
C= 3.3 KVA

CONNECTED LOAD	27.5 AMPERES
LIGHTING	0.2 KVA
HEATING	0.0 KVA
A/C MOTORS & HEAT PUMPS	0.0 KVA
AIR HANDLING & EXH FANS	0.0 KVA
RECEPTACLES	0.4 KVA
ELECTRIC WATER HEATING	8.0 KVA
ELEVATORS	0.0 KVA
FOOD PROCESSING	0.0 KVA
PROCESS	0.0 KVA
MISCELLANEOUS	1.4 KVA
TOTAL CONNECTED LOAD	9.9 KVA

PANEL PPEX1

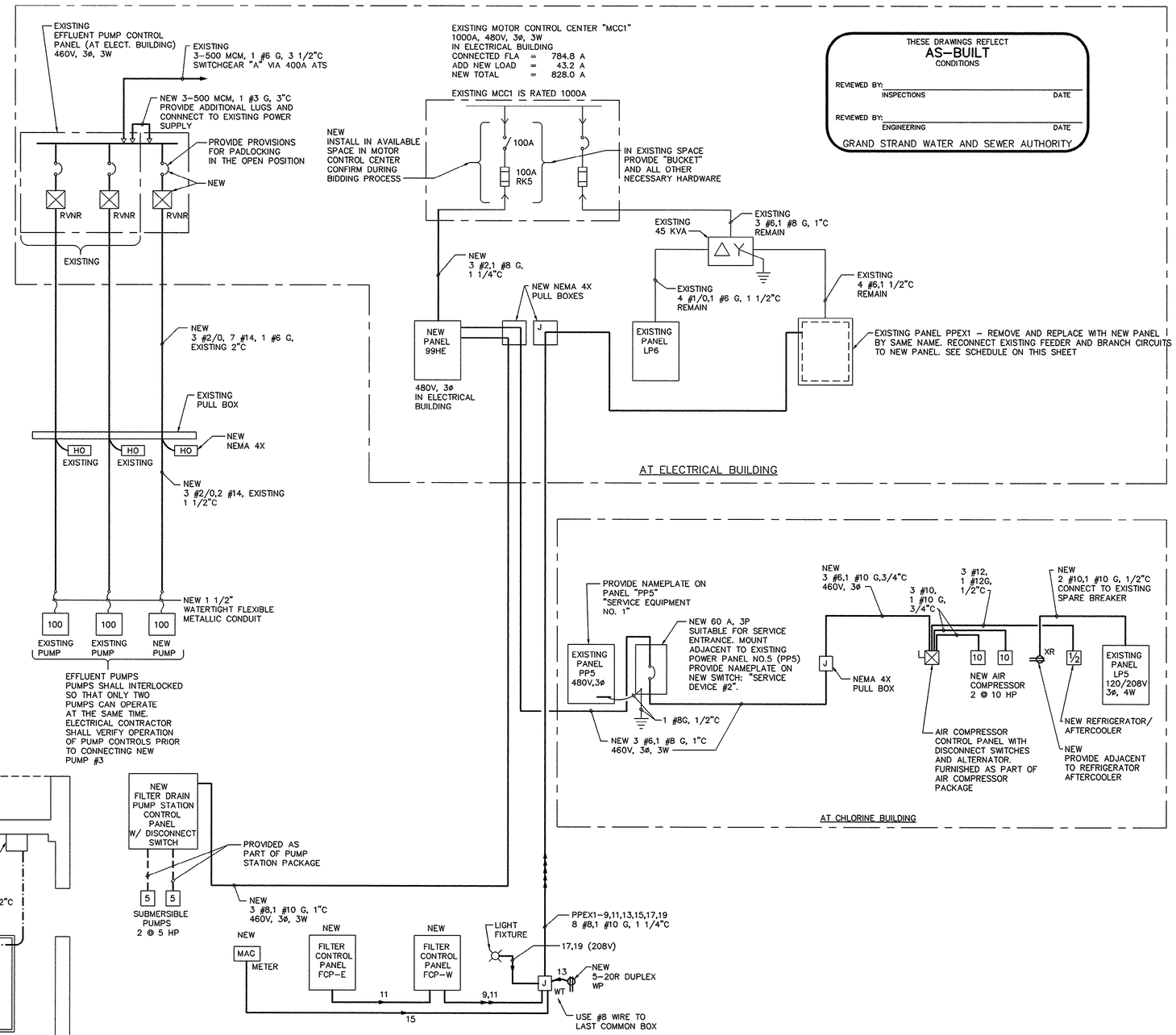

POWER RISER DIAGRAM - NEW POWER CIRCUITS AT SCHWARTZ W.W.T.P.

NOT TO SCALE

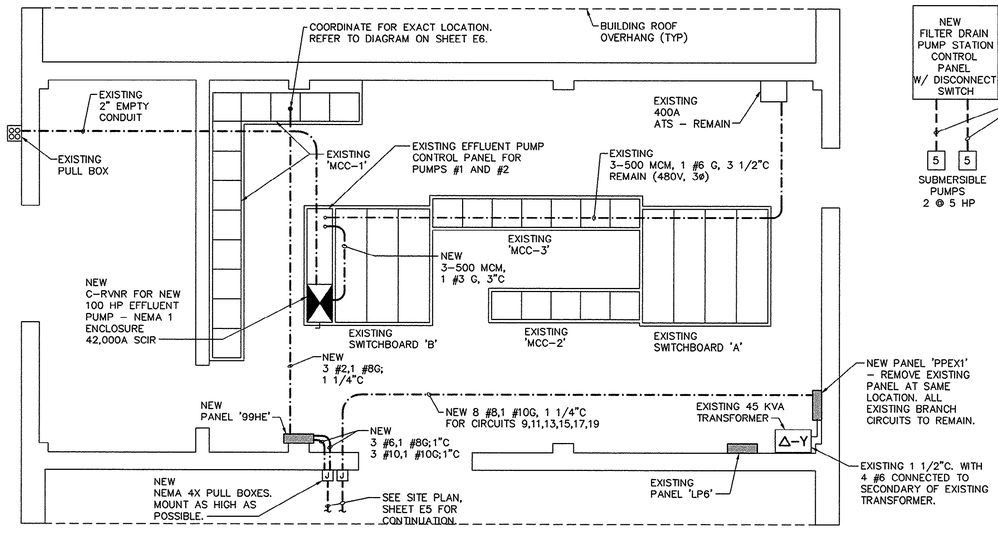

ELECTRICAL BUILDING PLAN

SCALE: 1/4" = 1'-0"

THESE DRAWINGS REFLECT
AS-BUILT
CONDITIONS

REVIEWED BY: _____ INSPECTIONS DATE
REVIEWED BY: _____ ENGINEERING DATE

GRAND STRAND WATER AND SEWER AUTHORITY

REVISIONS			
SYM.	DESCRIPTION	DATE	BY
	AS-BUILT	8/27/01	CAR

SOUTH CAROLINA PROFESSIONAL ENGINEER REGISTERED NO. 12763 DAVID L. LAPP 99042

HOBBS, UPCHURCH & ASSOCIATES, P.A.
CONSULTING ENGINEERS
MYRTLE BEACH, SOUTH CAROLINA 29577

SCHWARTZ W.W.T.P. POWER RISER DIAGRAM

TIP-TOP TREE FARM EFFLUENT LAND APPLICATION PROJECT

GRAND STRAND WATER AND SEWER AUTHORITY

DATE:	SEPTEMBER 8, 1999
DESIGNED:	DL
DRAWN:	D.B.M.
CHECKED:	DL
SCALE:	AS SHOWN
SHEET NO.	E6
OF:	10

45-003-0419/53

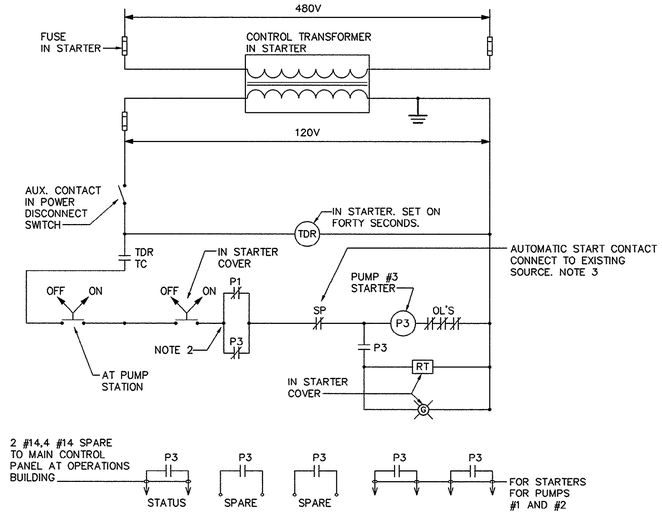

NEW EFFLUENT PUMP CONTROL WIRING DIAGRAM

NOT TO SCALE

NOTES:

1. NEW PUMP CONTROLS SHALL BE INTERLOCKED WITH EXISTING PUMP CONTROLS SO THAT AT ANY TIME NOT MORE THAN TWO 100 HP PUMPS ARE IN OPERATION AT THE SAME TIME.
2. ADD AUXILIARY RELAY AND CONTACTS TO BLOWERS #1, #2, AND #3 STARTING CIRCUITS TO ACCOMPLISH INTERLOCK WITH BLOWER #4.
3. PROVIDE AUXILIARY RELAY AN CONTACTS TO OBTAIN CONTACT FOR AUTOMATIC START/STOP.
4. PROVIDE PILOT LIGHT IN EXISTING CONSOLE AT OPERATIONS BUILDING TO INDICATE PUMP RUNNING.

CONTROL WIRING DIAGRAM LEGEND

- NORMALLY OPEN CONTACT.
- NORMALLY CLOSED CONTACT.
- (TDR) TIME DELAY ON ENERGIZATION RELAY. RANGE OF 0–200 SECONDS.
- TDR TC — TIME DELAY RELAY CONTACT – TIMES CLOSED.
- OFF ON — MAINTAINED CONTACT SELECTOR SWITCH.
- RT — RUN TIME METER.
- GREEN PILOT LIGHT.
- RED PILOT LIGHT.
- SP — CONTACTS FROM SINGLE PHASE RELAY IN STARTER.

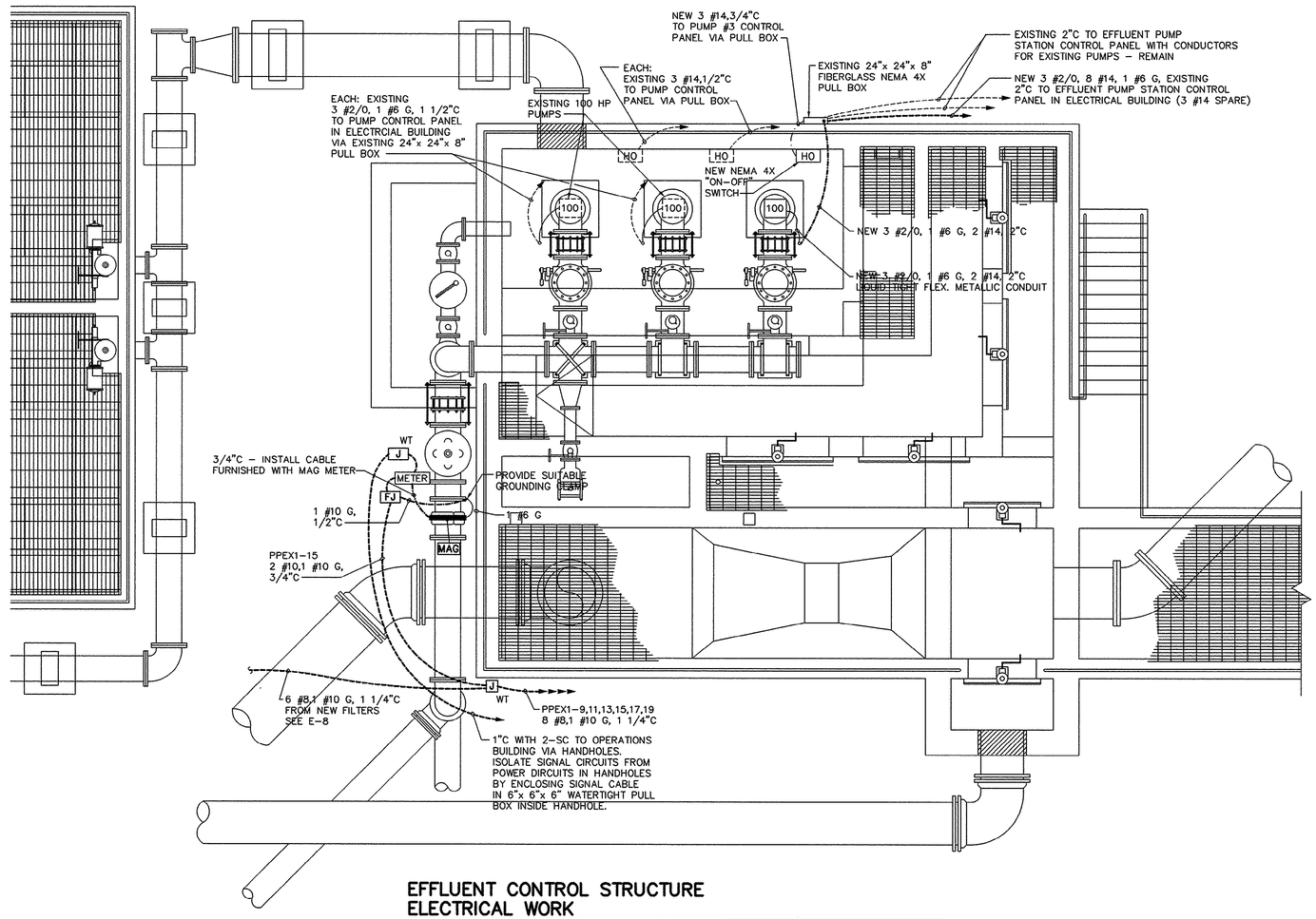

EFFLUENT CONTROL STRUCTURE ELECTRICAL WORK

SCALE: 1/4" = 1'–0"

NOTES:

1. ALL WORK SHOWN IS NEW, EXCEPT AS OTHERWISE NOTED.

THESE DRAWINGS REFLECT
AS–BUILT
CONDITIONS

REVIEWED BY: _____
INSPECTIONS DATE

REVIEWED BY: _____
ENGINEERING DATE

GRAND STRAND WATER AND SEWER AUTHORITY

REVISIONS			
SYM.	DESCRIPTION	DATE	BY
	AS–BUILT	8/27/01	CAR

SOUTH CAROLINA PROFESSIONAL ENGINEER REGISTERED NO. 12783 DAMIAN C. BRECE 99042

HOBBS, UPCHURCH & ASSOCIATES, P.A.
CONSULTING ENGINEERS
MYRTLE BEACH, SOUTH CAROLINA 29577

SCHWARTZ W.W.T.P.
EFFLUENT CONTROL STRUCTURE ELECTRICAL WORK

TIP–TOP TREE FARM
EFFLUENT LAND APPLICATION PROJECT
GRAND STRAND WATER AND SEWER AUTHORITY

DATE:	SEPTEMBER 8, 1999
DESIGNED:	DL
DRAWN:	D.B.M.
CHECKED:	DL
SCALE:	AS SHOWN
SHEET NO.	E7
OF:	10

45-003-0~~01~~50/53

HOBBS, UPCHURCH & ASSOC. MB J:\GS9901\800\820\ELECT\E7.dwg EDITED BY: ARABON DATE: 08/29/01 TIME: 11:43 XREFS: J:\GS9901\800\825\ELECT\X-TITLE.dwg Layout: Model

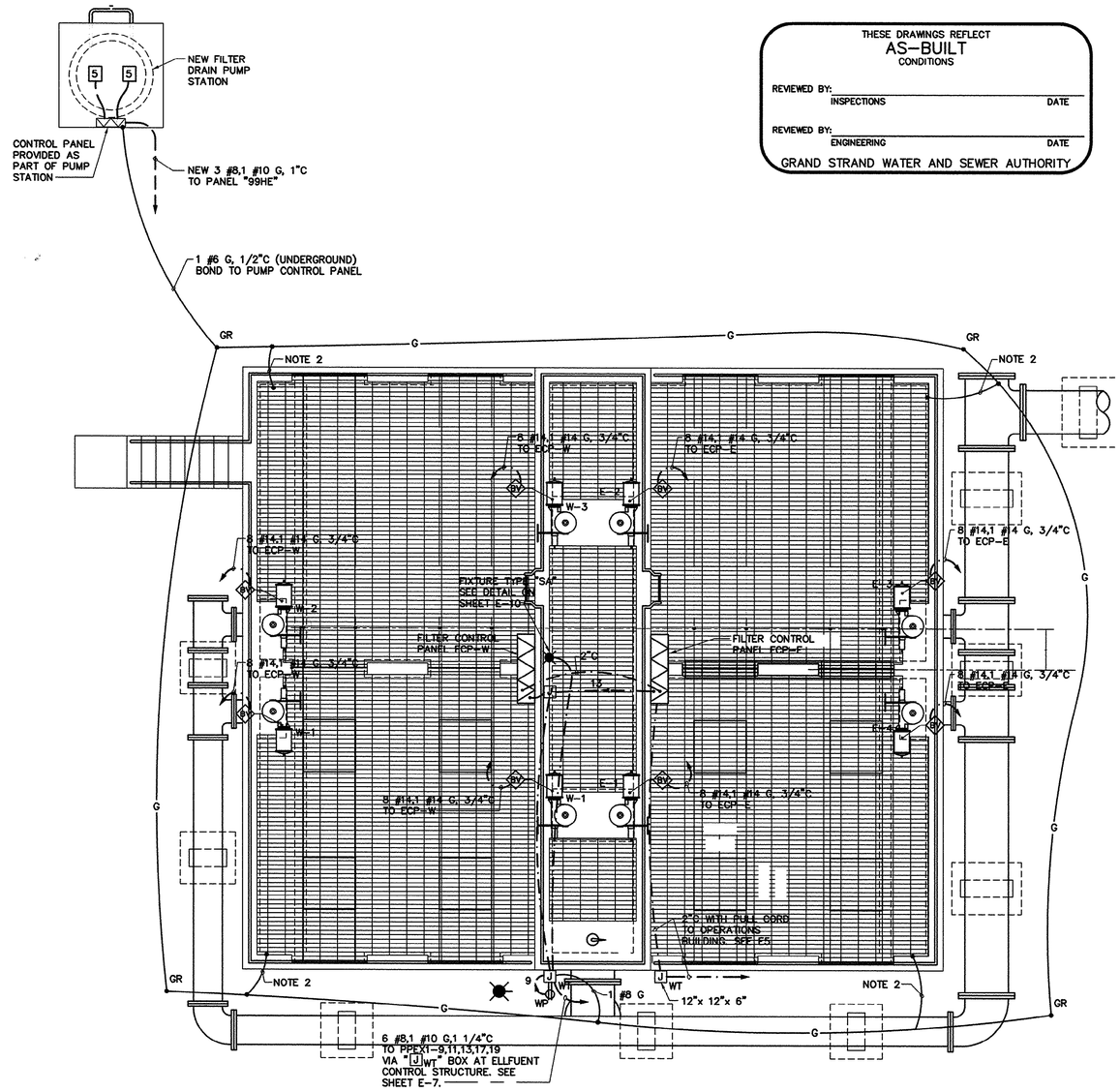

THESE DRAWINGS REFLECT
AS-BUILT
CONDITIONS

REVIEWED BY: _____
INSPECTIONS DATE

REVIEWED BY: _____
ENGINEERING DATE

GRAND STRAND WATER AND SEWER AUTHORITY

DEEP BED SAND FILTERS – ELECTRICAL WORK

SCALE: 1/4" = 1'-0"

NOTES:
1. RUN CONDUIT ALONG STRUCTURAL MEMBERS OF FILTER AND UNDER GRATING. CONDUIT ABOVE GRADE SHALL BE PVC COATED RGSC.
2. BOND STRUCTURAL NETAL TO GROUND RING UTILIZING #2 AWG THWN CONDUCTOR AND SUITABLE CU/AL GROUND CONDUCTOR.

REVISIONS

STM.	DESCRIPTION	DATE	BY
	AS-BUILT	8/27/01	CAR

SOUTH CAROLINA PROFESSIONAL ENGINEER REGISTERED NO. 12785 DAMASO LOPEZ 99042

HOBBS, UPCHURCH & ASSOCIATES, P.A.
CONSULTING ENGINEERS
MYRTLE BEACH, SOUTH CAROLINA 29577

SCHWARTZ W.W.T.P.
DEEP BED SAND FILTERS
ELECTRICAL WORK

TIP-TOP TREE FARM
EFFLUENT LAND
APPLICATION PROJECT
GRAND STRAND WATER
AND SEWER AUTHORITY

DATE:	SEPTEMBER 8, 1999
DESIGNED:	DL
DRAWN:	D.B.M.
CHECKED:	DL
SCALE:	AS SHOWN
SHEET NO.	E8
OF:	10

45-003-06 #153

HOBBS, UPCHURCH & ASSOC. MB J:\GS9901\800\820\ELECT\E8.dwg EDITED BY: APABON DATE: 08/29/01 TIME: 11:56 XREFS: J:\GS9901\800\825\ELECT\X-TITLE.dwg Layout: Model

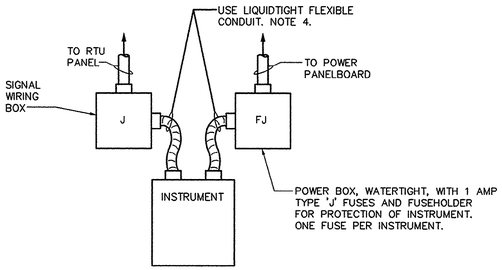

TYPICAL INSTRUMENT CONNECTION REQUIREMENTS

NOT TO SCALE

NOTES:
1. ALL BOXES SHALL BE CAST METAL TYPE WITH HUBS.
2. ALL CONNECTIONS SHALL BE WATERTIGHT.
3. SUPPORT BOXES INDEPENDANTLY OF INSTRUMENT.
4. PRIOR TO RUNNING FINAL CONDUIT VERIFY SIZE OF CONDUIT HUBS IN INSTRUMENTATION ENCLOSURE.

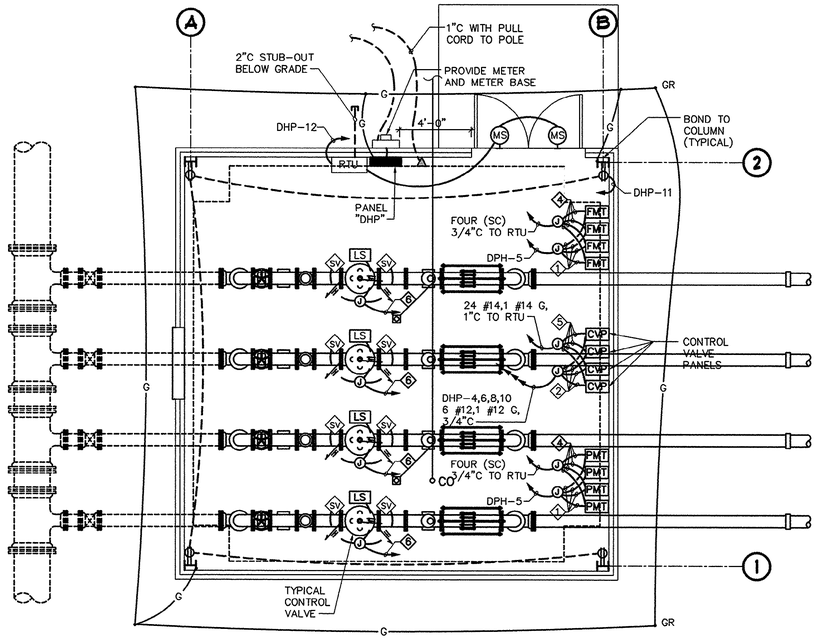

DISTRIBUTION HEATER LAYOUT BUILDING PLAN POWER AND SIGNAL PLAN

SCALE: 1/4" = 1'-0"

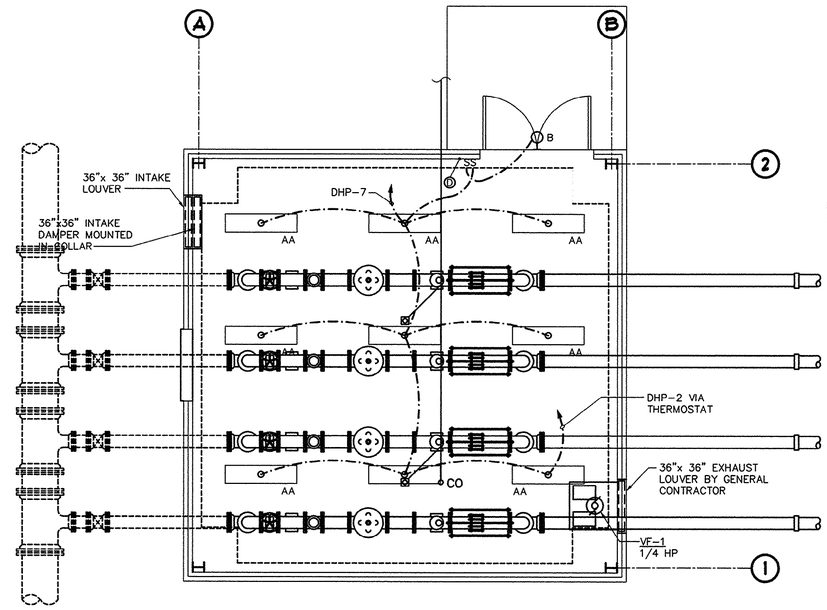

DISTRIBUTION HEATER LAYOUT BUILDING PLAN POWER AND SIGNAL PLAN

SCALE: 1/4" = 1'-0"

LOAD (KVA) PH1	LOAD (KVA) PH2	DESCRIPTION	WIRE SIZE	BRKR RAT'G	CKT. NO.	CKT. NO.	BRKR RAT'G	WIRE SIZE	DESCRIPTION	LOAD (KVA) PH1	LOAD (KVA) PH2
0.0		LIGHTNING ARRESTER	8	30/2	1	2	15/1	.	VF-1 - 1/4 HP	0.0	
	0.0	.	8	.	3	4	15/1	.	C.V. PANEL #1		0.2
0.1		PRESS. TRANSMITTER	12	15/1	5	6	15/1	.	C.V. PANEL #2	0.2	
	1.1	LIGHTING	12	20/1	7	8	15/1	.	C.V. PANEL #3		0.2
0.1		FLOW METER	12	20/1	9	10	15/1	.	C.V. PANEL #4	0.2	
	0.8	RECEPTACLE	12	20/1	11	12	15/1	.	RTU		0.2
0.0		SPARE	.	20/1	13	14	20/1	.	SPARE	0.0	
	0.0	SPARE	.	20/1	15	16	20/1	.	SPARE		0.0
0.0		SPARE	.	20/1	17	18	20/1	.	SPARE	0.0	
	0.0	SPARE	.	20/1	19	20	20/1	.	SPARE		0.0
0.0		SPARE	.	20/1	21	22	20/1	.	SPARE	0.0	
	0.0	SPARE	.	20/1	23	24	20/1	.	SPARE		0.0
0.0		SPARE	.	20/1	25	26	20/1	.	SPARE	0.0	
	0.0	SPARE	.	20/1	27	28	20/1	.	SPARE		0.0
0.0		SPARE	.	20/1	29	30	20/1	.	SPARE	0.0	
		.	.	.	31	32	.	.	.		
		.	.	.	33	34	.	.	.		
		.	.	.	35	36	.	.	.		
		.	.	.	37	38	.	.	.		
		.	.	.	39	40	.	.	.		
		.	.	.	41	42	.	.	.		

TYPE: BRANCH CIRCUIT
MOUNTING: SURFACE
SUPPLY: 120/240V, 1-PH, 3W
MAINS: 100A MCB
SCIR: 10,000A
NOTES:
1. PROVIDE EQUIPMENT GROUND BUS.
2. SUITABLE FOR USE AS SERVICE ENTRANCE.

GROSS PHASE TOTALS
PH1= 0.6 KVA
PH2= 2.5 KVA

CONNECTED LOAD

LIGHTING	1.1 KVA
HEATING	0.0 KVA
A/C MOTORS & HEAT PUMPS	0.0 KVA
AIR HANDLING & EXH FANS	0.0 KVA
RECEPTACLES	0.8 KVA
ELECTRIC WATER HEATING	0.0 KVA
ELEVATORS	0.0 KVA
FOOD PROCESSING	0.0 KVA
PROCESS	0.0 KVA
MISCELLANEOUS	1.2 KVA
TOTAL	3.1 KVA

PANEL 'DHP'

THESE DRAWINGS REFLECT
AS-BUILT
CONDITIONS

REVIEWED BY: _____
INSPECTIONS DATE

REVIEWED BY: _____
ENGINEERING DATE

GRAND STRAND WATER AND SEWER AUTHORITY

ACTION NOTES LEGEND

1. CONNECT EACH FLOW METER TRANSMITTER TO CIRCUIT DHP-9. SEE TYPICAL DETAIL ON THIS SHEET.
2. CONNECT EACH CONTROL VALVE PANEL TO A SEPARATE CIRCUIT.
3. CONNECT EACH PRESSURE TRANSMITTER TO A CIRCUIT DHP-5. SEE TYPICAL DETAIL ON THIS SHEET.
4. PROVIDE A SC CABLE FROM RTU TO EACH FLOW METER TRANSMITTER AND EACH PRESSURE TRANSMITTER.
5. PROVIDE 4 #14,2 #14 SPARE, 1 #14 G IN CONDUIT FROM EACH CONTROL VALVE PANEL TO RTU.
6. PROVIDE 6 #14,3 #14 SPARE, 12 #4 G, 3/4"C FROM EACH VALVE TO CONTROL VALVE PANEL " CCP "

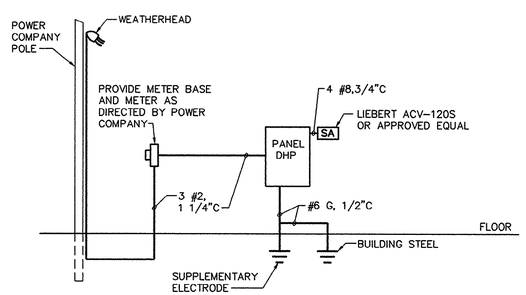

DISTRIBUTION HEADER BUILDING POWER RISER DIAGRAM

NOT TO SCALE

VENTILATION SCHEDULE DISTRIBUTION HEADER BUILDING

VENT FAN VF-1	CFM-1500, STATIC 0.375" W.C., RPM-835, HP-1/4, 115 VOLTS/1 PHASE, WITH WALL MOUNTING COLLAR, GRAVITY BACKDRAFT DAMPER AND MOTOR SIDE FAN GUARD, DAMPER SIZE - 26"x 26", WALL OPENING REQUIRED-33 3/4"x 33 3/4".
INTAKE LOUVER	36"x 36" LOUVER GRAVITY INTAKE DAMPER
FAN LOUVER	36"x 36" FAN LOUVER WITH GRAVITY EXHAUST DAMPER

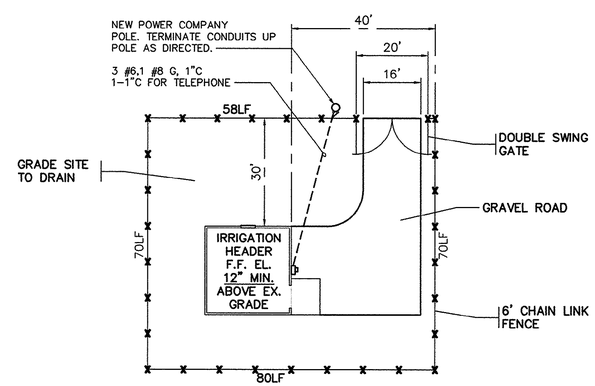

IRRIGATION HEADER BUILDING - ELECTRICAL

SCALE: 1" = 20'-0"

45-003-05 2/53

REVISIONS			
SYM.	DESCRIPTION	DATE	BY
	AS-BUILT	8/27/01	CAR

SOUTH CAROLINA PROFESSIONAL ENGINEER REGISTERED NO. 12783 DAVID LOVETT

99042

HOBBS, UPCHURCH & ASSOCIATES, P.A.
CONSULTING ENGINEERS
MYRTLE BEACH, SOUTH CAROLINA 29577

HEADER BUILDING ELECTRICAL PLANS AND DETAILS

TIP-TOP TREE FARM EFFLUENT LAND APPLICATION PROJECT
GRAND STRAND WATER AND SEWER AUTHORITY

DATE:	SEPTEMBER 8, 1999
DESIGNED:	DL
DRAWN:	D.B.M.
CHECKED:	DL
SCALE:	AS SHOWN

SHEET NO. E9
OF: 10

HOBBS, UPCHURCH & ASSOC. MB J:\GS9901\800\820\ELECT\E9.dwg EDITED BY: ARABON DATE: 08/29/01 TIME: 11:58 XREFS: J:\GS9901\800\825\ELECT\X-TITLE.dwg Layout: Model

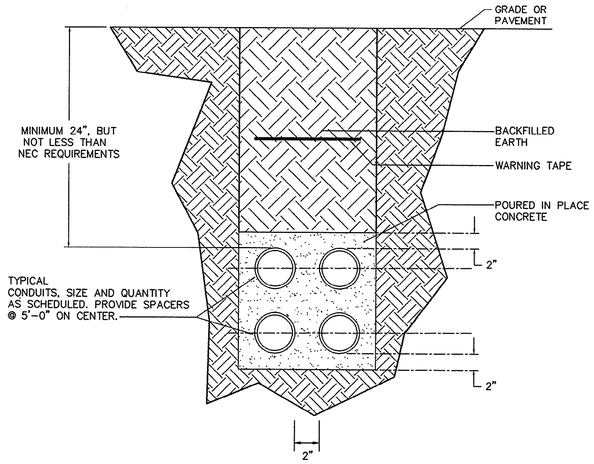

TYPICAL SECTION THROUGH MAJOR CONDUIT RUN

NOT TO SCALE

NOTES:
1. CONCRETE ENCASEMENT IS ONLY REQUIRED AS MARKED ON SITE PLAN SHEET E5, FOR MAIN CONDUIT RUNS.

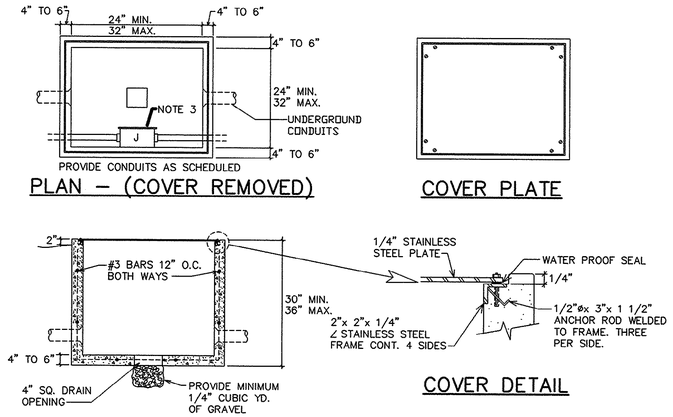

TYPICAL HANDHOLE "HH" DETAILS

NOT TO SCALE

NOTES:
1. PRECAST CONCRETE HANDHOLES ARE ACCEPTABLE PROVIDED THAT THEY ARE BUILT IN ACCORDANCE WITH SPECIFICATIONS AND REQUIREMENTS SHOWN IN THIS DETAIL.
2. EXACT DIMENSIONS OF HANDHOLES SHALL BE AS REQUIRED TO MEET N.E.C. REQUIREMENTS FOR STRAIGHT OR ANGLE CABLE PULLS, AS APPLICABLE.
3. PROVIDE 6"x 6"x 6" WATERTIGHT NEMA 4X PULL BOX FOR SIGNAL CIRCUITS (SC" CABLES).

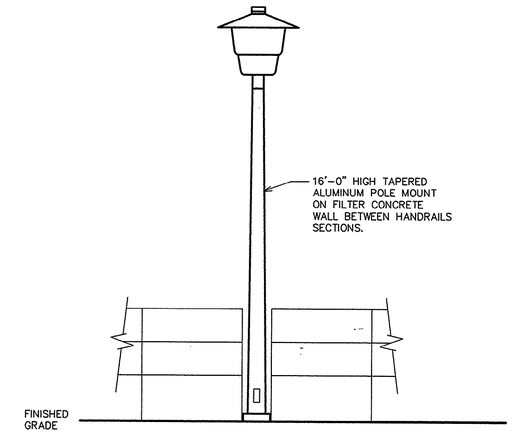

TYPE 'SA' FIXTURE DETAIL

NOT TO SCALE

NOTES:
1. INSTALL FIXTURE ON CONCRETE WALL. COORDINATE WITH GENERAL CONTRACTOR FOR CASTING ANCHOR BOLTS INTO THE CONCRETE WALL.

THESE DRAWINGS REFLECT
AS-BUILT
CONDITIONS

REVIEWED BY: _____
INSPECTIONS DATE

REVIEWED BY: _____
ENGINEERING DATE

GRAND STRAND WATER AND SEWER AUTHORITY

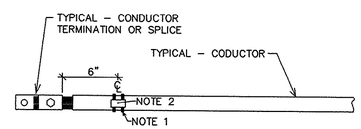

DETAIL OF IDENTIFICATION OF CONDUCTORS

NOT TO SCALE

NOTES:
1. SELF LOCKING T & B NYLON TY-RAP TIE PLACED ON CONDUCTOR AT A LOCATION LEGIBLE FROM THE OPENING OF THE ENCLOSURE.
2. MARK IDENTIFICATION USING T & B #WT163M-3 RED PERMINENT MARKING PEN.

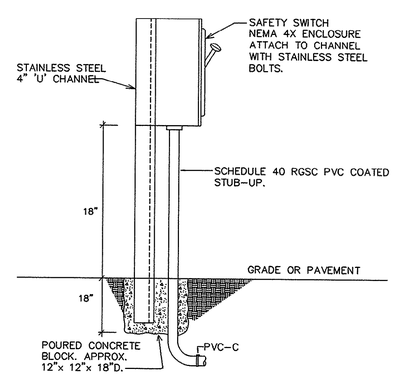

TYPICAL FIELD DISCONNECT SUPPORT

NOT TO SCALE

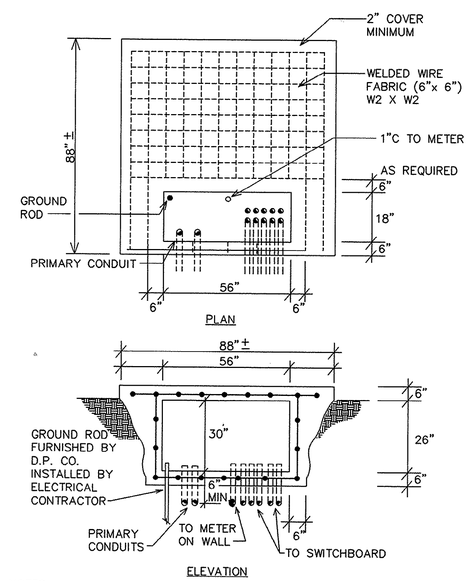

NOTES:
1. CONCRETE TO BE 3,000 LBS. GRADE.
2. ALL DIMENSIONS ARE APPROXIMATE. CONTRACTOR SHALL ADJUST DIMENSIONS TO FIT TRANSFORMER ORDERED.
3. COORDINATE WITH POWER CO. FOR EXACT DIMENSIONS AND PIT CONFIGURATION.

PAD MOUNTED TRANSFORMER CONCRETE PAD

NOT TO SCALE

REVISIONS

SYM.	DESCRIPTION	DATE	BY
	AS-BUILT	8/27/01	CAR

SOUTH CAROLINA PROFESSIONAL ENGINEER REGISTERED No. 12783 CERTIFIED DAMAGED

99042

HOBBS, UPCHURCH & ASSOCIATES, P.A.
CONSULTING ENGINEERS
MYRTLE BEACH, SOUTH CAROLINA 29577

MISCELLANEOUS DETAILS

TIP-TOP TREE FARM EFFLUENT LAND APPLICATION PROJECT
GRAND STRAND WATER AND SEWER AUTHORITY

DATE:	SEPTEMBER 8, 1999
DESIGNED:	DL
DRAWN:	D.B.M.
CHECKED:	DL
SCALE:	AS SHOWN
SHEET NO.	E10
OF:	10

45-003-052/53

HOBBS, UPCHURCH & ASSOC. MB J:\GS9901\800\820\ELECT\E10.dwg EDITED BY: ARABON DATE: 08/29/01 TIME: 11:58 XREFS: J:\GS9901\800\825\ELECT\X-TITLE.dwg Layout: Model